REVISION			
DRN XY	CHK KR	APP KR	REV 00
DRN DATE 04/13/2022	CHK DATE 04/13/2022	APP DATE 04/13/2022	ECN#

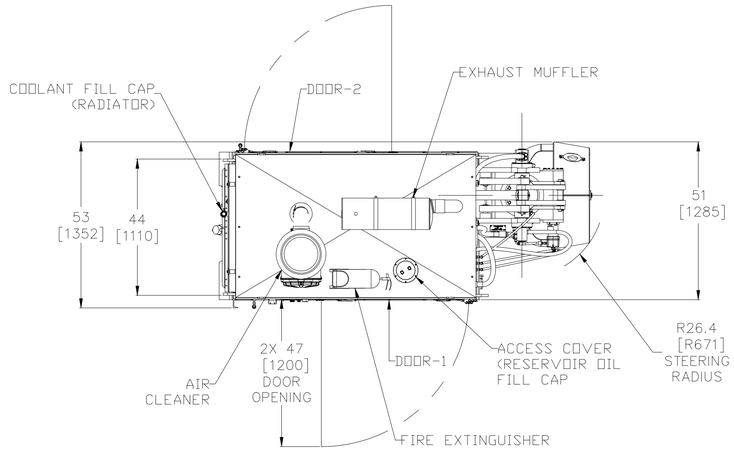

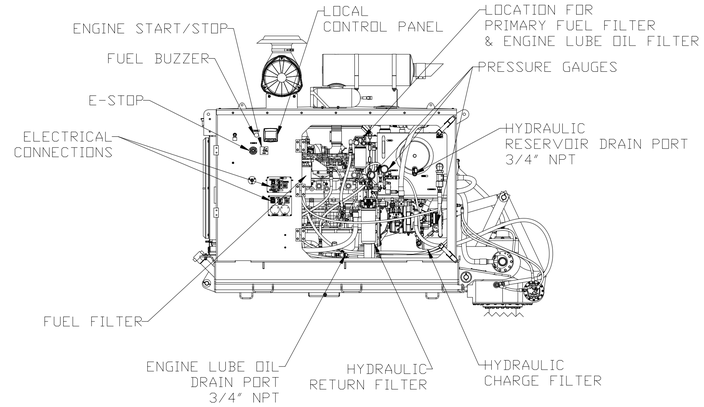

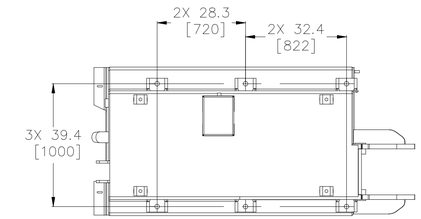

PLAN VIEW
OF SKID

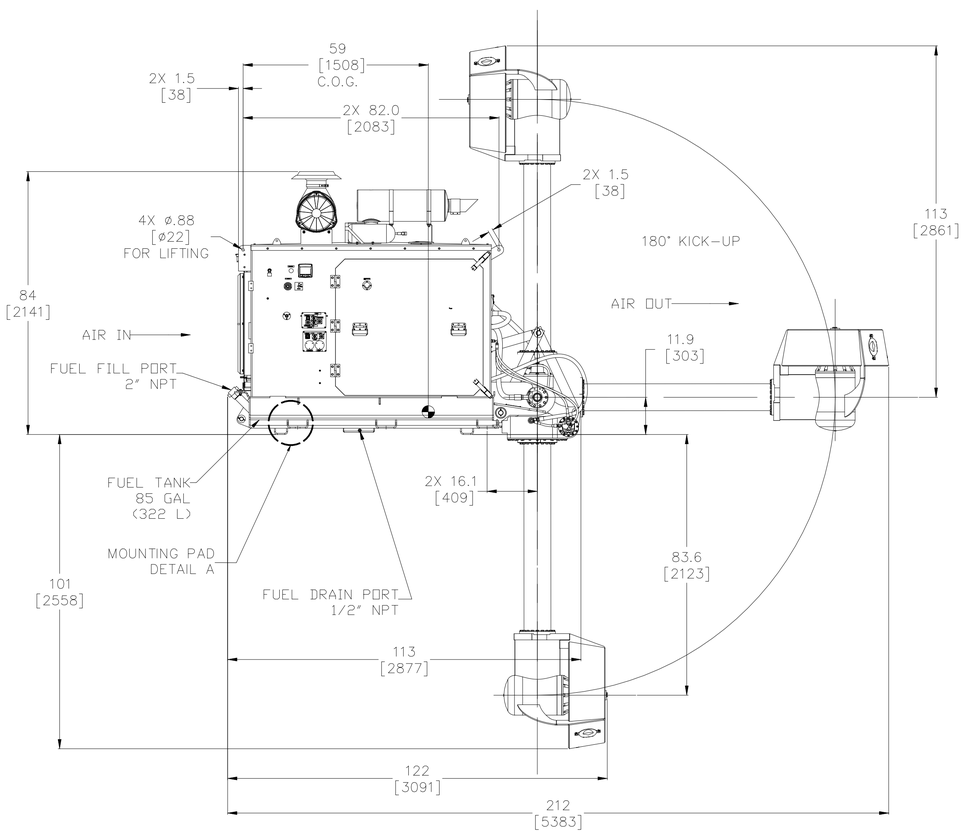

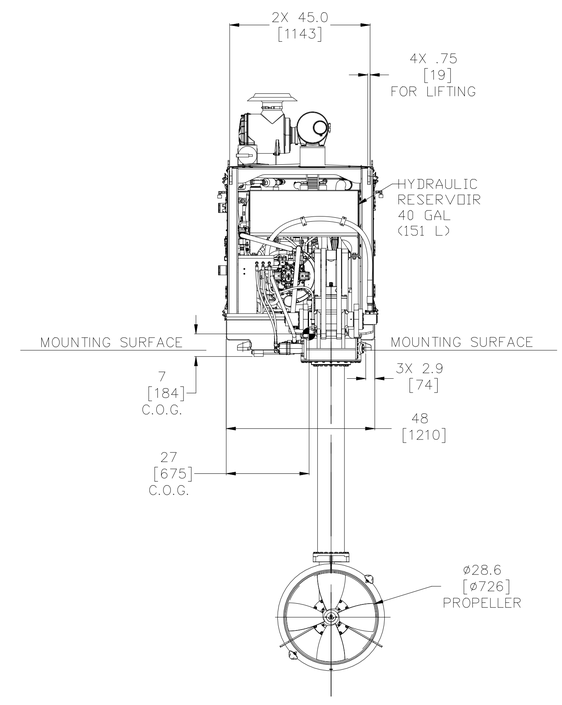

MOUNTING INTERFACE

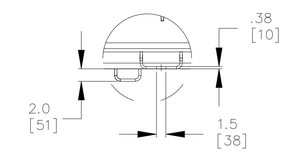

MOUNTING PAD 6X
DETAIL A
SCALE 1: 12

NOTES:

1. WEIGHT SHOWN IS ESTIMATED DRY WEIGHT ONLY.
2. RECORD ACTUAL WEIGHT PRIOR TO SHIPPING.

THRUSTMASTER OF TEXAS, INC.

PROPRIETARY INFORMATION OF THRUSTMASTER OF TEXAS, INC. THIS DOCUMENT AND THE INFORMATION CONTAINED HEREIN IS THE PROPERTY OF THRUSTMASTER OF TEXAS, INC. AND SHALL NOT BE REPRODUCED, DISTRIBUTED, DISCLOSED OR USED WITHOUT THE EXPRESS WRITTEN PERMISSION OF THRUSTMASTER OF TEXAS, INC. OR ANY AFFILIATED ENTITIES HERETO. THE INFORMATION CONTAINED HEREIN IS TRADE SECRET AND PROPRIETARY INFORMATION OF THRUSTMASTER OF TEXAS, INC. OR ANY AFFILIATED ENTITIES HERETO. THE INFORMATION CONTAINED HEREIN IS SUBJECT TO RESTRICTIONS AND OBLIGATIONS UNDER THE NON-DISCLOSURE AGREEMENT DATED 1/24/2022 BETWEEN THRUSTMASTER OF TEXAS, INC. AND THE AFFILIATED ENTITIES HERETO, WHICH MAY BE FURTHER DISCLOSED ONLY IN ACCORDANCE WITH THE TERMS SET FORTH IN THE NON-DISCLOSURE AGREEMENT. ANY USE OTHER THAN PERMITTED BY THE TERMS SET FORTH IN THE NON-DISCLOSURE AGREEMENT MAY BE THE BASIS FOR LEGAL ACTION.

THIRD ANGLE PROJECTION
DO NOT SCALE

DIMENSIONING CONVENTION
INCHES (mm)

TITLE	GA, OD150N, QSB6.7, 7FT, 24VDC		
SCALE 1/24	SIZE D	MATERIAL VARIOUS	DWG/PART NO. D130686
DWG REF D129996		FINISH PA-W-311	
DATE 65848	EST. WT. 7000 LBS [3175 KG]		REF CONTRACT NO. Y220153
			SHEET 1 OF 1