REVISION			
DRN	CHK	APP	REV
ECR	SV	SV	D
DRN DATE	CHK DATE	APP DATE	ECN#
06/12/2026	07/28/2026	07/28/2026	260033

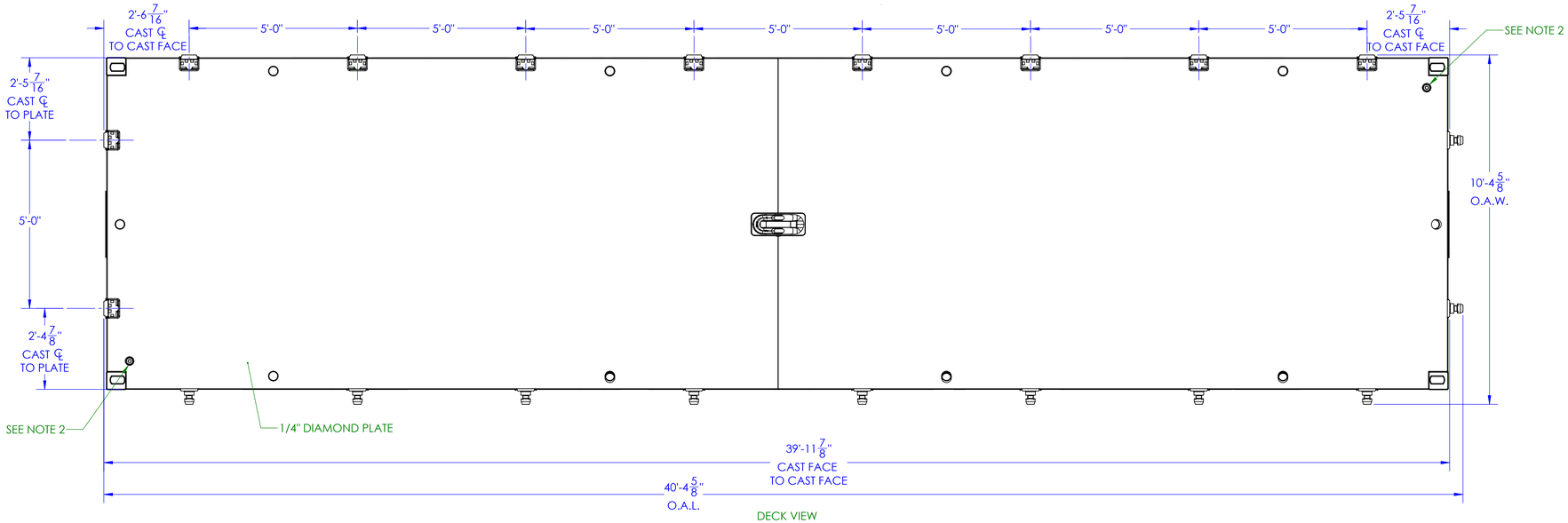

DECK VIEW

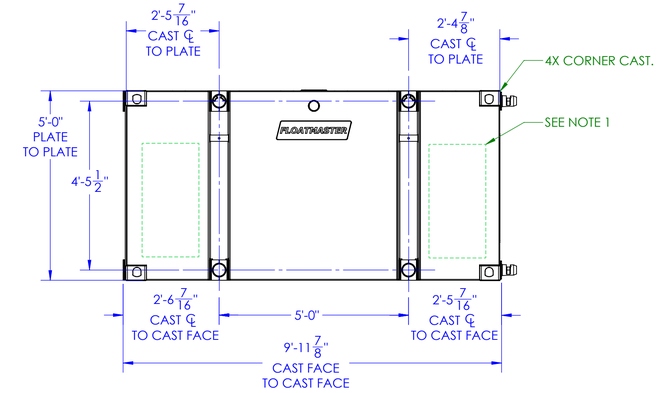

VIEW A-A
FEMALE END

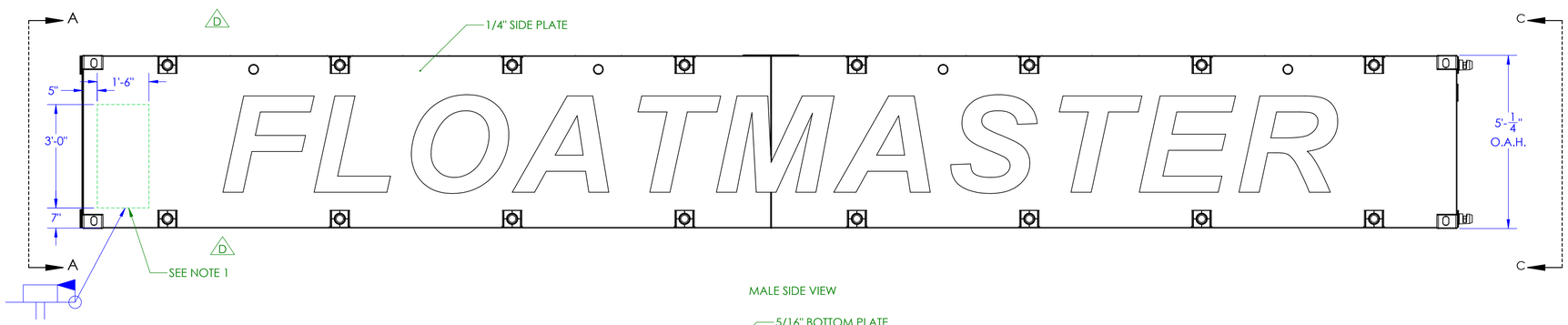

MALE SIDE VIEW

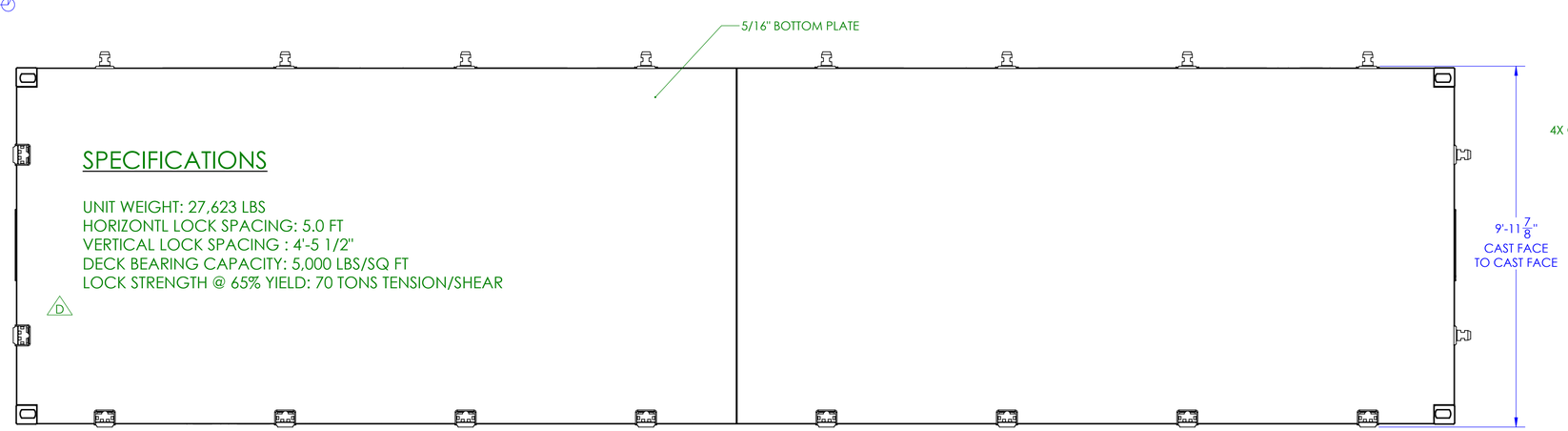

BOTTOM VIEW

SPECIFICATIONS

UNIT WEIGHT: 27,623 LBS
HORIZONTL LOCK SPACING: 5.0 FT
VERTICAL LOCK SPACING : 4'-5 1/2"
DECK BEARING CAPACITY: 5,000 LBS/SQ FT
LOCK STRENGTH @ 65% YIELD: 70 TONS TENSION/SHEAR

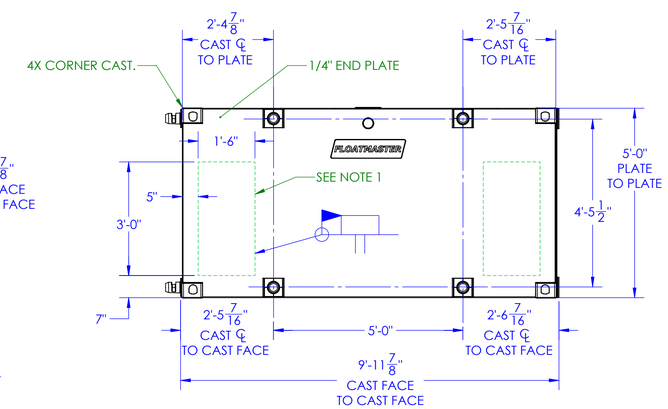

VIEW C-C
MALE END

NOTES:

1. TO ENTER FLOAT FOR INSPECTION OR REPAIR REMOVE FEMALE SIDE CORNER PLATES OR CUT OUT END/SIDE PANELS AS SHOWN. AFTER COMPLETION OF INSPECTION/REPAIR REPLACE PANEL, SEAL WELD, AND TEST FOR LEAKS AS DESCRIBED IN NOTE 2.

2. TEST FOR LEAKS BY APPLYING INTERNAL AIR PRESSURE OF 3 PSI MAXIMUM. BRUSH ALL EXTERNAL WELD SEAMS WITH WATER AND SOAP SOLUTION. LEAKS WILL BE DETECTED BY FORMATION OF SOAP BUBBLES.

THRUSTMASTER OF TEXAS, INC.

TITLE: GA, FM5400 40' X 10' X 5'

ALL DATA ON THIS DOCUMENT ARE PROPRIETARY AND MAY NOT BE USED, RELEASED, OR DISCLOSED WITHOUT THE EXPRESS WRITTEN CONSENT OF THRUSTMASTER OF TEXAS, INC., EXCEPT WHERE PROVIDED FOR IN THE LIMITED RIGHTS RELEASE TO THE UNITED STATES GOVERNMENT, IF ANY. © 1987 THRUSTMASTER OF TEXAS, INC.

THIRD ANGLE PROJECTION
DO NOT SCALE

DIMENSIONING CONVENTION
INCHES
(mm)

SCALE	SIZE	MATERIAL	DWG/PART NO.
1:48	D		D130325
ENG. REF.		FINISH	
D129934			
ORDER NO.	EST. WT.		PROJECT PART NO. / SHEET
65848	27623 LBS		FM210367 / 1 of 1

D:\TMOT\Library Parts\TMOT SW Manufactured Parts\D130325\