SURFACE FINISH		
SYM.	GRADE	Ra
~	N12	50.0
▽	N11	25.0
	N10	12.5
▽▽	N9	6.3
	N8	3.2
	N7	1.6
▽▽▽	N6	0.8
	N5	0.4
	N4	0.2

DO NOT SCALE DRAWING
PLEASE ASK, IF IN DOUBT

ALL DIMENSIONS ARE IN INCH
UNLESS OTHERWISE SPECIFIED

THIS DRAWING AND SPECIFICATION ARE EXCLUSIVE PROPERTY OF NIPHA EXPORTS PVT. LTD. UNAUTHORISED USE OR MAKING COPIES THERE OF WITHOUT PERMISSION ARE STRICTLY PROHIBITED.

PASS 29.50mm HEAT-TREATED SQUARE EDGE SQUARE BAR TO CHECK HOLE.

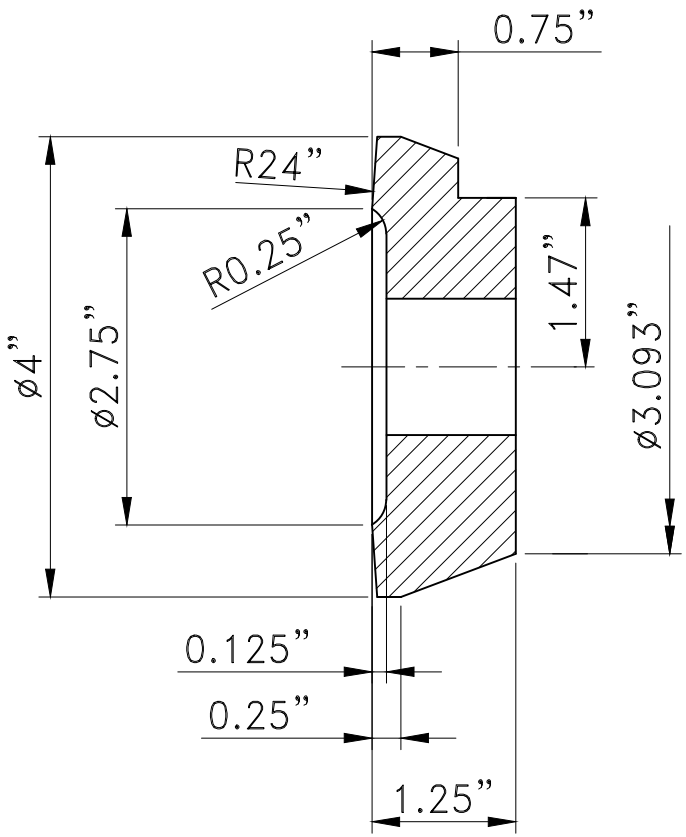

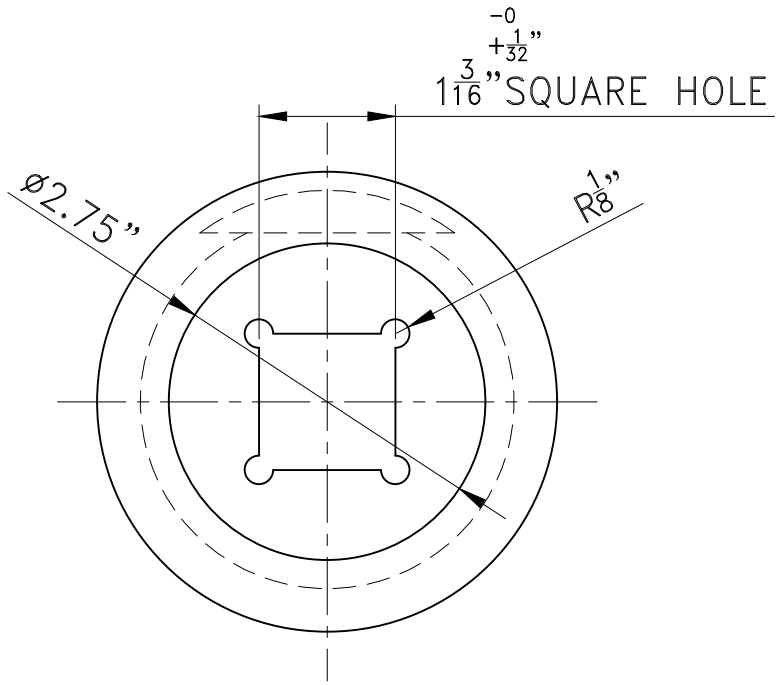

NOTE :-

MATERIAL GRADE 30 GRAY IRON.
ALL FILLETS & ROUNDS 1/8"R
GENERAL CASTING TOLERANCE DIMENSIONS +/- 1/32"
PAINT FINISH BLACK

2018	SIGN	DATE	MATL.:– SEE NOTE	WEIGHT:– 1.36kg	HARDNESS:– ·····	REF. DRG. NO.– –––
DRN	S.K.	07.02.18	TITLE: SMALL WASHER FOR 1-1/8" SQ.AXLE			DRG.NO.:– AS/MISC/204
CHKD						
APPD						

NIPHA EXPORTS PVT. LTD
PLOT NO. 29, SECTOR– 6, FARIDABAD
HARYANA

SCALE 1:1 | SHEET 1/1 | REV.NO. 00

D:\ENGG \CASTING\AS/MISC/204