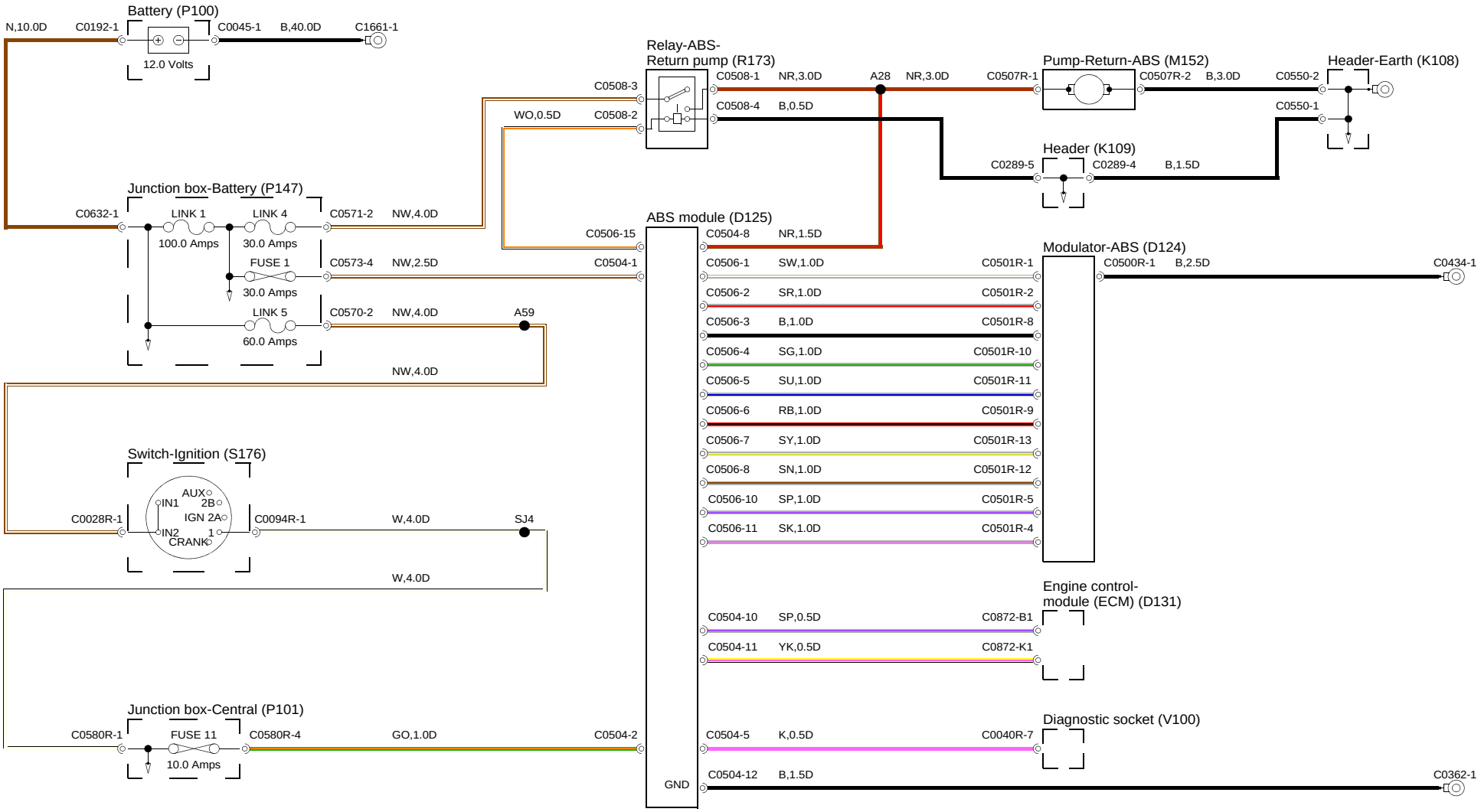
Battery (P100)
N,10.0D
C0192-1
C0045-1
B,40.0D
C1661-1
12.0 Volts
Relay-ABS-
Return pump (R173)
C0508-3
C0508-1
NR,3.0D
A28
NR,3.0D
C0507R-1
Pump-Return-ABS (M152)
C0507R-2
B,3.0D
C0550-2
Header-Earth (K108)
C0508-4
B,0.5D
C0550-1
WO,0.5D
C0508-2
Header (K109)
C0289-5
C0289-4
B,1.5D
Junction box-Battery (P147)
C0632-1
LINK 1
100.0 Amps
LINK 4
30.0 Amps
C0571-2
NW,4.0D
FUSE 1
30.0 Amps
C0573-4
NW,2.5D
LINK 5
60.0 Amps
C0570-2
NW,4.0D
A59
NW,4.0D
ABS module (D125)
C0506-15
C0504-8
NR,1.5D
C0504-1
C0506-1
SW,1.0D
C0501R-1
Modulator-ABS (D124)
C0500R-1
B,2.5D
C0434-1
C0506-2
SR,1.0D
C0501R-2
C0506-3
B,1.0D
C0501R-8
C0506-4
SG,1.0D
C0501R-10
C0506-5
SU,1.0D
C0501R-11
C0506-6
RB,1.0D
C0501R-9
C0506-7
SY,1.0D
C0501R-13
C0506-8
SN,1.0D
C0501R-12
C0506-10
SP,1.0D
C0501R-5
C0506-11
SK,1.0D
C0501R-4
Switch-Ignition (S176)
AUX
IN1
2B
IGN 2A
IN2
1
CRANK
C0028R-1
C0094R-1
W,4.0D
SJ4
W,4.0D
Engine control-
module (ECM) (D131)
C0504-10
SP,0.5D
C0872-B1
C0504-11
YK,0.5D
C0872-K1
Junction box-Central (P101)
C0580R-1
FUSE 11
10.0 Amps
C0580R-4
GO,1.0D
C0504-2
Diagnostic socket (V100)
C0504-5
K,0.5D
C0040R-7
GND
C0504-12
B,1.5D
C0362-1

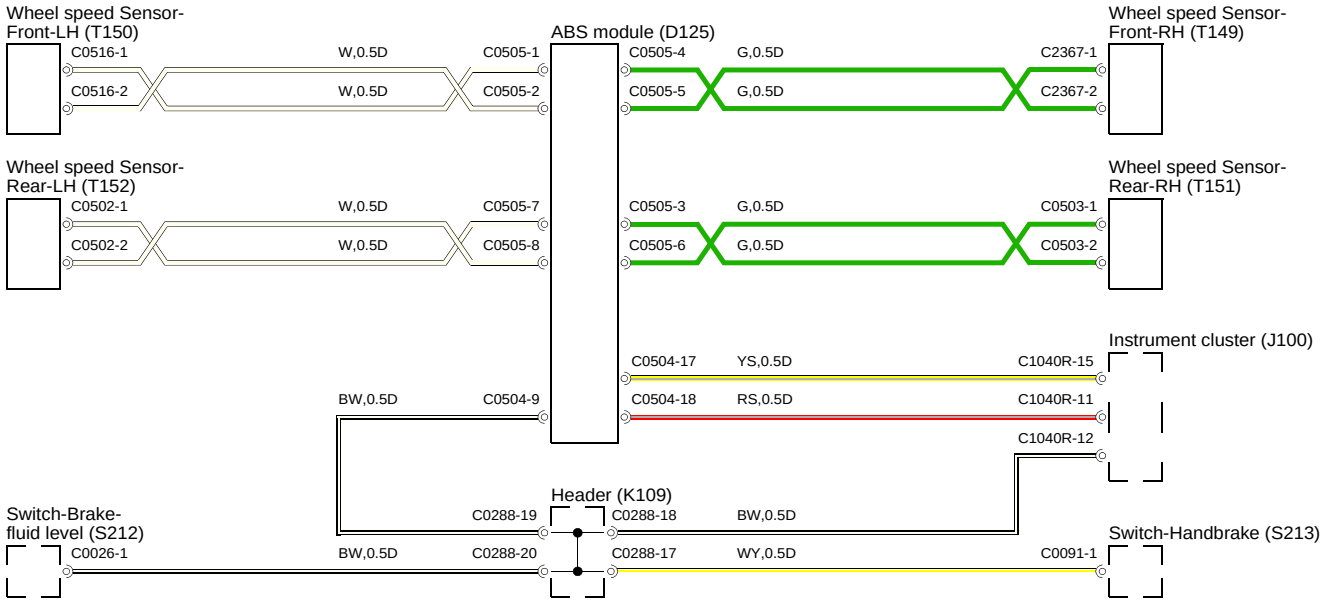
Wheel speed Sensor-
Front-LH (T150)
C0516-1
C0516-2
W,0.5D
W,0.5D
C0505-1
C0505-2
ABS module (D125)
C0505-4
C0505-5
G,0.5D
G,0.5D
C2367-1
C2367-2
Wheel speed Sensor-
Front-RH (T149)
Wheel speed Sensor-
Rear-LH (T152)
C0502-1
C0502-2
W,0.5D
W,0.5D
C0505-7
C0505-8
C0505-3
C0505-6
G,0.5D
G,0.5D
C0503-1
C0503-2
Wheel speed Sensor-
Rear-RH (T151)
Instrument cluster (J100)
C0504-17
YS,0.5D
C1040R-15
BW,0.5D
C0504-9
C0504-18
RS,0.5D
C1040R-11
C1040R-12
Header (K109)
Switch-Brake-
fluid level (S212)
C0288-19
C0288-18
BW,0.5D
C0026-1
BW,0.5D
C0288-20
C0288-17
WY,0.5D
C0091-1
Switch-Handbrake (S213)