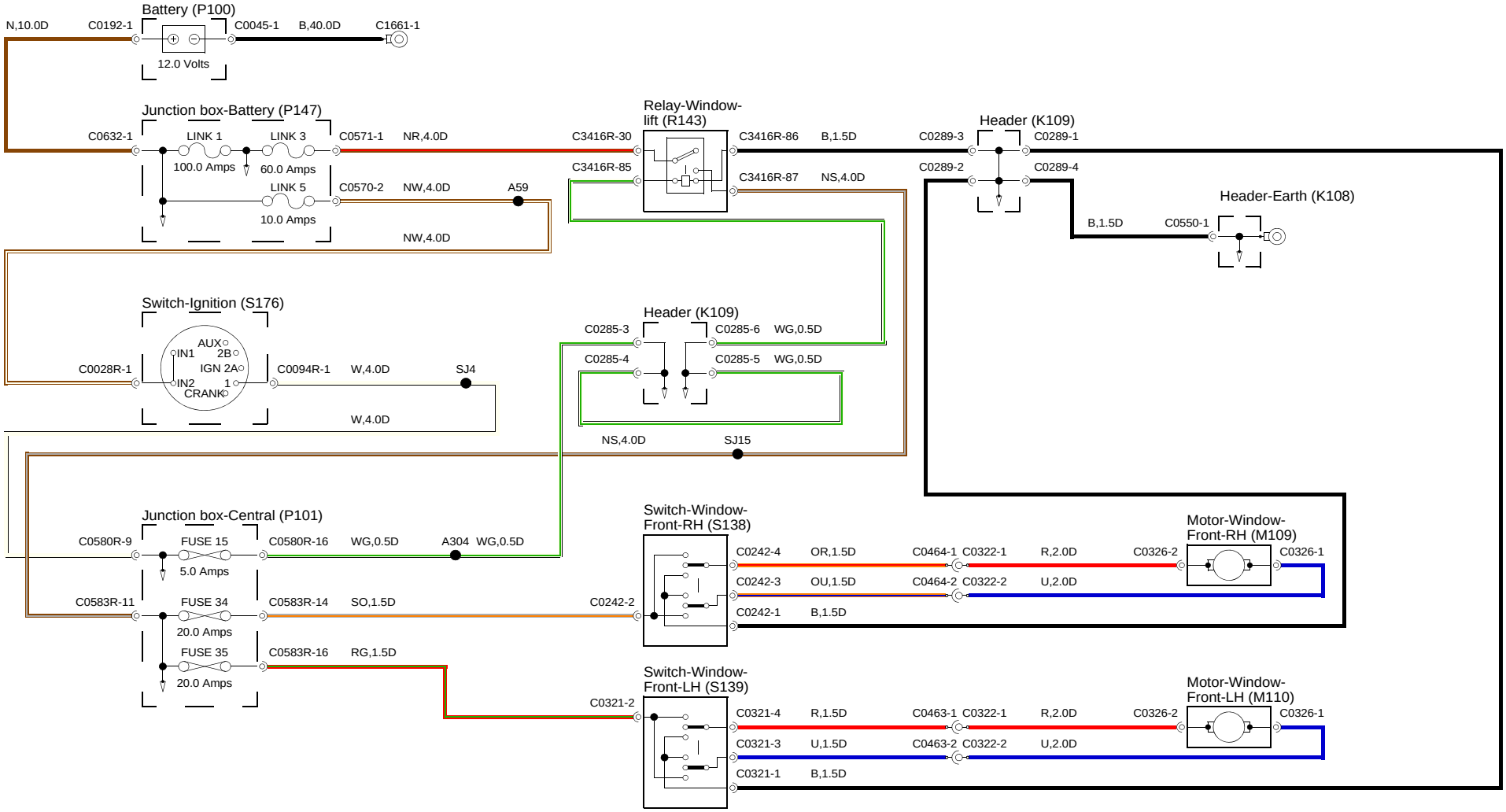
Battery (P100)
N,10.0D
C0192-1
C0045-1
B,40.0D
C1661-1
12.0 Volts
Junction box-Battery (P147)
C0632-1
LINK 1
LINK 3
100.0 Amps
60.0 Amps
C0571-1
NR,4.0D
LINK 5
10.0 Amps
C0570-2
NW,4.0D
A59
NW,4.0D
Relay-Window-lift (R143)
C3416R-30
C3416R-85
C3416R-86
B,1.5D
C3416R-87
NS,4.0D
Header (K109)
C0289-3
C0289-1
C0289-2
C0289-4
Header-Earth (K108)
B,1.5D
C0550-1
Switch-Ignition (S176)
AUX
2B
IN1
IGN 2A
IN2
1
CRANK
C0028R-1
C0094R-1
W,4.0D
SJ4
W,4.0D
Header (K109)
C0285-3
C0285-6
WG,0.5D
C0285-4
C0285-5
WG,0.5D
NS,4.0D
SJ15
Junction box-Central (P101)
C0580R-9
FUSE 15
5.0 Amps
C0580R-16
WG,0.5D
A304
WG,0.5D
C0583R-11
FUSE 34
20.0 Amps
C0583R-14
SO,1.5D
FUSE 35
20.0 Amps
C0583R-16
RG,1.5D
Switch-Window-Front-RH (S138)
C0242-2
C0242-4
OR,1.5D
C0464-1
C0322-1
R,2.0D
C0326-2
C0326-1
C0242-3
OU,1.5D
C0464-2
C0322-2
U,2.0D
C0242-1
B,1.5D
Motor-Window-Front-RH (M109)
Switch-Window-Front-LH (S139)
C0321-2
C0321-4
R,1.5D
C0463-1
C0322-1
R,2.0D
C0326-2
C0326-1
C0321-3
U,1.5D
C0463-2
C0322-2
U,2.0D
C0321-1
B,1.5D
Motor-Window-Front-LH (M110)