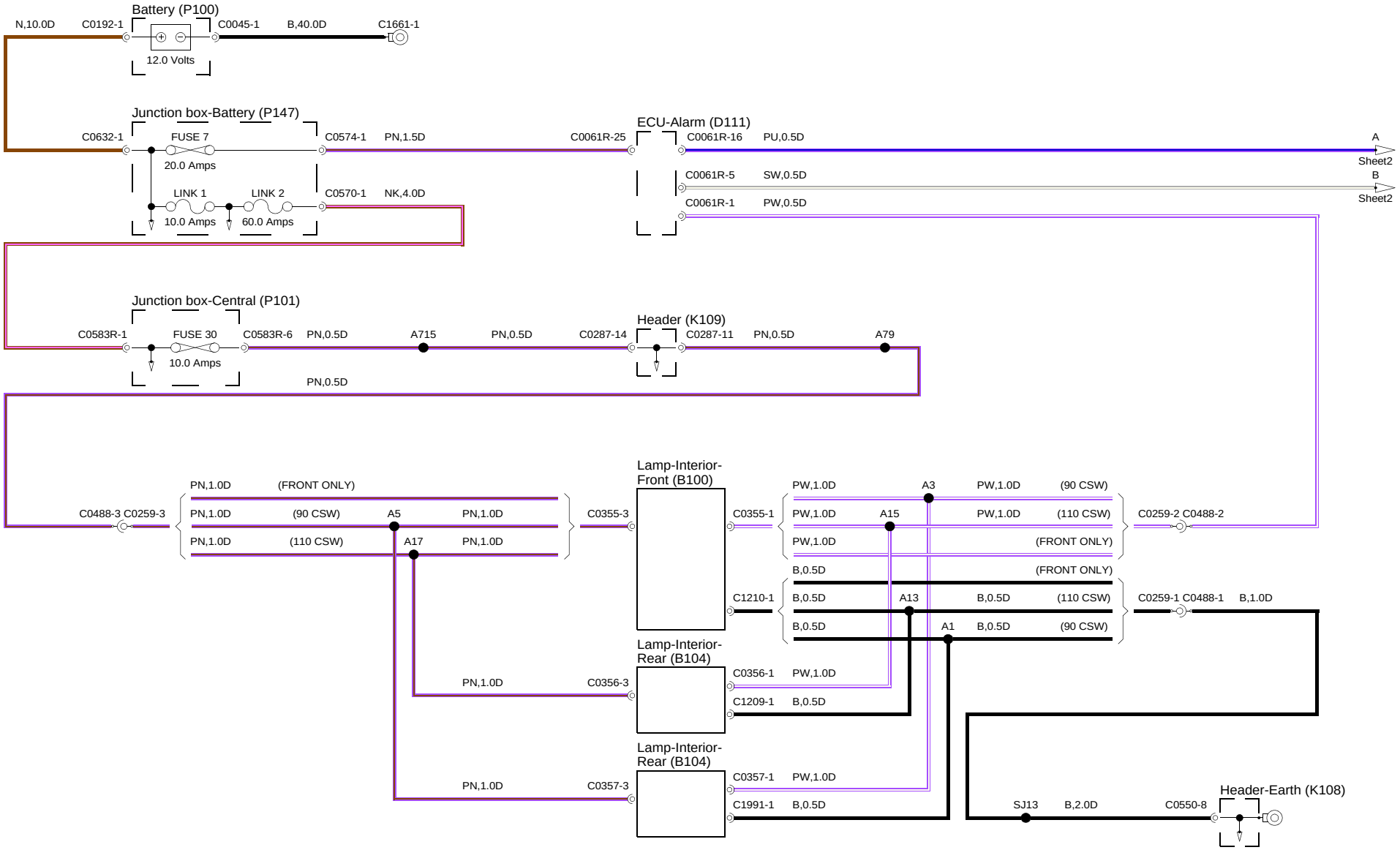
Battery (P100)
N,10.0D
C0192-1
C0045-1
B,40.0D
C1661-1
12.0 Volts
Junction box-Battery (P147)
C0632-1
FUSE 7
20.0 Amps
C0574-1
PN,1.5D
C0061R-25
LINK 1
LINK 2
10.0 Amps
60.0 Amps
C0570-1
NK,4.0D
ECU-Alarm (D111)
C0061R-16
PU,0.5D
A
Sheet2
C0061R-5
SW,0.5D
B
Sheet2
C0061R-1
PW,0.5D
Junction box-Central (P101)
C0583R-1
FUSE 30
10.0 Amps
C0583R-6
PN,0.5D
A715
PN,0.5D
C0287-14
Header (K109)
C0287-11
PN,0.5D
A79
PN,0.5D
C0488-3 C0259-3
PN,1.0D
(FRONT ONLY)
PN,1.0D
(90 CSW)
A5
PN,1.0D
PN,1.0D
(110 CSW)
A17
PN,1.0D
C0355-3
Lamp-Interior-Front (B100)
C0355-1
PW,1.0D
A3
PW,1.0D
(90 CSW)
PW,1.0D
A15
PW,1.0D
(110 CSW)
PW,1.0D
(FRONT ONLY)
C0259-2 C0488-2
B,0.5D
(FRONT ONLY)
C1210-1
B,0.5D
A13
B,0.5D
(110 CSW)
B,0.5D
A1
B,0.5D
(90 CSW)
C0259-1 C0488-1
B,1.0D
Lamp-Interior-Rear (B104)
PN,1.0D
C0356-3
C0356-1
PW,1.0D
C1209-1
B,0.5D
Lamp-Interior-Rear (B104)
PN,1.0D
C0357-3
C0357-1
PW,1.0D
C1991-1
B,0.5D
SJ13
B,2.0D
C0550-8
Header-Earth (K108)

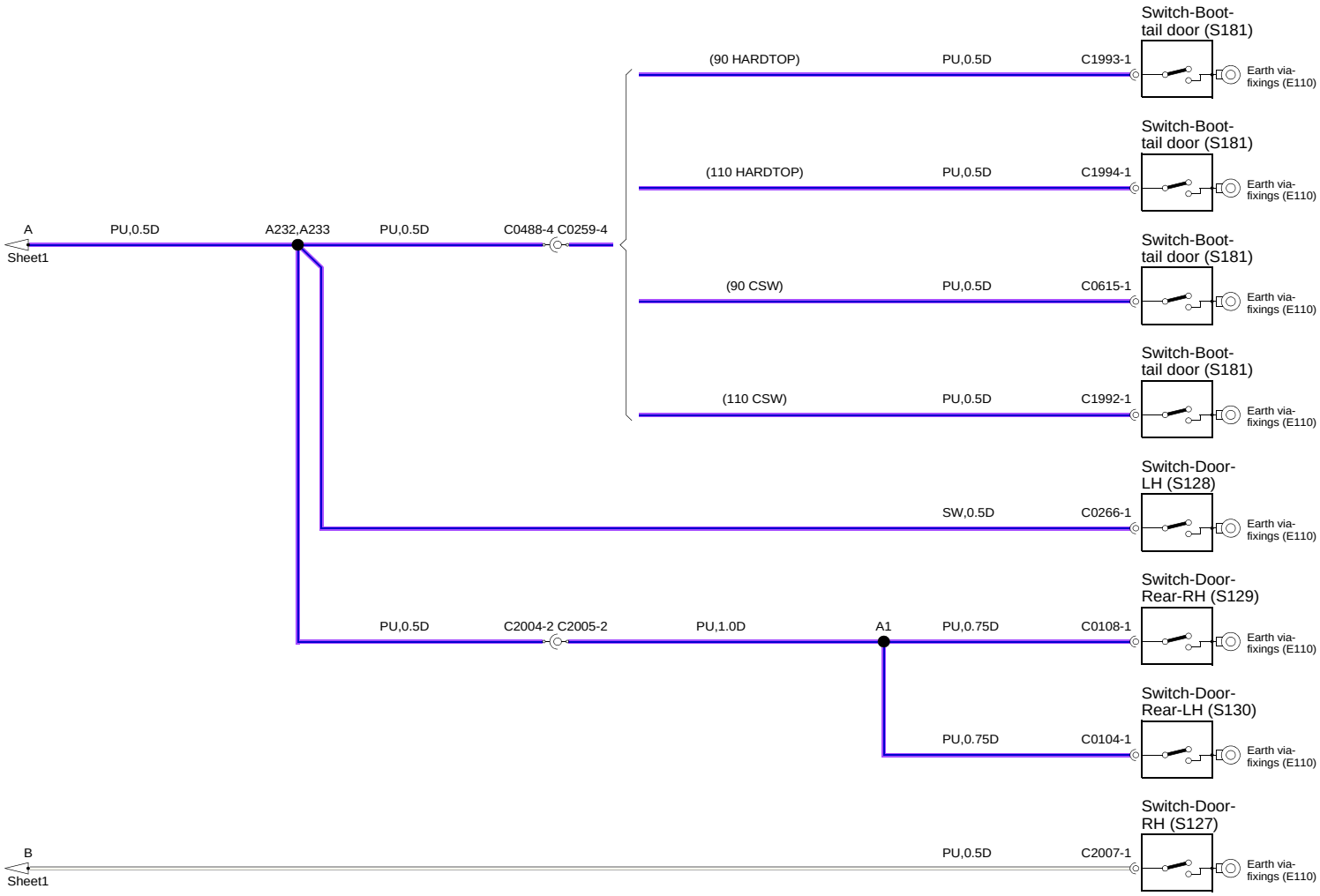
Switch-Boot-
tail door (S181)
(90 HARDTOP)
PU,0.5D
C1993-1
Earth via-
fixings (E110)
Switch-Boot-
tail door (S181)
(110 HARDTOP)
PU,0.5D
C1994-1
Earth via-
fixings (E110)
A
Sheet1
PU,0.5D
A232,A233
PU,0.5D
C0488-4 C0259-4
Switch-Boot-
tail door (S181)
(90 CSW)
PU,0.5D
C0615-1
Earth via-
fixings (E110)
Switch-Boot-
tail door (S181)
(110 CSW)
PU,0.5D
C1992-1
Earth via-
fixings (E110)
Switch-Door-
LH (S128)
SW,0.5D
C0266-1
Earth via-
fixings (E110)
Switch-Door-
Rear-RH (S129)
PU,0.5D
C2004-2 C2005-2
PU,1.0D
A1
PU,0.75D
C0108-1
Earth via-
fixings (E110)
Switch-Door-
Rear-LH (S130)
PU,0.75D
C0104-1
Earth via-
fixings (E110)
Switch-Door-
RH (S127)
B
Sheet1
PU,0.5D
C2007-1
Earth via-
fixings (E110)