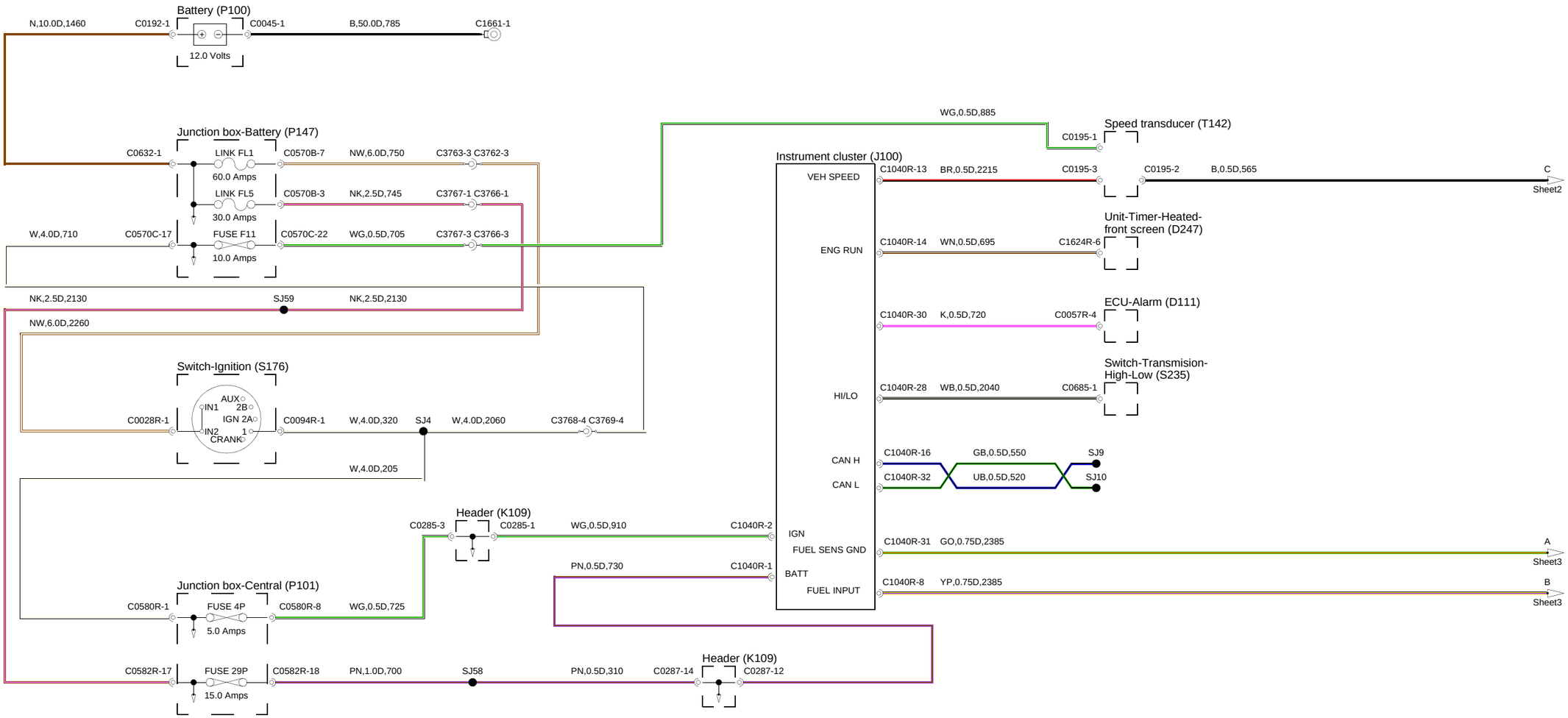
Battery (P100)
N,10.0D,1460
C0192-1
C0045-1
B,50.0D,785
C1661-1
12.0 Volts
Junction box-Battery (P147)
C0632-1
LINK FL1
60.0 Amps
C0570B-7
NW,6.0D,750
C3763-3 C3762-3
LINK FL5
30.0 Amps
C0570B-3
NK,2.5D,745
C3767-1 C3766-1
W,4.0D,710
C0570C-17
FUSE F11
10.0 Amps
C0570C-22
WG,0.5D,705
C3767-3 C3766-3
NK,2.5D,2130
SJ59
NK,2.5D,2130
NW,6.0D,2260
Switch-Ignition (S176)
AUX
IN1
2B
IGN 2A
IN2
1
CRANK
C0028R-1
C0094R-1
W,4.0D,320
SJ4
W,4.0D,2060
C3768-4 C3769-4
W,4.0D,205
Header (K109)
C0285-3
C0285-1
WG,0.5D,910
C1040R-2
PN,0.5D,730
C1040R-1
Junction box-Central (P101)
C0580R-1
FUSE 4P
5.0 Amps
C0580R-8
WG,0.5D,725
C0582R-17
FUSE 29P
15.0 Amps
C0582R-18
PN,1.0D,700
SJ58
PN,0.5D,310
C0287-14
Header (K109)
C0287-12
WG,0.5D,885
Speed transducer (T142)
C0195-1
Instrument cluster (J100)
VEH SPEED
C1040R-13
BR,0.5D,2215
C0195-3
C0195-2
B,0.5D,565
C
Sheet2
ENG RUN
C1040R-14
WN,0.5D,695
C1624R-6
Unit-Timer-Heated-
front screen (D247)
C1040R-30
K,0.5D,720
C0057R-4
ECU-Alarm (D111)
HI/LO
C1040R-28
WB,0.5D,2040
C0685-1
Switch-Transmision-
High-Low (S235)
CAN H
C1040R-16
GB,0.5D,550
SJ9
CAN L
C1040R-32
UB,0.5D,520
SJ10
IGN
FUEL SENS GND
C1040R-31
GO,0.75D,2385
A
Sheet3
BATT
FUEL INPUT
C1040R-8
YP,0.75D,2385
B
Sheet3

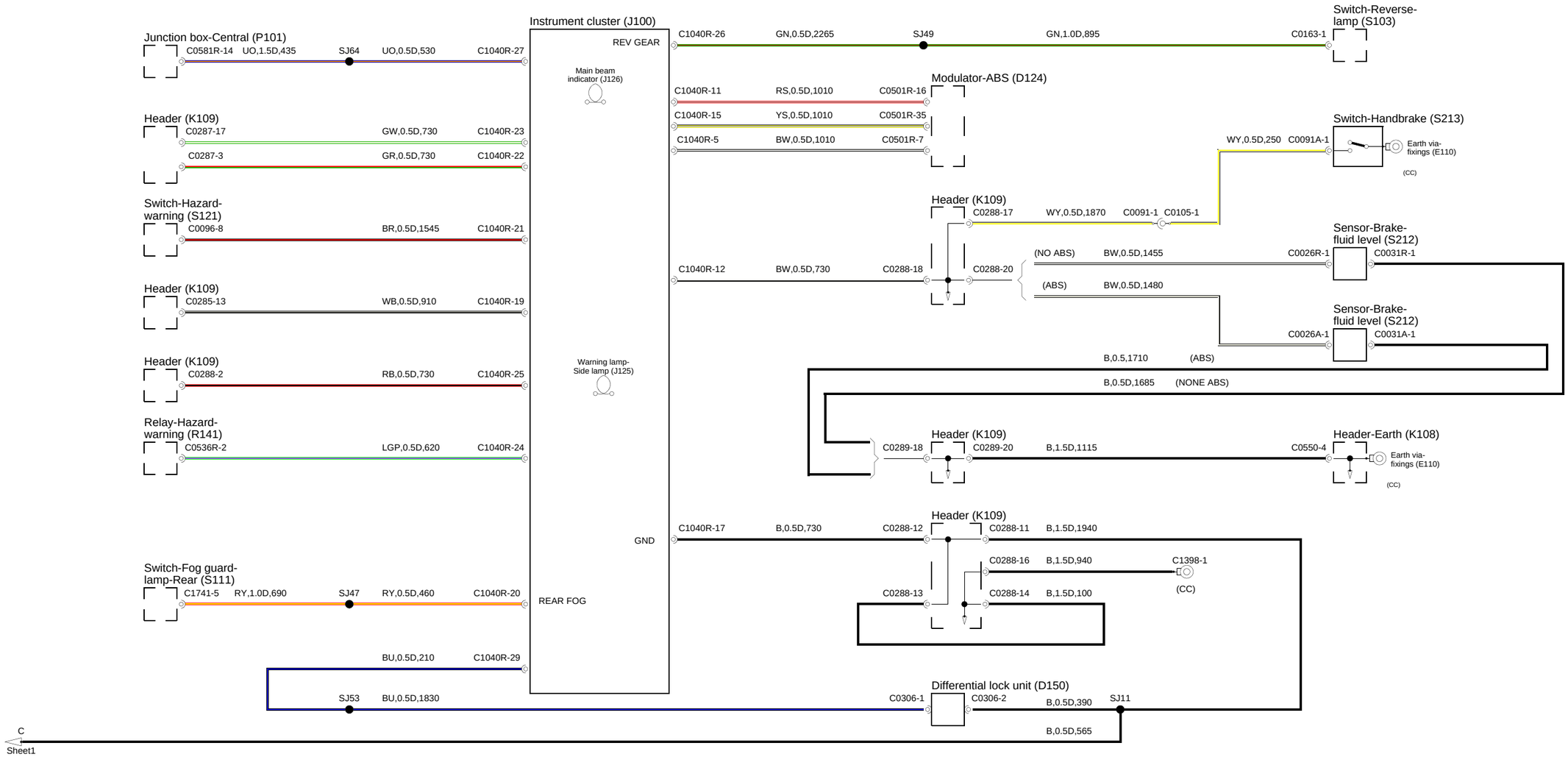
Junction box-Central (P101)
C0581R-14
UO,1.5D,435
SJ64
UO,0.5D,530
C1040R-27
Header (K109)
C0287-17
GW,0.5D,730
C1040R-23
C0287-3
GR,0.5D,730
C1040R-22
Switch-Hazard-warning (S121)
C0096-8
BR,0.5D,1545
C1040R-21
Header (K109)
C0285-13
WB,0.5D,910
C1040R-19
Header (K109)
C0288-2
RB,0.5D,730
C1040R-25
Relay-Hazard-warning (R141)
C0536R-2
LGP,0.5D,620
C1040R-24
Switch-Fog guard-lamp-Rear (S111)
C1741-5
RY,1.0D,690
SJ47
RY,0.5D,460
C1040R-20
BU,0.5D,210
C1040R-29
SJ53
BU,0.5D,1830
C
Sheet1
Instrument cluster (J100)
REV GEAR
Main beam indicator (J126)
Warning lamp-Side lamp (J125)
GND
REAR FOG
C1040R-26
GN,0.5D,2265
SJ49
GN,1.0D,895
C0163-1
Switch-Reverse-lamp (S103)
Modulator-ABS (D124)
C1040R-11
RS,0.5D,1010
C0501R-16
C1040R-15
YS,0.5D,1010
C0501R-35
C1040R-5
BW,0.5D,1010
C0501R-7
Switch-Handbrake (S213)
WY,0.5D,250
C0091A-1
Earth via-fixings (E110)
(CC)
Header (K109)
C0288-17
WY,0.5D,1870
C0091-1
C0105-1
Sensor-Brake-fluid level (S212)
C1040R-12
BW,0.5D,730
C0288-18
C0288-20
(NO ABS)
BW,0.5D,1455
C0026R-1
C0031R-1
(ABS)
BW,0.5D,1480
Sensor-Brake-fluid level (S212)
C0026A-1
C0031A-1
B,0.5,1710
(ABS)
B,0.5D,1685
(NONE ABS)
Header (K109)
C0289-18
C0289-20
B,1.5D,1115
C0550-4
Header-Earth (K108)
Earth via-fixings (E110)
(CC)
Header (K109)
C1040R-17
B,0.5D,730
C0288-12
C0288-11
B,1.5D,1940
C0288-16
B,1.5D,940
C1398-1
(CC)
C0288-13
C0288-14
B,1.5D,100
Differential lock unit (D150)
C0306-1
C0306-2
B,0.5D,390
SJ11
B,0.5D,565

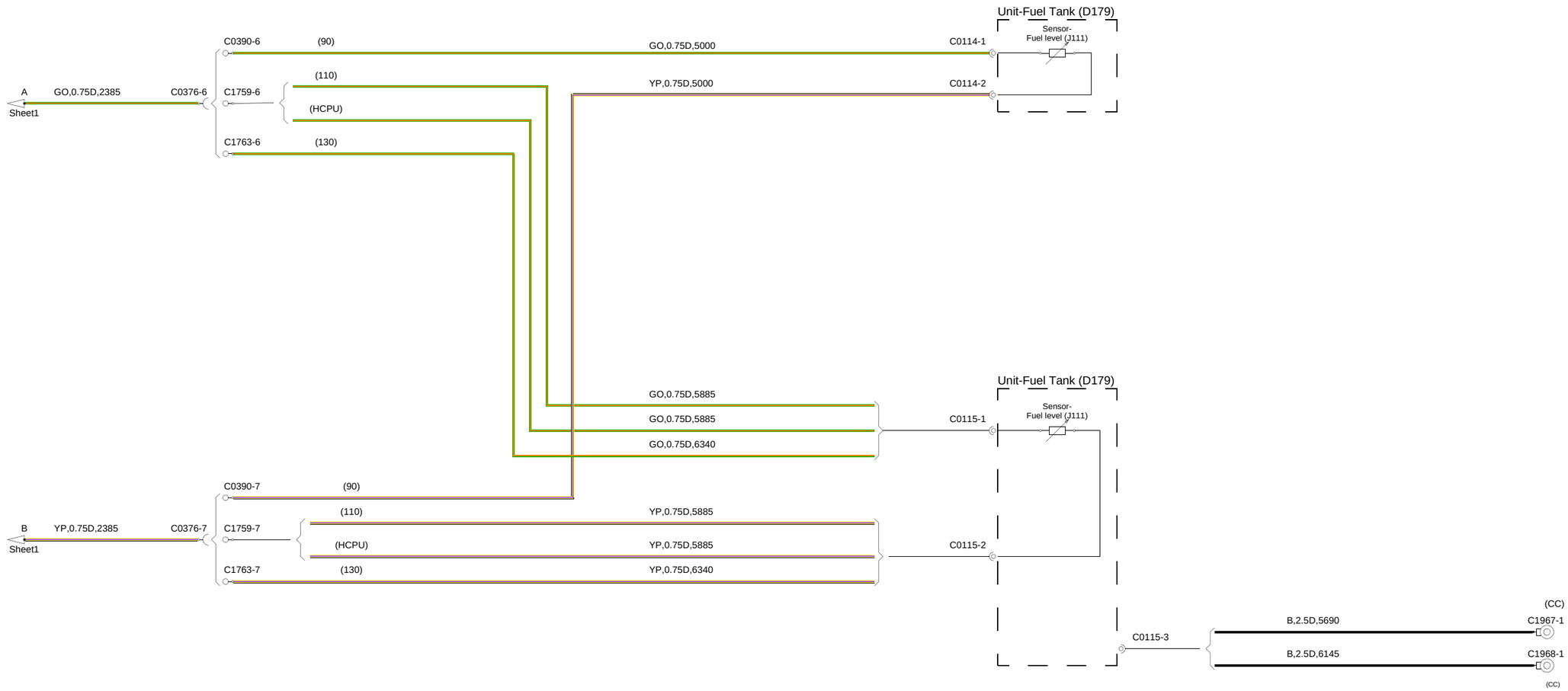
Unit-Fuel Tank (D179)
Sensor-
Fuel level (J111)
C0390-6
(90)
GO,0.75D,5000
C0114-1
A
GO,0.75D,2385
C0376-6
C1759-6
(110)
YP,0.75D,5000
C0114-2
Sheet1
(HCPU)
C1763-6
(130)
Unit-Fuel Tank (D179)
GO,0.75D,5885
Sensor-
Fuel level (J111)
GO,0.75D,5885
C0115-1
GO,0.75D,6340
C0390-7
(90)
(110)
YP,0.75D,5885
B
YP,0.75D,2385
C0376-7
C1759-7
(HCPU)
YP,0.75D,5885
C0115-2
Sheet1
C1763-7
(130)
YP,0.75D,6340
(CC)
B,2.5D,5690
C1967-1
C0115-3
B,2.5D,6145
C1968-1
(CC)