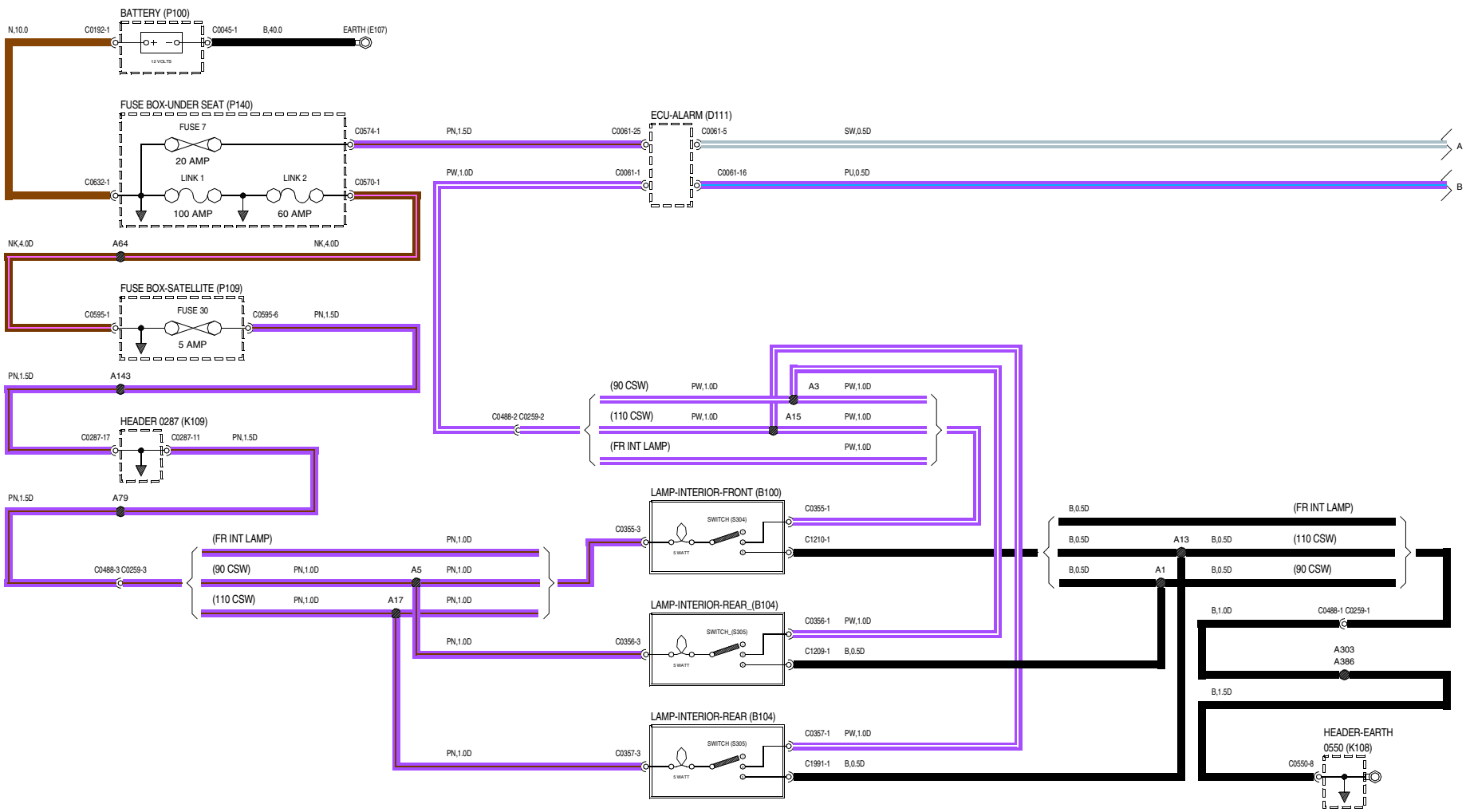

VWR000700-A-01

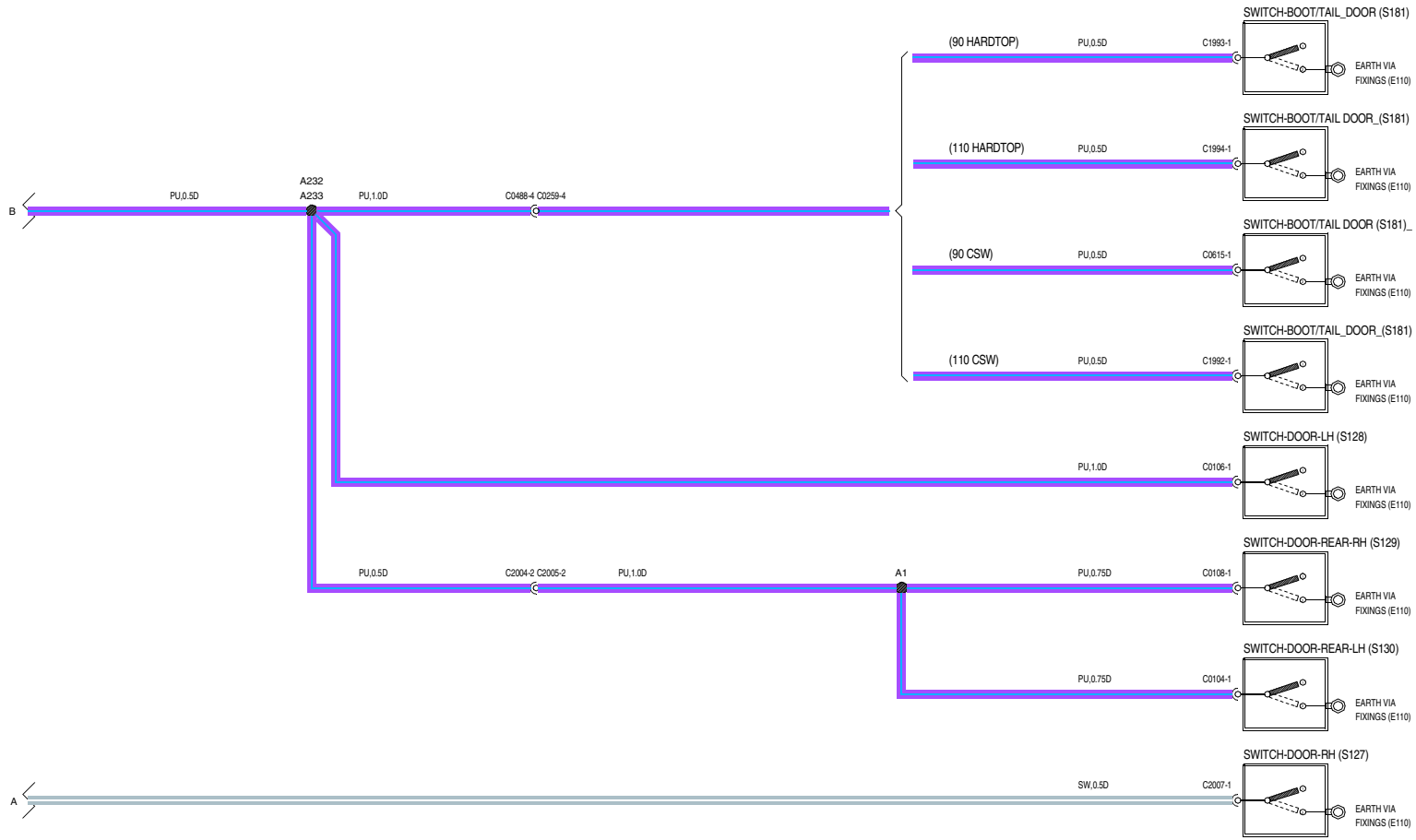
SWITCH-BOOT/TAIL_DOOR (S181)
(90 HARDTOP)
PU,0.5D
C1993-1
EARTH VIA FIXINGS (E110)
SWITCH-BOOT/TAIL DOOR_(S181)
(110 HARDTOP)
PU,0.5D
C1994-1
EARTH VIA FIXINGS (E110)
SWITCH-BOOT/TAIL DOOR (S181)_
(90 CSW)
PU,0.5D
C0615-1
EARTH VIA FIXINGS (E110)
SWITCH-BOOT/TAIL_DOOR_(S181)
(110 CSW)
PU,0.5D
C1992-1
EARTH VIA FIXINGS (E110)
SWITCH-DOOR-LH (S128)
PU,1.0D
C0106-1
EARTH VIA FIXINGS (E110)
SWITCH-DOOR-REAR-RH (S129)
PU,0.75D
C0108-1
EARTH VIA FIXINGS (E110)
SWITCH-DOOR-REAR-LH (S130)
PU,0.75D
C0104-1
EARTH VIA FIXINGS (E110)
SWITCH-DOOR-RH (S127)
SW,0.5D
C2007-1
EARTH VIA FIXINGS (E110)
B
PU,0.5D
A232
A233
PU,1.0D
C0488-4 C0259-4
PU,0.5D
C2004-2 C2005-2
PU,1.0D
A1
A
VWR000700-A-02