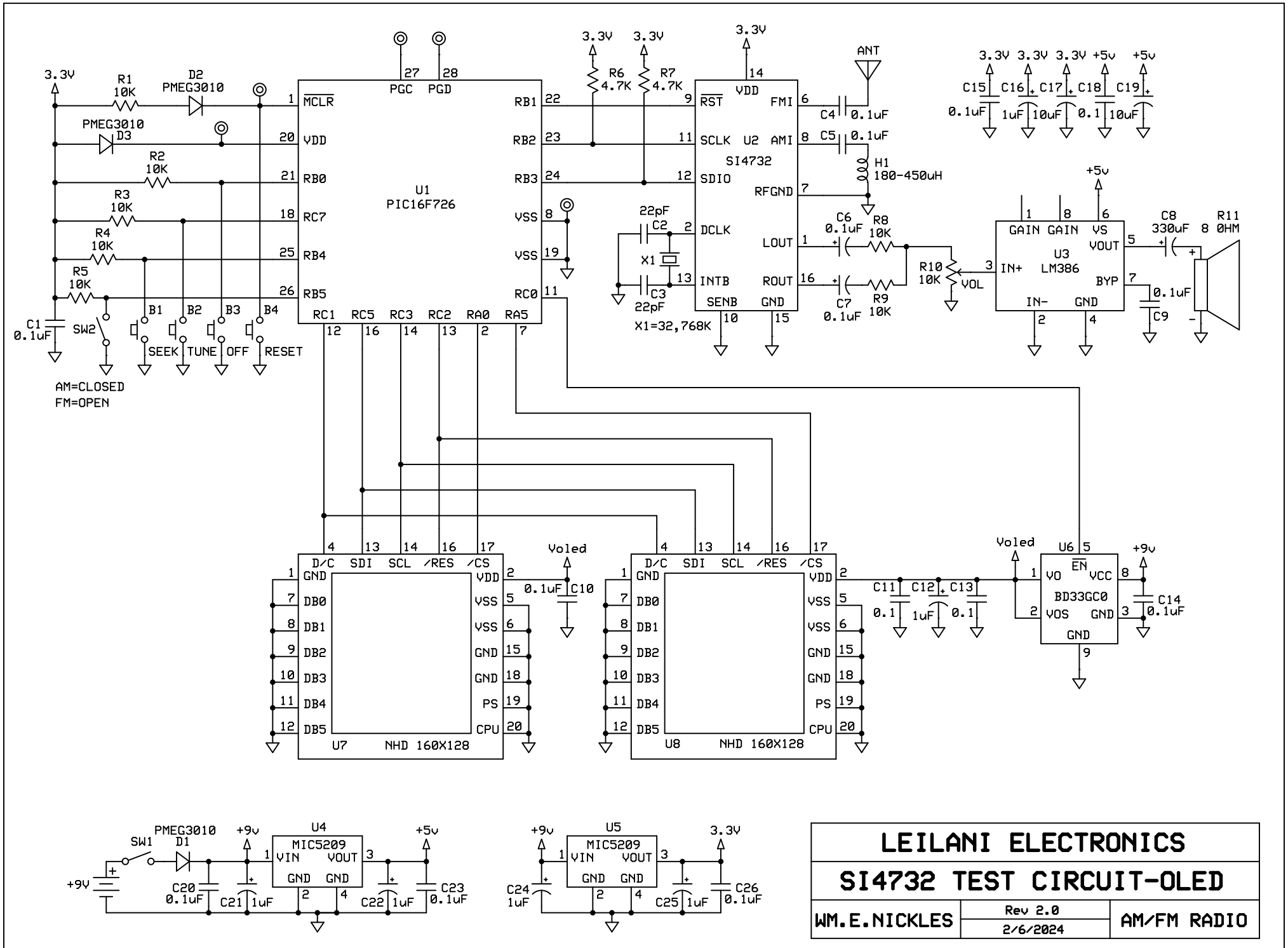
U1
PIC16F726
MCLR
VDD
RB0
RC7
RB4
RB5
RB1
RB2
RB3
VSS
RC0
RC1
RC5
RC3
RC2
RA0
RA5
PGC
PGD
U2
SI4732
RST
SCLK
SDIO
DCLK
INTB
SENB
VDD
FMI
AMI
RFGND
LOUT
ROUT
GND
ANT
H1
180-450uH
X1
22pF
X1=32,768K
U3
LM386
GAIN
IN+
IN-
VS
VOUT
BYP
R10
10K
VOL
R11
8 OHM
C8
330uF
U6
BD33GC0
VO
VOS
VCC
EN
U7
NHD 160X128
U8
NHD 160X128
D/C
SDI
SCL
/RES
/CS
DB0
DB1
DB2
DB3
DB4
DB5
PS
CPU
Voled
+9v
U4
MIC5209
VIN
VOUT
U5
MIC5209
PMEG3010
D1
D2
D3
SW1
SW2
+9V
AM=CLOSED
FM=OPEN
B1
B2
B3
B4
SEEK
TUNE
OFF
RESET
LEILANI ELECTRONICS
SI4732 TEST CIRCUIT-OLED
WM.E.NICKLES
Rev 2.0
2/6/2024
AM/FM RADIO