1. ALL WORK SHALL BE PERFORMED IN STRICT ACCORDANCE WITH THE INTERNATIONAL BUILDING CODE - IBC (2015 EDITION) AND ALL APPLICABLE LOCAL CODES, ORDINANCES AND REGULATIONS HAVING JURISDICTION, AS STATED IN THE CODE ANALYSIS.

2. DO NOT SCALE THE DRAWINGS. USE CALCULATED DIMENSIONS ONLY. SCALES INDICATED REFER TO SHEETS PRINTED AT 30"x42" SIZE AND ARE NOT APPLICABLE TO REDUCED DRAWINGS.

3. THE CONTRACTOR SHALL PROVIDE PROTECTION FOR THE GENERAL PUBLIC AND CONSTRUCTION WORKERS IN AND AROUND THE CONSTRUCTION AREA, AND FOR THE ADJACENT TENANTS AND PERSONS. THE CONTRACTOR SHALL PROVIDE ADEQUATE BARRIERS TO EXERCISE CONTROL OF SAFE INGRESS AND EGRESS OF THE PREMISES. FIRE EXITS SHALL BE MAINTAINED AT ALL TIMES, AND AT NO TIME BE BLOCKED. THE CONTRACTOR SHALL BARRICADE ALL UNSAFE OR INJURIOUS CONDITIONS.

4. ALL EXISTING FACILITIES, UTILITIES, AND EQUIPMENT SHALL BE PROTECTED BY THE CONTRACTOR DURING THE ENTIRE PERFORMANCE OF THE WORK. AREAS DISTURBED OR DAMAGED BY THE CONTRACTOR SHALL BE REPAIRED AND/OR REPLACED BY THE CONTRACTOR AT NO ADDITIONAL COST TO THE OWNER.

5. THE CONTRACTOR SHALL BE RESPONSIBLE FOR DAILY CLEAN UP OF CONSTRUCTION DEBRIS. ALL UNUSED MATERIAL AND DEBRIS SHALL BE LEGALLY DISPOSED OF, AWAY FROM THE PREMISES. NO ON-SITE STORAGE OR BURIAL OF DEBRIS SHALL BE ALLOWED.

6. THE CONTRACTOR SHALL CHECK AND VERIFY THE EXISTING CONDITIONS AT THE SITE AGAINST THE DRAWINGS AND SPECIFICATIONS, AND INFORM THE ARCHITECT IMMEDIATELY OF ANY DISCREPANCIES PRIOR TO COMMENCEMENT OF WORK.

7. WORK NOT INDICATED ON A PART OF THE DRAWINGS, BUT REASONABLY IMPLIED TO BE SIMILAR TO THAT SHOWN AT CORRESPONDING PLACES, SHALL BE PROVIDED BY THE CONTRACTOR AT NO ADDITIONAL COST TO THE OWNER.

8. MINOR DETAILS OR INCIDENTAL ITEMS NOT USUALLY SHOWN OR SPECIFIED, BUT NECESSARY FOR A PROPER AND COMPLETE INSTALLATION OF ANY PART OF THE WORK SHALL BE INCLUDED AS REQUIRED, AS IF THEY WERE INDICATED ON THE DRAWINGS.

9. THE TERM "PROVIDE" SHALL MEAN FURNISH AND INSTALL, AS IT IS USED THROUGHOUT THE NOTES ON THE DRAWINGS AND IN THE SPECIFICATIONS.

10. DETAILS AND SECTIONS ON THE DRAWINGS ARE SHOWN AT SPECIFIC LOCATIONS, AND ARE INTENDED TO SHOW GENERAL REQUIREMENTS THROUGHOUT. DETAILS NOTED AS "TYPICAL" IMPLY ALL CONDITIONS ARE TO BE TREATED SIMILARLY.

11. ALL FIRE-RATED CONSTRUCTION SHALL MEET THE FIRE-RESISTIVE RATINGS AND OTHER REQUIREMENTS OF LOCAL LAWS, ORDINANCES, REGULATIONS AND AUTHORITIES HAVING JURISDICTION.

12. ALL PENETRATIONS THROUGH FIRE-RATED CONSTRUCTION SHALL RECEIVE FIRE STOPPING, FIRE DAMPERS, FIRE SAFING, ETC. TO MAINTAIN THE FIRE-RATED CONSTRUCTION. SUCH PENETRATIONS SHALL INCLUDE, BUT NOT LIMITED TO, TELEPHONE, DATA, LIGHT FIXTURES, JUNCTION BOXES, DUPLEX RECEPTACLES, FIRE ALARM SYSTEMS, ROOM ACCESSORIES, ETC. THE RATING MUST CONTINUE AROUND AND BEHIND THE PENETRATION SO AS TO INSURE THE INTEGRITY OF RATED ASSEMBLY.

13. ALL ELECTRICAL OUTLETS, PLUMBING FIXTURES, MECHANICAL GRILLES, ETC. SHOWN ON THE ARCHITECTURAL DRAWINGS ARE INDICATED TO SET THE GENERAL LOCATION FOR EACH COMPONENT. THE CONTRACTOR SHALL REFER TO ALL DOCUMENTS, INCLUDING, BUT LIMITED TO, THE MECHANICAL, PLUMBING AND ELECTRICAL DRAWINGS FOR THE COMPLETE LAYOUT OF EACH RESPECTIVE ITEM.

14. ALL NEW PIPING AND ELECTRICAL CONDUITS SHALL BE CONCEALED WITHIN NEW CONSTRUCTION UNLESS OTHERWISE NOTED.

15. ALL OPENINGS IN MASONRY WALLS SHALL BE SUPPORTED BY GALVANIZED STEEL LINTELS UNLESS OTHERWISE NOTED. REFER TO STRUCTURAL DOCUMENTS FOR ADDITIONAL INFORMATION.

16. ALL EXPOSED WELDS TO BE GROUND AND MADE SMOOTH.

17. THROUGHOUT THE DURATION OF THE WORK, THE PLUMBING CONTRACTOR SHALL CAP EXISTING SANITARY LINES TO BE UTILIZED.

18. WHERE SURFACE DOOR CLOSERS ARE REQUIRED, THE CONTRACTOR SHALL ALLOW A MINIMUM OF SIX INCHES CLEAR TO ANY PARTITION ON THE HINGE SIDE OF THE DOOR, UNLESS OTHERWISE INDICATED.

19. THE CONTRACTOR SHALL BE RESPONSIBLE FOR RECORD KEEPING ALL EXPOSED CONDITIONS DISCOVERED DURING THE WORK AND ALL AS-BUILT CONDITIONS.

20. THE CONTRACTOR SHALL PROVIDE ALL NECESSARY SHORING AND BRACING TO SUPPORT CONSTRUCTION UNTIL PERMANENT SUPPORT IS ERECTED FOR THEIR WORK, THE CONTRACTOR SHALL TAKE ALL NECESSARY MEASURE TO PREVENT COLLAPSE OF WALLS, SLABS, ETC.

21. CONTRACTOR SHALL BE RESPONSIBLE FOR THE INTEGRITY OF THE STRUCTURE DURING THE CONSTRUCTION PERIOD AND SHALL TAKE ALL NECESSARY MEASURES TO PREVENT ANY DAMAGE TO THE STRUCTURE, ITS OCCUPANTS AND ITS CONTENTS.

22. ALL WOOD USED SHALL BE PRESSURE TREATED FIRE-RETARDANT LUMBER AND SHALL COMPLY WITH IBC SECTION 2303 (VCC IBC 2015 EDITION).

23. ALL LAMINATED SURFACES SHALL MEET STANDARDS CLASS I, 0-25 FLAME SPREAD AND SMOKE DEVELOPED (PER ASTM E84 AND UL 723 TUNNEL TEST METHOD).

24. MORTAR MIX SHALL CONFORM TO THE REQUIREMENTS OF THE IBC (2015 EDITION), SECTION 2105.2, TYPE S AND SHALL CONFORM TO ASTM C270,84.

25. 2103.3 GROUT SHALL COMPLY WITH ARTICLE 2.2 OF TMS 602/ACI 530.1/ASCE 6

26. LAY-IN ACOUSTICAL TILES SHALL MEET FLAME SPREAD 0-25 (ASTM E84) CLASS 'A' (FED. SPEC. SS-S118B) 25 OR UNDER (UL LABEL). PAINT SHALL MEET CLASS 'A' FIRE RATING OVER NON-COMBUSTIBLE SURFACES.

27. THE CONTRACTOR SHALL FIELD CHECK ALL DIMENSIONS AND FIXTURES, SHALL NOT DEVIATE FROM THESE DESIGNS, AND SHALL DETERMINE ACTUAL CONSTRUCTION DETAILS AND FABRICATE IN ACCORDANCE WITH ACCEPTED GOOD PRACTICE AND PROCEDURES. ANY DEVIATION FROM THESE DESIGNS SHALL BE REPORTED TO THE ARCHITECT.

28. THE CONTRACTOR SHALL PROVIDE SEALANT JOINTS BETWEEN ALL DISSIMILAR BUILDING MATERIALS, UNLESS OTHERWISE NOTED. REFER TO SPECIFICATIONS FOR SCHEDULE OF SEALANTS.

GENERAL NOTES | SCALE - | 6

1. THE CONTRACTOR SHALL NOTIFY THE ARCHITECT OF ANY DISCREPANCIES, BETWEEN EXISTING CONDITIONS AND THE CONSTRUCTION DOCUMENTS, PRIOR TO COMPLETING ANY DEMOLITION OR CONSTRUCTION WORK.
2. PERFORM DEMOLITION AS NOT TO COMPROMISE OR ALTER THE STRUCTURAL CAPABILITIES OF THE EXISTING BUILDING OR STRUCTURE. WHERE STRUCTURAL OR LOAD BEARING ITEMS ARE SCHEDULED FOR REMOVAL, COORDINATE DEMOLITION WITH THE STRUCTURAL ENGINEER.
3. SHORING, BRACING, AND GUYING: THE CONTRACTOR SHALL BE RESPONSIBLE FOR THE STABILITY AND THE SAFETY OF THE STRUCTURE DURING THE DEMOLITION AND CONSTRUCTION. THIS RESPONSIBILITY INCLUDES ANY AND ALL ENGINEERING FOR SHORING, METHODS AND SEQUENCES OF ERECTION, AND TEMPORARY STORAGE OF MATERIALS RESTING ON NEW CONSTRUCTION.
4. SITE ACCESS AND TEMPORARY CONTROLS: CONDUCT DEMOLITION AND DEBRIS-REMOVAL OPERATIONS TO ENSURE MINIMUM INTERFERENCE WITH ROADS, STREETS, WALKS, WALKWAYS, AND OTHER OCCUPIED AND USED FACILITIES.
5. PROVIDE TEMPORARY ENCLOSURES FOR PROTECTION OF THE EXISTING BUILDING AND ITS CONTENTS, WHILE CONSTRUCTION IS IN PROGRESS AND WHEN PORTIONS ARE COMPLETED, FROM EXPOSURE, FOUL WEATHER, OTHER RELATED CONSTRUCTION OPERATIONS AND SIMILAR ACTIVITIES.
6. DEMOLISH AND REMOVE EXISTING CONSTRUCTION ONLY TO THE EXTENT AS INDICATED ON THESE DOCUMENTS. USE APPROVED METHODS OF DEMOLITION REQUIRED TO COMPLETE THE WORK WITHIN THE LIMITATIONS OF GOVERNING REGULATIONS.
7. DO NOT CUT AND PATCH STRUCTURAL ELEMENTS IN A MANNER THAT COULD CHANGE THEIR LOAD-BEARING CAPACITY OR LOAD DEFLECTION RATIO.
8. WHERE WALLS OR PARTITIONS THAT ARE DEMOLISHED EXTEND ONE FINISHED AREA INTO ANOTHER, PATCH AND REPAIR FLOOR AND WALL SURFACES IN THE NEW SPACE UNLESS OTHERWISE NOTED. PROVIDE AN EVEN SURFACE OF UNIFORM FINISH, COLOR, TEXTURE, AND APPEARANCE. REMOVE EXISTING FLOOR AND WALL COVERINGS AND REPLACE WITH NEW MATERIALS, IF NECESSARY, TO ACHIEVE UNIFORM COLOR AND APPEARANCE.
9. CONTRACTOR IS RESPONSIBLE FOR MINOR DEMOLITION TO EXISTING WALLS & CEILINGS REQUIRED IN AREAS OF NEW STRUCTURAL, MECHANICAL, ELECTRICAL, PLUMBING, OR TEL./COM. WORK AS REQUIRED TO FACILITATE THE SCOPE OF WORK AS DESCRIBED HEREIN.
10. CONTRACTOR SHALL PROVIDE PATCHING AND/OR REPAIR OF EXISTING WALLS & CEILINGS REQUIRED IN AREAS OF NEW STRUCTURAL, MECHANICAL, ELECTRICAL, PLUMBING, OR TEL./COM. WORK.
11. PATCH AND REPAIR WORK, SHALL MEET OR EXCEED EXISTING FIRE ASSEMBLY RATINGS OF EXISTING WALLS, FLOOR SLABS, OR CEILINGS WHERE APPLICABLE.
12. CONTRACTOR SHALL MAKE ARRANGEMENTS WITH OWNER FOR THE STORAGE AND/OR DISPOSITION OF ANY MATERIALS OR EQUIPMENT, FIXTURES, ETC. TO BE SALVAGED. PRIOR TO COMMENCEMENT CONTRACTOR SHALL NOTIFY OWNER OF DEMOLITION AND CONSTRUCTION WORK AS TO AVOID CONFLICTS W/ OWNER ACTIVITIES
13. EXTENT OF DEMOLITION MAY BE MODIFIED DUE TO UNFORESEEN CONDITIONS IN THE FIELD.
14. REFER TO MEP DRAWINGS FOR DETAILS ON ASSOCIATED ITEMS, INCLUDING BUT NOT LIMITED TO, MECHANICAL UNITS IN CEILING, DUCTWORK, RELOCATING ELECTRICAL PANELS, ALL ELECTRICAL ITEMS, PLUMBING DEMO, & FIRE PROTECTION REQUIREMENTS DURING DEMOLITION. PATCH AND REPAIR ADJACENT FLOOR, WALL AND CEILING SURFACES AS REQ'D.
15. UTILITY SERVICE: MAINTAIN EXISTING UTILITIES INDICATED TO REMAIN IN SERVICE AND PROTECT THEM AGAINST DAMAGE DURING SELECTIVE DEMOLITION OPERATIONS.
16. EXCEPT FOR ITEMS OR MATERIALS INDICATED TO BE REUSED, SALVAGED, REINSTALLED, OR OTHERWISE INDICATED TO REMAIN OWNER'S PROPERTY, DEMOLISHED MATERIALS SHALL BECOME CONTRACTOR'S PROPERTY AND SHALL BE REMOVED FROM THE PROJECT SITE.
17. NO MASONRY STRUCTURE SHALL BE REMOVED WITHOUT INSPECTION BY THE STRUCTURAL ENGINEER FOR TEMPORARY SHORING.
18. ALL DOORS, FRAMES AND HARDWARE SCHEDULED FOR DEMO SHALL BE SALVAGED AND TURNED OVER TO THE OWNER. NO DOORS, FRAMES & HARDWARE SHALL BE DISCARDED PRIOR TO APPROVAL BY ARCHITECT OR OWNER.
19. EXISTING DUCTWORK & PIPING SHALL BE SEALED OFF PRIOR TO DEMOLITION WORK

GENERAL DEMOLITION NOTES | SCALE - | 4

ATLANTIC CITY VOTING MACHINE WAREHOUSE

235 DOLPHIN AVENUE
NORTHFIELD, NJ
08225

SOSH
sosh architects | atlantic city, nj

CLOSET XXX — AREA IDENTIFICATION TAG
XXX — WALL PARTITION TAG
0'-0" — REFERENCE MARKER/ WORKING POINT
FIN. FL. 0'-0" — ELEVATION MARKER
1 — COLUMN LINE DESIGNATION AND GRID
X XXX — SECTION REFERENCE
XX XXX — ELEVATION REFERENCE
XX — ELEVATION REFERENCE (SAME SHEET)
X X AX.XX X X — INTERIOR ELEVATION REFERENCE
XXX — DOOR NUMBER TAG
XX — WINDOW / LOUVER NUMBER TAG
— REVISION TAG
NEW PARTITION, SEE PARTITION TYPE

STANDARD ARCHITECTURAL SYMBOLS | SCALE N.T.S. | 7

DWG. NO.	DRAWING TITLE	CONSTRUCTION DOCS 05/20/2022	ISSUE:
	ARCHITECTURAL		
A-000	COVER SHEET, EXTERIOR RENDERING, LOCATION PLANS, PROJECT SUMMARY & TEAM, DWG INDEX	■	
AD-100	DEMOLITION PLAN	■	
AD-200	DEMOLITION REFLECTED CEILING PLAN	■	
A-100	CONSTRUCTION PLAN	■	
A-200	REFLECTED CEILING PLAN	■	
A-400	INTERIOR ELEVATIONS AND DETAILS	■	
A-900	DOOR SCHEDULE, PARTITION TYPES & WINDOW TYPES	■	
	MECHANICAL		
M-000	MECHANICAL COVER SHEET	■	
M-100	MECHANICAL DEMOLITION FLOOR PLAN	■	
M-200	MECHANICAL NEW WORK FLOOR PLAN	■	
M-300	MECHANICAL SCHEDULES NOTES & DETAILS	■	
MP-100	MECHANICAL & PLUMBING GAS DEMO & NEW WORK PLAN	■	
	ELECTRICAL		
E-000	ELECTRICAL NOTES, LEGEND, SYMBOLS & SCHEDULES	■	
ED-100	ELECTRICAL POWER DEMOLITION PLAN	■	
ED-200	ELECTRICAL LIGHTING DEMOLITION PLAN	■	
E-100	ELECTRICAL POWER NEW WORK PLAN	■	
E-200	ELECTRICAL LIGHTING NEW WORK PLAN	■	

DRAWING INDEX | SCALE N.T.S | 5

PROJECT SUMMARY

THE WORK OF THIS PROJECT, AS DEFINED BY THE UNIFORM CONSTRUCTION CODE OF THE STATE OF NEW JERSEY, QUALIFIES AS AN ALTERATION AS IDENTIFIED ON THE CONSTRUCTION DOCUMENTS.

PROJECT INCLUDES NEW PARTITIONS AND ASSOCIATED DOORS, CEILINGS, LIGHTING, FINISHES AS INDICATED ON THESE DRAWINGS

ALL WORK IS TO COMPLY WITH ALL LOCAL CODES HAVING JURISDICTION INCLUDING THE FOLLOWING :

APPLICABLE CODES
BUILDING SUBCODE (NJAC 5:23-3.14)
INTERNATIONAL BUILDING CODE/2015, NJ ED (IBC W/NJ EDITS FROM 3.14)
INTERNATIONAL FIRE CODE/2015
ICC/ANSI A117.1-2009
PLUMBING SUBCODE (NJAC 5:23-3.15)
NATIONAL STANDARD PLUMBING CODE/2015
ELECTRICAL SUBCODE (NJAC 5:23-3.16)
NATIONAL ELECTRICAL CODE (NFPA 70)/2014
ENERGY SUBCODE (NJAC 5:23-3.18)
ASHRAE 90.1-2013 (COMMERCIAL)
MECHANICAL SUBCODE (NJAC 5:23-3.20)
INTERNATIONAL MECHANICAL CODE/2015
FUEL GAS SUBCODE (NJAC 5:23-3.22)
INTERNATIONAL FUEL GAS CODE/2015
REHABILITATION SUBCODE (NJAC 5:23-6)
BARRIER FREE SUBCODE (CHAPTER 11 OF IBC/2015 & NJAC 5:23-7)
ICC/ANSI A117.1-2009
ELEVATOR SUBCODE (NJAC 5:23-12)
AMERICAN SOCIETY OF MECHANICAL ENGINEERS (ASME)

PROJECT DATA

USE GROUP - S2 STORAGE WITH ACCESSORY BUSINESS - (NO CHANGE)
CONSTRUCTION TYPE - 2-B
GROSS PROJECT AREA - +-2000 SQ FT

NO CHANGE TO USE OR OCCUPANCY

ALL TRIM AND FINISH MATERIALS SHALL COMPLY WITH FLAME SPREAD AND SMOKE-DEVELOPED PROPERTIES WHEN TESTED IN ACCORDANCE WITH ASTM-E84, AS DEFINED BY IBC SECTION 803 AND TABLE 803.5; DEFINED BY THE FOLLOWING VALUES:

AREA	CLASS	FLAME SPREAD
ROOMS & ENCLOSED SPACES	C	76-200
EXITS	B	26-75
CORRIDORS	B	26-75

INTERIOR WALL AND CEILING FINISHES SHALL HAVE A MAXIMUM SMOKE-DEVELOPED RATING OF 0-450 WHEN TESTED IN ACCORDANCE WITH ASTM E-84.

ALL WOOD USED SHALL BE PRESSURE TREATED FIRE-RETARDANT LUMBER AND SHALL COMPLY WITH IBC SECTION 2303 (2009 EDITION).

ALL LAMINATED SURFACES SHALL MEET STANDARD CLASS A, 0-25 FLAME SPREAD AND SMOKE DEVELOPED (PER ASTM E84 AND UL 723 TUNNEL TEST METHOD).

ALL REQUIRED FIRE TREATED MATERIALS SHALL CONFORM TO IBC 2303, LABELING OF MATERIAL.

PROJECT SUMMARY | SCALE - | 3

Owner
Atlantic County
Office of the Superintendent of Elections
5920 Main Street
Mays Landing, NJ 08330

Architect of Record
SOSH Architects
1020 Atlantic Avenue
Atlantic City, NJ 08401
T: (609) 345-5222
F: (609) 345-7486
www.sosharch.com

MEP Engineering
Concord Engineering
520 South Burnt Mill Road
Voorhees, NJ 08043
T: (856) 427-0200

PROJECT TEAM | SCALE NTS | 2

PROJECT LOCATION
ATLANTIC COUNTY VOTING MACHINE WAREHOUSE

235 DOLPHIN AVENUE
NORTHFIELD, NJ 08225

FIRST FLOOR LEVEL - INTERIOR

N T.N.

LOCATION MAP | SCALE NTS | 1

ATLANTIC COUNTY VOTING MACHINE WAREHOUSE ALTERATION

235 DOLPHIN AVENUE
NORTHFIELD, NJ 08225

SUBMISSIONS

NO.	DATE:	DESCRIPTION:
	05/20/2022	CONSTRUCTION DOCUMENTS

DRAWING TITLE:
COVER SHEET

DRAWN BY: CRB
REVIEWED BY: KVVD
PROJECT NO. 22013.00.001
DRAWING NO. AC-000

DEMOLITION LEGEND

- EXISTING WALL TO REMAIN
- EXISTING DOOR TO REMAIN
- EXISTING PARTITION TO BE REMOVED
- EXISTING DOOR TO BE REMOVED

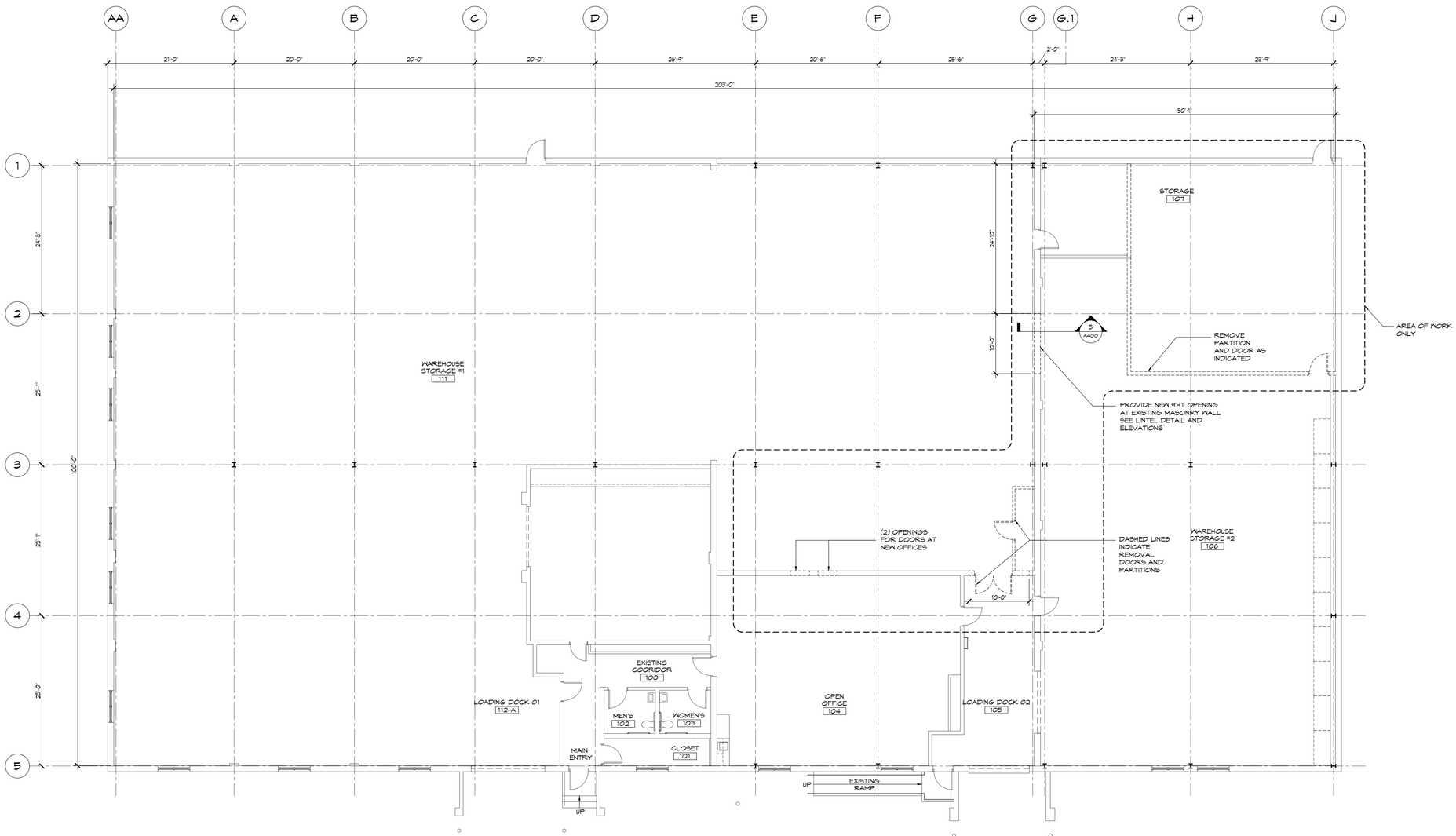

DEMOLITION PLAN - FIRST FLOOR | SCALE 1/8"=1'-0" | 1

SOSH
sosh architects | atlantic city, nj

ATLANTIC COUNTY VOTING MACHINE WAREHOUSE ALTERATION

235 DOLPHIN AVENUE
NORTHFIELD, NJ 08225

SUBMISSIONS

NO.	DATE:	DESCRIPTION:
	05/20/2022	CONSTRUCTION DOCUMENTS

DRAWING TITLE:
FIRST FLOOR DEMOLITION PLAN

DRAWN BY:
REVIEWED BY:
PROJECT NO. 22013.00.001
DRAWING NO. AD-100

DEMOLITION LEGEND	
———	EXISTING ITEM TO REMAIN
- - - -	EXISTING ITEM TO BE REMOVED

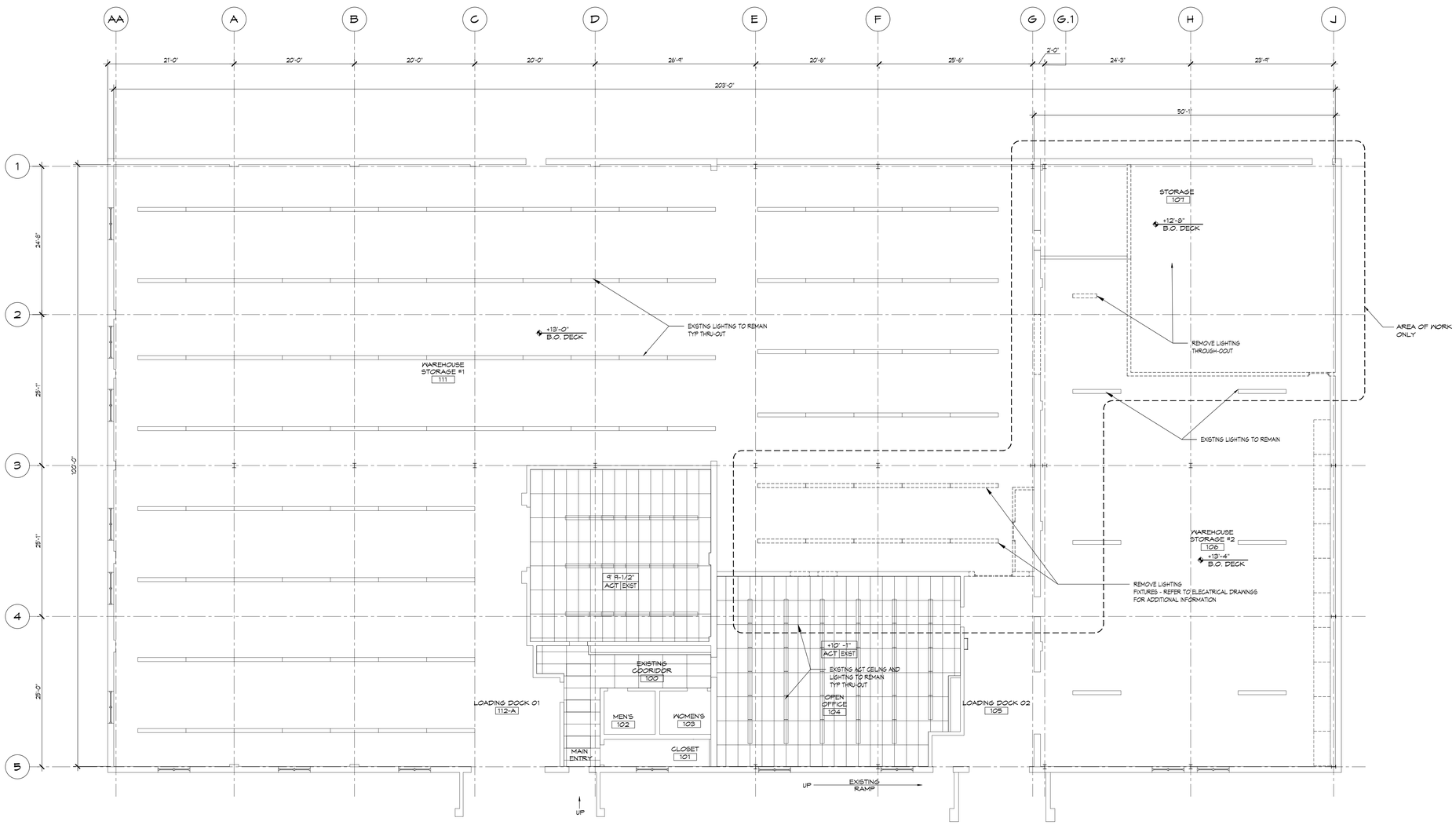

SOSH

sosh architects | atlantic city, nj

ATLANTIC COUNTY VOTING
MACHINE WAREHOUSE
ALTERATION

235 DOLPHIN AVENUE
NORTHFIELD, NJ 08225

SUBMISSIONS

NO.	DATE:	DESCRIPTION:
	05/20/2022	CONSTRUCTION DOCUMENTS

DRAWING TITLE:

DEMOLITION REFLECTED
CEILING PLAN

DRAWN BY: CRB
REVIEWED BY: VDG,KV
PROJECT NO. 22013.00.001
DRAWING NO. AD-200

DEMOLITION REFLECTIVE CEILING PLAN | SCALE 1/8"=1'-0" | 1

CONSTRUCTION LEGEND

- EXISTING ITEM TO REMAIN
- NEW PARTITION - REFER TO PARTITION TYPES ON A900 FOR MORE INFORMATION
- NEW DOOR - REFER TO DOOR SCHEDULE ON A900 FOR MORE INFORMATION
- NEW WINDOW - REFER TO WINDOW TYPES ON A900 FOR MORE INFORMATION

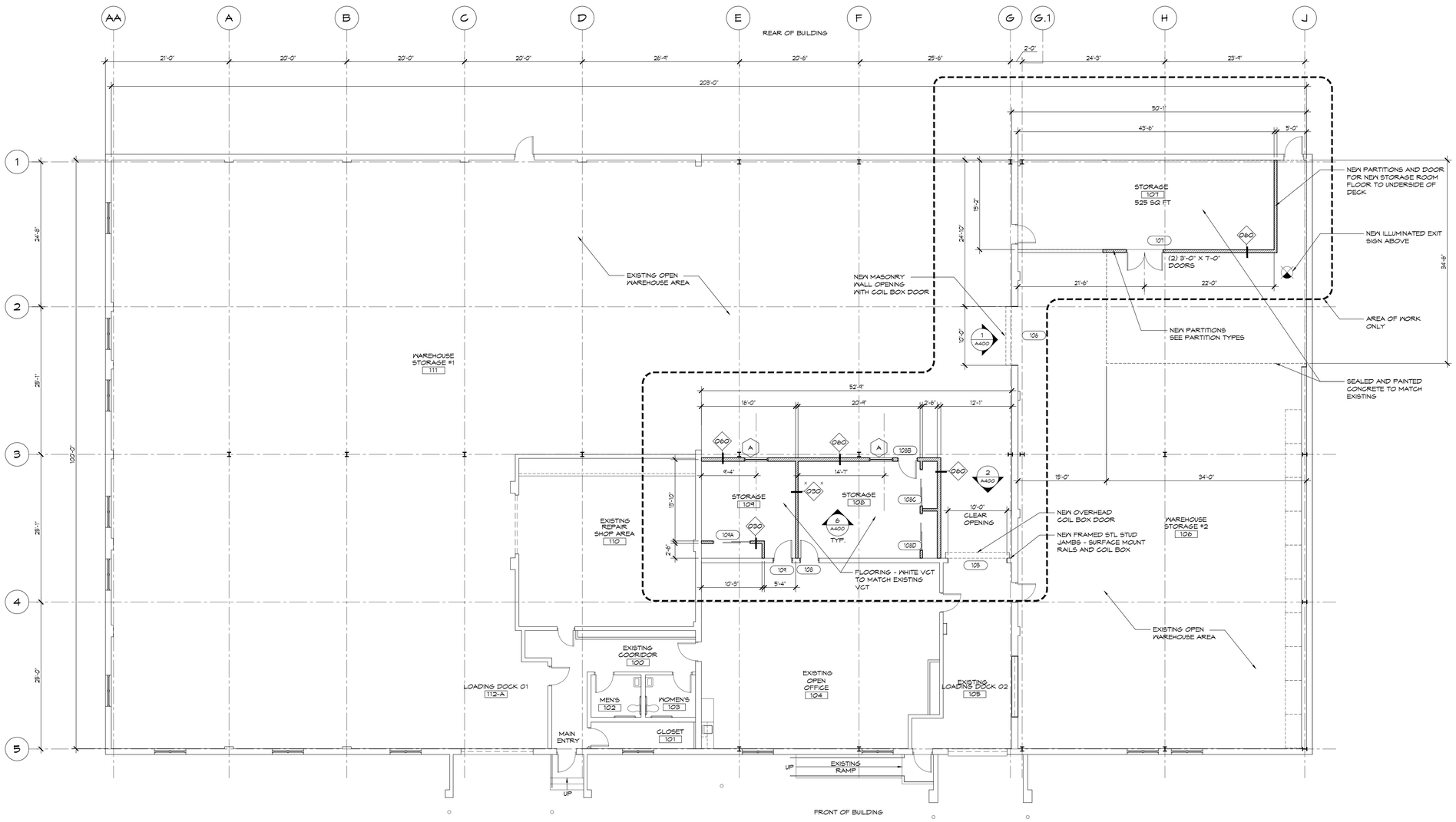

SOSH
sosh architects | atlantic city, nj

ATLANTIC COUNTY VOTING MACHINE WAREHOUSE ALTERATION

235 DOLPHIN AVENUE
NORTHFIELD, NJ 08225

SUBMISSIONS

NO.	DATE:	DESCRIPTION:
	05/20/2022	CONSTRUCTION DOCUMENTS

DRAWING TITLE:
FIRST FLOOR PLAN

DRAWN BY: VDG
REVIEWED BY: KC
PROJECT NO. 22013.00.001
DRAWING NO. A-100

FIRST FLOOR PLAN | SCALE 1/8" = 1'-0" | 1

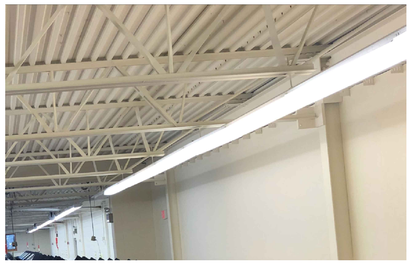

TYP LIGHTING FIXTURE AT WAREHOUSE | SCALE - | 3

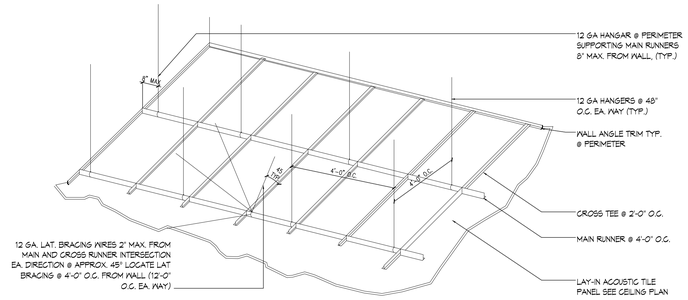

TYP A.C.T. CEILING DETAIL | SCALE - | 2

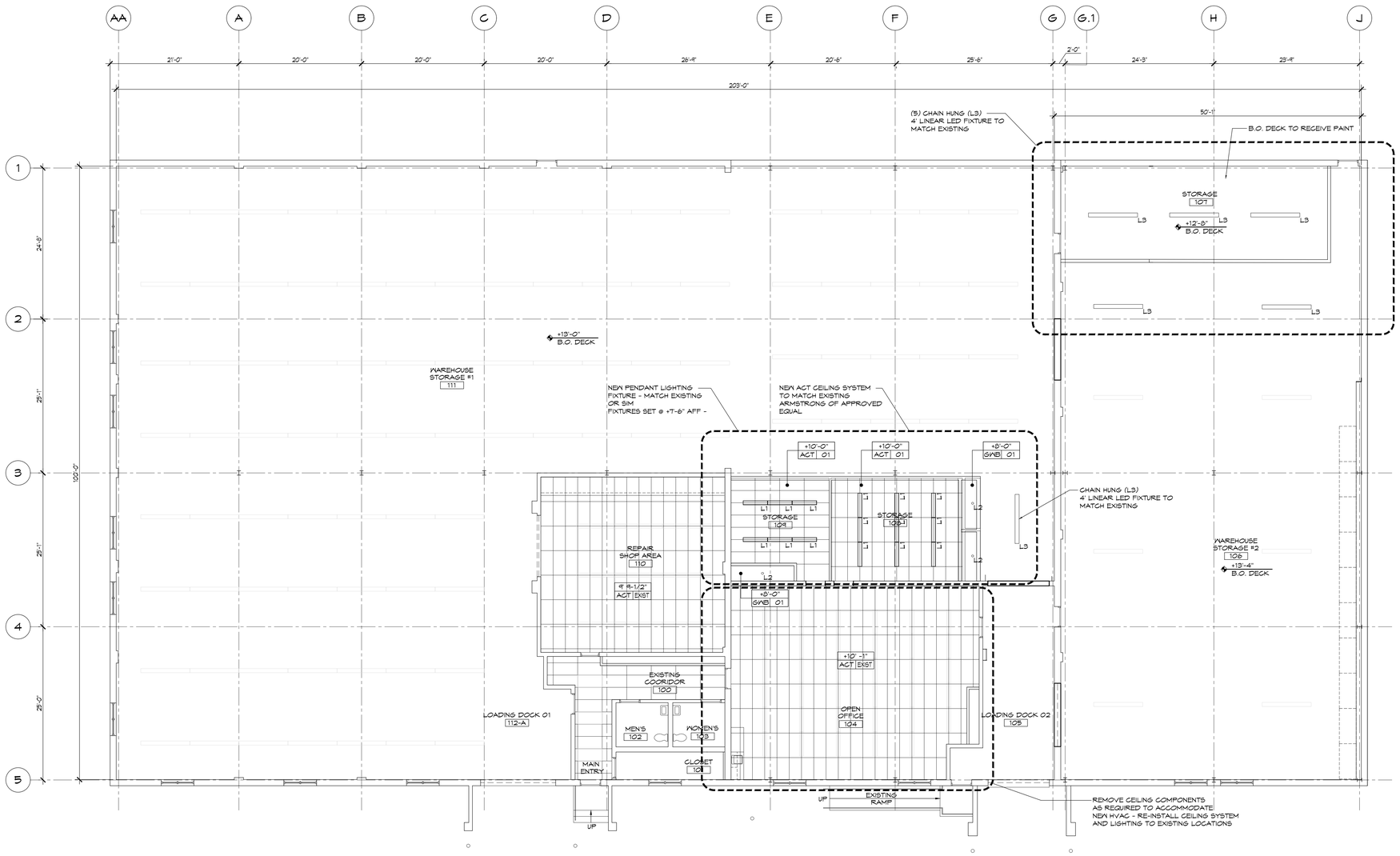

FIRST FLOOR REFLECTIVE CEILING PLAN | SCALE 1/8" = 1'-0" | 1

SOSH
sosh architects | atlantic city, nj

ATLANTIC COUNTY VOTING MACHINE WAREHOUSE ALTERATION

235 DOLPHIN AVENUE
NORTHFIELD, NJ 08225

SUBMISSIONS

NO.	DATE:	DESCRIPTION:
	05/20/2022	CONSTRUCTION DOCUMENTS

DRAWING TITLE:
FIRST FLOOR REFLECTED CEILING PLAN

DRAWN BY: CRB
REVIEWED BY: KV, VD
PROJECT NO. 22013.00.001
DRAWING NO. A-200

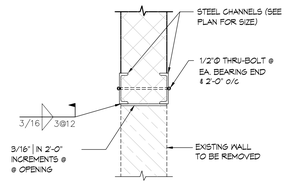

ERECTION SEQUENCE:

1) SAWCUT 4" SLOT ON ONE SIDE.
2) INSTALL CHANNEL ON ONE SIDE.
3) REPEAT STEPS 1 & 2 ON OTHER SIDE.
4) INSTALL 1/2" Ø THRU-BOLTS.
5) INSTALL & WELD 3/16" PLATE TO UNDERSIDE OF CHANNEL IN 2'-0" INCREMENTS AS WALL IS REMOVED.

INSTALLATION OF CHANNEL LINTEL | SCALE 3/4" = 1'-0" | 5

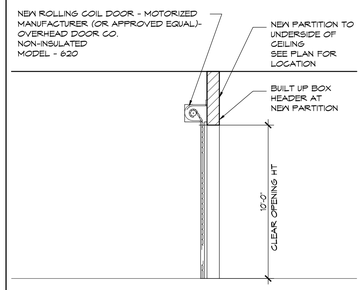

SECTION THRU COIL DOOR | SCALE 1/4" = 1'-0" | 4

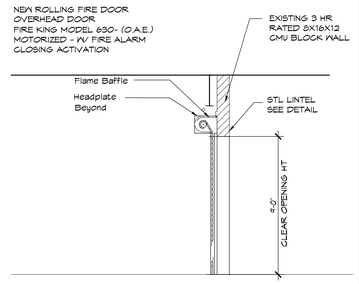

SECTION THRU COIL DOOR | SCALE 1/4" = 1'-0" | 3

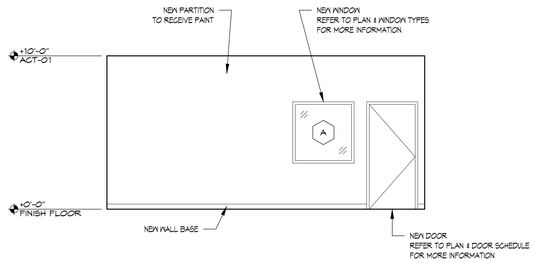

INTERIOR ELEVATION - TYPICAL | SCALE 1/4" = 1'-0" | 6

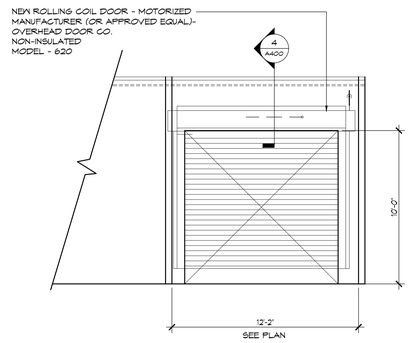

VERIFY ALL DIMENSIONS AND CONFIGURATIONS ARE COORDINATED WITH ALL OVERHEAD DOOR EQUIPMENT INCLUDING MOTORS, ALARMS, FUSIBLE LINKS SYSTEMS ETC - COIL BOX TO BE MOUNTED TO STRUCTURE

INTERIOR ELEVATION - NEW DOOR OPENING | SCALE 1/4" = 1'-0" | 2

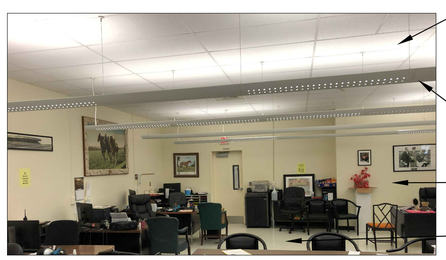

MATCH EXISTING 2X4 ACT CEILING SYSTEM - ARMSTRONG OR APPROVED EQUAL

NEW LIGHTING FIXTURES TO MATCH EXISTING - PENDANT FIXTURE UPLIGHTING

MATCH EXISTING PAINT COLOR PT-01 FOR WALLS

MATCH EXISTING VCT FOR FLOOR JOHNSONITE OR APPROVED EQUAL

REFER TO ARCHITECTURAL SPECIFICATIONS FOR ADDITIONAL INFORMATION

PHOTO - EXISTING OFFICE FOR REFERENCE | SCALE 1/4" = 1'-0" | 7

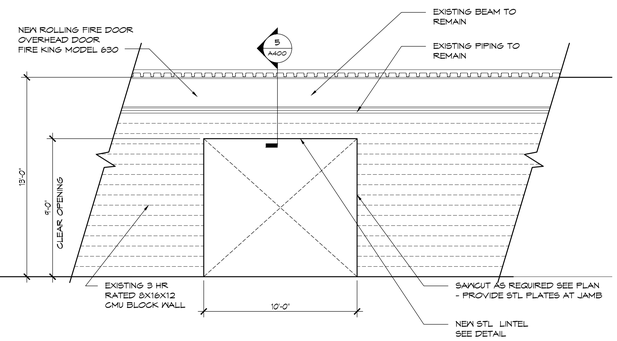

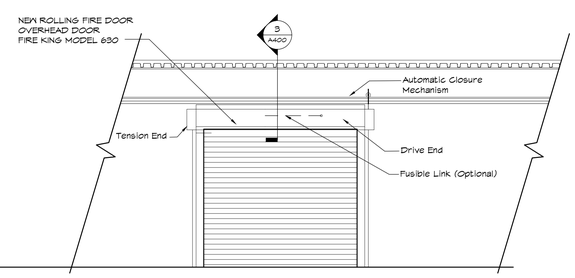

ELEVATION WITH DOOR

INTERIOR ELEVATION - NEW DOOR OPENING | SCALE 1/4" = 1'-0" | 1

SOSH
sosh architects | atlantic city, nj

ATLANTIC COUNTY VOTING MACHINE WAREHOUSE ALTERATION

235 DOLPHIN AVENUE
NORTHFIELD, NJ 08225

SUBMISSIONS

NO.	DATE:	DESCRIPTION:
	05/20/2022	CONSTRUCTION DOCUMENTS

DRAWING TITLE:
INTERIOR ELEVATIONS AND DETAILS

DRAWN BY:
REVIEWED BY:
PROJECT NO. 22013.00.001
DRAWING NO. A-400

DOOR TYPES

SCALE 1/2" = 1'-0" | 3

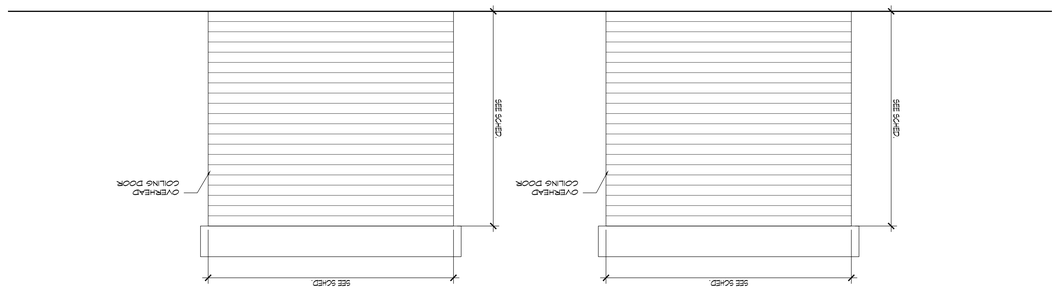

DOOR TYPE D
NON-RATED, NON-INSULATED
REFER TO A400 FOR DETAILS
AND MORE INFORMATION

NEW ROLLING COIL DOOR - MOTORIZED
MANUFACTURER (OR APPROVED EQUAL)-
OVERHEAD DOOR CO
NON-INSULATED
MODEL - 620

DOOR TYPE C
3 HR RATED, NON INSULATED
REFER TO A400 FOR DETAILS
AND MORE INFORMATION

NEW ROLLING FIRE DOOR
OVERHEAD DOOR
MOTORIZED - W/ FIRE ALARM
CLOSING ACTIVATION

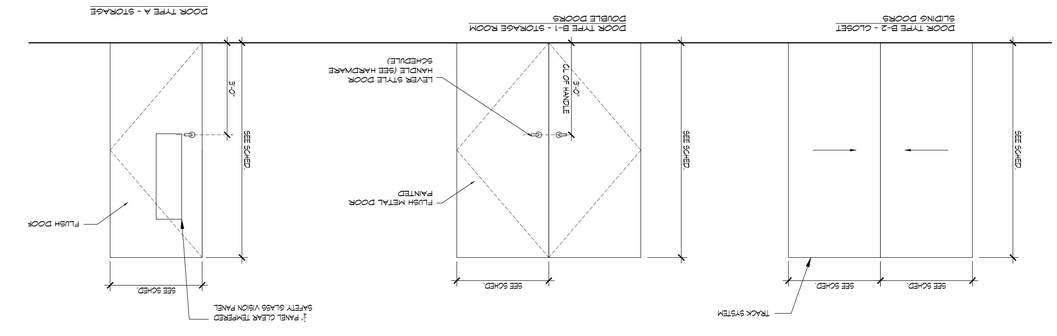

DOOR TYPE B-2 - CLOSET
SLIDING DOORS

DOOR TYPE B-1 - STORAGE ROOM
DOUBLE DOORS

DOOR TYPE A - STORAGE

FRAME TYPE

SCALE 1/2" = 1'-0" | 4

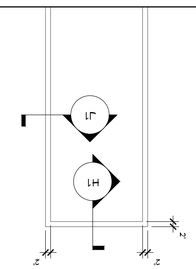

FRAME TYPE A

HARDWARE GROUPS

SCALE - | 5

HARDWARE GROUP (H-1)
STORAGE ROOMS
3 HEAVY DUTY HINGES
1 OVERHEAD DOOR CLOSER
1 DOORSTOP FLOOR MOUNT
1 OFFICE LOCKSET
2 ELECTRONIC LATCH WITH CARD SWPE
1 KICKPLATE EA SIDE
3 SLEEVES

PROVIDE CARD READER AND DOOR
SENSOR COORDINATE WITH SECURITY SYSTEM

HARDWARE GROUP (H-2)
DOUBLE DOORS - STANDARD STORAGE ROOMS
6 STANDARD HINGE
1 FLUSH BOLT AT DOOR HEAD
1 STOREROOM FUNCTION
1 FLOOR DOOR STOP
2 SURFACE CLOSER
2 KICK PLATE
1 DUMMY HANDLE

HARDWARE GROUP (H-3)
SLIDING DOUBLE DOORS
1 SLIDING DOOR TRACK
2 H/C ACCESSIBLE DOOR PULL

ADDITIONAL HARDWARE NOTES
1 DOORS TO BE KEYED ALIKE
2 COORDINATE WITH FACILITY STANDARD FOR ALL KEYNS AND CYLINDERS
3. ALL FINISHED TO BE BRUSHED STAINLESS STEEL.

HEAD AND JAMB DETAILS

SCALE - | 6

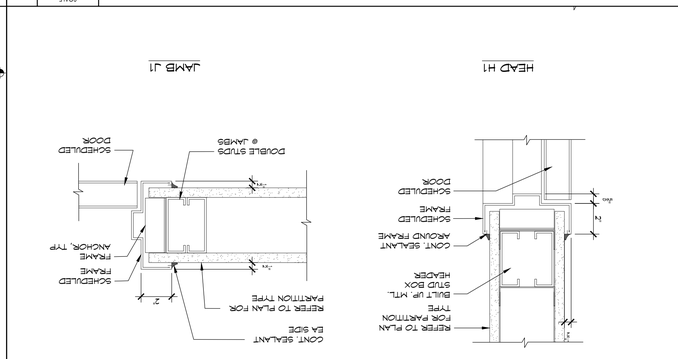

WINDOW TYPES

SCALE 1/2" = 1'-0" | 7

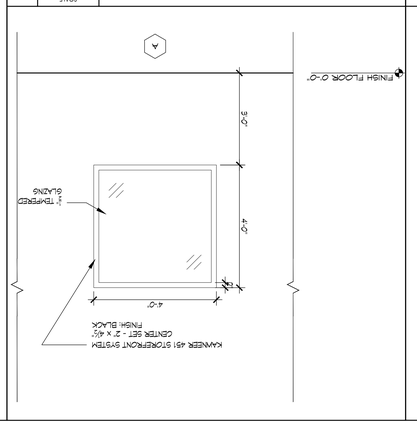

TYPICAL LIMITING HEIGHTS - INTERIOR PARTITIONS

STUD WIDTH	STUD SPACING	ALUM. SILL	VERTICAL DEFL. ONE LAYER	VERTICAL DEFL. TWO LAYERS	DEMING ONE LAYER
25 GAUGE STUD (2170 MN)					
1-5/8"	24"	L/240	4'-6"	10'-6"	8'-0"
	16"	L/240	6'-0"	8'-4"	7'-0"
2-1/2"	24"	L/240	12'-6"	15'-0"	11'-0"
	16"	L/240	10'-4"	11'-0"	9'-4"
3-5/8"	24"	L/240	15'-6"	15'-6"	12'-4"
	16"	L/240	20'-0"	20'-0"	16'-0"
6"	24"	L/240	15'-0"	15'-0"	15'-0"
	16"	L/240	16'-4"	16'-4"	14'-6"
22 GAUGE STUD (2270 MN)					
2-1/2"	24"	L/240	10'-0"	14'-0"	12'-0"
	16"	L/240	13'-0"	16'-0"	14'-0"
3-5/8"	24"	L/240	17'-0"	19'-4"	15'-0"
	16"	L/240	20'-0"	20'-0"	17'-0"
6"	24"	L/240	19'-0"	19'-0"	19'-0"
	16"	L/240	20'-0"	20'-0"	20'-0"
20 GAUGE STUD (3512 MN)					
2-1/2"	24"	L/240	13'-0"	16'-1"	13'-0"
	16"	L/240	13'-10"	16'-0"	13'-0"
3-5/8"	24"	L/240	17-11"	20'-2"	17'-0"
	16"	L/240	19'-1"	19'-7"	19'-0"
6"	24"	L/240	22'-0"	22'-4"	20'-4"
	16"	L/240	25'-0"	26'-0"	23'-4"
6"	24"	L/240	25'-0"	25'-0"	25'-0"
	16"	L/240	25'-0"	25'-0"	25'-0"
	24"	L/240	22'-10"	24'-11"	22'-0"

PARTITION TAG KEY

FIRE RATING
NOMINAL STUD SIZE
PARTITION NUMBER

PARTITION TYPE

PARTITION TYPES

SCALE N/A | 2

1. REFER TO REFLECTED CEILING PLANS AND/OR FINISH SCHEDULE FOR INFORMATION ON CEILING TYPE, FINISH AND HEIGHTS.
COORDINATE REQUIREMENTS FOR CEILING BLOCKING, FRAMING ETC. WITH PARTITIONS. IN NO CASE SHALL ANY FRAMING OR BLOCKING REQUIREMENTS COMPROMISE THE FIRE RATING SPECIFIED FOR ANY ASSEMBLY.
2. REFER TO INTERIOR ELEVATIONS AND/OR FINISH SCHEDULE FOR INFORMATION ON WALL FINISHES, BASE TRIM, MOLDING, ETC.
3. N/A
4. ALL PARTITIONS SHALL BE SECURELY FASTENED ABOVE AND BELOW TO THE STRUCTURAL SLAB OR STRUCTURAL FLOOR FRAMING.
5. FREE BLANKET BATT INSULATION SHALL BE PROVIDED AT INTERSECTIONS OF ALL CONCEALED HORIZONTAL AND VERTICAL SPACES, AS WELL AS ALL OTHER AREAS AS DEFINED IN THE CODE.
6. THE CONTRACTOR SHALL BE RESPONSIBLE FOR THE COORDINATION AND/OR PROVISION OF WATER-RESISTANT GYPSUM WALL BOARD AT ALL WET AREAS INCLUDING RESTROOMS, LAUNDRIES CLOSETS, KITCHENS, AND BARS FOR THE FULL HEIGHT OF WALLS.
7. THE CONTRACTOR SHALL BE RESPONSIBLE FOR THE COORDINATION OF THE METHOD AND SPACING OF SCREW ATTACHMENT OF GYPSUM WALL BOARD TO STRUCTURAL STUDS TO MEET ALL REQUIREMENTS OF THE MANUFACTURER, REMAINING TO BUT LIMITED TO: FIRE RATING, LIMITING HEIGHT, DEFLECTION, ETC.
8. FOR ADDITIONAL INFORMATION REGARDING EXTERIOR WALL CONSTRUCTION, REFER TO DETAIL SHEETS AND WALL SECTIONS.
9 STUDS THAT DO NOT MEET HEIGHT LIMITIONS AT THAT FLOOR AREA ARE TO BE BRACED AT 48" ON CENTER WITH 45° ANGLES TO STRUCTURE ABOVE OR INTERNALLY BRACED AT 5'-0" ON-CENTER VERTICALLY WITH CONTINUOUS 1-½" CHANNELS.
10. AT ALL FIRE RATED ASSEMBLIES CONTRACTOR SHALL STENCIL DURATION OF FIRE RATED ASSEMBLY ABOVE FINISHED CEILING (IE. 1 HR OR 2 HR ETC).
11. INTERIOR CMU SHALL BE "ANCHOR CONCRETE PRODUCTS" SMOOTH FACE UNITS, OR APPROVED EQUAL. MORTAR SHALL BE "LEHIGH" PORTLAND & LINE BLENDED MORTAR OR APPROVED EQUAL.

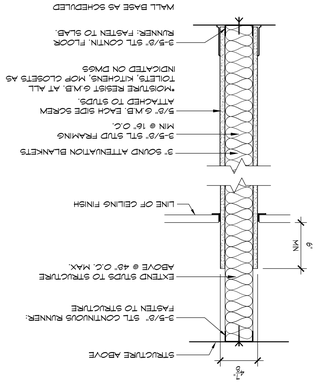

PARTITION TYPE

030 — SCALE : 1-1/2" = 1'-0"

060 — .060 PARTITION IS SAME AS .030 PARTITION, BUT USE 6" STEEL STUDS

DOOR SCHEDULE

SCALE N/A | 1

DOOR & FRAME SCHEDULE

DOOR #	ROOM #	ROOM NAME	DOOR TYPE	DOOR SIZE	DOOR THICKNESS	DOOR MATERIAL	DOOR FINISH	DOOR GLASS	HARDWARE GROUP	FRAME TYPE	FRAME MATERIAL	FRAME FINISH	FRAME HEAD	FRAME JAMB	FIRE RATING	REMARKS
FIRST FLOOR																
105	105	LOADING DOCK 02	D	10'-0" x 10'-0"	-	METAL	GALV	-	-	-	-	-	4/A400	-	0-HR	NOTE #1
106	106	STORAGE #2	C	10'-0" x 6'-0"	-	METAL	GALV	-	-	-	-	-	3/A400	-	3-HR	NOTE #1
107	107	STORAGE	B-1	(2) 3'-0" x 7'-0"	1-¾"	H.M.	PT-01	-	H-2	-	A	H.M.	PT-01	H1	J1	-
108A	108	STORAGE	A	3'-0" x 7'-0"	1-¾"	H.M.	PT-01	¼" TEMP	H-1	-	A	H.M.	PT-01	H1	J1	-
108B	108	STORAGE	A	3'-0" x 7'-0"	1-¾"	H.M.	PT-01	¼" TEMP	H-1	-	A	H.M.	PT-01	H1	J1	-
108C	108	STORAGE	B-2	(2) X'-0" x 7'-0"	1-¾"	H.M.	PT-01	-	H-3	-	A	H.M.	PT-01	H1	J1	-
108D	108	STORAGE	B-2	X'-0" x 7'-0"	1-¾"	H.M.	PT-01	-	H-3	-	A	H.M.	PT-01	H1	J1	-
104	104	STORAGE	A	3'-0" x 7'-0"	1-¾"	H.M.	PT-01	¼" TEMP	H-3	-	A	H.M.	PT-01	H1	J1	-
104A	104	STORAGE	B-2	(2) X'-0" x 7'-0"	1-¾"	H.M.	PT-01	-	H-3	-	A	H.M.	PT-01	H1	J1	-

ADDITIONAL DOOR NOTES

NOTE #1 - OVERHEAD DOOR CO. (OR APPROVED EQUAL MOTORIZED, RATED AS INDICATED)

SUBMISSIONS

NO.	DATE:	DESCRIPTION:
0	05/20/2022	CONSTRUCTION DOCUMENTS

DRAWING TITLE:
DOOR SCHEDULE & TYPES

DRAWN BY:
REVIEWED BY:
PROJECT NO.
2201 3.00.001
DRAWING NO.
A-900

ATLANTIC COUNTY VOTING MACHINE WAREHOUSE ALTERATION
235 DOLPHIN AVENUE
NORTHFIELD, NJ 08225

SOSH
sosh architects | atlantic city, nj

ABBREVIATIONS

AC	AIR CONDITIONING UNIT
ACR	AIR CURTAIN
AD	ACCESS DOOR
AF	AIRFOIL
AFF	ABOVE FINISHED FLOOR
AHU	AIR HANDLING UNIT
AL	ACOUSTICAL LINING
AMD	AIR MEASURING DEVICE
AP	ACCESS PANEL
AS	AIR SEPARATOR
ATC	AUTOMATIC TEMPERATURE CONTROL
B	BOILER
BAS	BUILDING AUTOMATION SYSTEM
BBD	BOILER BLOWDOWN
BD	BACKDRAFT DAMPER
BF	BOILER FEED UNIT
BFP	BACK FLOW PREVENTER
BFW	BOILER FEEDWATER
BFWP	BOILER FEEDWATER PUMP
BHP	BRAKE HORSEPOWER
BI	BACKWARD INCLINE
BOD	BOTTOM OF DUCT
BOP	BOTTOM OF PIPE
BOS	BOTTOM OF STEEL
BPD	BYPASS AIR DAMPER
BTU	BRITISH THERMAL UNIT
BTUH	BRITISH THERMAL UNIT PER HOUR
BV	BUTTERFLY VALVE
℄	CENTER LINE
CBD	CONTINUOUS BOILER BLOWDOWN
CC	COOLING COIL
CD	CEILING DIFFUSER
CF	CHEMICAL FEED UNIT
CFH	CUBIC FEET PER HOUR
CFM	CUBIC FEET PER MINUTE
CH	CHILLER
CHWR	CHILLED WATER RETURN
CHWS	CHILLED WATER SUPPLY
CI	CAST IRON
CIP	CLEAN IN PLACE
COMP	COMPRESSOR
CON	CONCENTRIC
COND	CONDENSATE
CP	CONDENSATE PUMP
CRU	COMPUTER ROOM AIR CONDITIONING UNIT
CS – __	CLEAN STEAM – PSIG
CT	COOLING TOWER
CU	CONDENSING UNIT
CUH	CABINET UNIT HEATER
CV	CONSTANT VOLUME / CONTROL VALVE
CVB	CONSTANT VOLUME BOX
CWR	CONDENSER WATER RETURN
CWS	CONDENSER WATER SUPPLY
DA	DIRECT ACTING
DB	DRY BULB
DC	DUST COLLECTOR
DDC	DIRECT DIGITAL CONTROLS
DEH	DEHUMIDIFIER
DHWS/R	DOMESTIC HOT WATER SUPPLY / RETURN
DIA./ø	DIAMETER
DIFF	DIFFERENTIAL
DISCH	DISCHARGE
DL	DOOR LOUVER
DN	DOWN
DR	DRAIN
DWDI	DOUBLE WIDTH DOUBLE INLET
DX	DIRECT EXPANSION
D/L	DRILLING AND LOOPING
(E)	EXISTING TO REMAIN
EAT	ENTERING AIR TEMPERATURE
EBB	ELECTRIC BASEBOARD RADIATION
EC	EVAPORATIVE CONDENSOR
ECC	ECCENTRIC
EDH	ELECTRIC DUCT HEATER
EDR	EQUIVALENT DIRECT RADIATION
EF	EXHAUST FAN
EG	EXHAUST GRILLE
EGE	EMERGENCY GENERATOR EXHAUST
EH	ELECTRIC HEATER
EJ	EXPANSION JOINT
EMCS	ENERGY MONITORING CONTROL SYSTEM
EP	ELECTRIC-PNEUMATIC
ER	EXHAUST REGISTER
ERU	ENERGY RECOVERY UNIT
ES	END SWITCH
ESP	EXTERNAL STATIC PRESSURE
ET	EXPANSION TANK
EUH	ELECTRIC UNIT HEATER
EWT	ENTERING WATER TEMPERATURE
EX	EXHAUST
(F)	FUTURE
°F	DEGREES FAHRENHEIT
F	FILTER
FC	FORWARD CURVED OR FLEX CONN.
FCU	FAN COIL UNIT
FCV	FLOW CONTROL VALVE
FD	FLOOR DRAIN OR FIRE DAMPER
FG	FIBERGLASS
FH	FUME HOOD
FHE	FUME HOOD EXHAUST
FLA	FULL LOAD AMPS
FM	FLOW METER
FOB	FLAT ON BOTTOM
FOR	FUEL OIL RETURN
FOS	FUEL OIL SUPPLY
FOT	FLAT ON TOP
FOV	FUEL OIL VENT
FPB	FAN POWERED BOX
FPM	FEET PER MINUTE
FPS	FEET PER SECOND
FRP	FIBERGLASS REINFORCED PIPE
FS	FLOW SWITCH
FT	FEET OR FLASH TANK
FT/WG	FEET WATER GAUGE
F&T	FLOAT & THERMOSTATIC TRAP
FTR	FINNED TUBE RADIATION
FV	FACE VELOCITY
FZ	FREEZESTAT
GPH	GALLONS PER HOUR
GPM	GALLONS PER MINUTE
GR	GRILLE OR GLYCOL RETURN
GRAV	GRAVITY
GS	GLYCOL SUPPLY
GV	GATE VALVE
H	HUMIDISTAT
HC	HEATING COIL
HD	HEAD
HEPA	HIGH EFFICIENCY PARTICULATE ARRESTANCE FILTER
HL	HIGH LIMIT
HOA	HAND-OFF AUTOMATIC SELECTOR SWITCH
H/O	HAND-OFF SELECTOR SWITCH WITH PILOT LIGHT
HP	HORSEPOWER OR HEAT PUMP
HPC	HIGH PRESSURE CONDENSATE
HPD	HIGH PRESSURE DRIP
HPS	HEAT PUMP SUPPLY
HPS	HEAT PUMP RETURN
HRU	HEAT RECOVERY UNIT
HUM	HUMIDITY OR HUMIDIFIER
HV	HEATING & VENTILATING UNIT
HW	HOT WATER
HWR	HOT WATER RETURN
HWS	HOT WATER SUPPLY
HX	HEAT EXCHANGER
Hz	HERTZ
ID	INSIDE DIAMETER
I/L	INTERLOCK
IN	INCH
IN/WG	INCHES WATER GAUGE
KW	KILOWATT
LAT	LEAVING AIR TEMPERATURE
LB	POUND(S)
LB/HR	POUNDS PER HOUR
LD	LINEAR DIFFUSER
LF	LINEAR FEET
LH	LATENT HEAT
LPC	LOW PRESSURE CONDENSATE
LPD	LOW PRESSURE DRIP
LPS	LOW PRESSURE STEAM
LR	LINEAR RETURN
LRA	LOCKED ROTOR AMPS
LVR	LOUVER
LWT	LEAVING WATER TEMPERATURE
MAU	MAKEUP AIR UNIT
MB	MIXING BOX
MBH	1000 BTU PER HOUR
MOD	MOTOR OPERATED DAMPER
MPR	MEDIUM PRESSURE STEAM RETURN
MPS	MEDIUM PRESSURE STEAM SUPPLY
MU	MAKE UP WATER
(N)	NEW
NC	NORMALLY CLOSED
NG	NATURAL GAS
NO	NORMALLY OPEN
NTS	NOT TO SCALE
OA	OUTSIDE AIR
OAD	OUTSIDE AIR DAMPER
OAI	OUTSIDE AIR INTAKE
OBD	OPPOSED BLADE DAMPER
OCC	OCCUPIED
OD	OUTSIDE DIAMETER
OED	OPEN END DUCT
OP	ORIFICE PLATE
OV	OUTLET VELOCITY
P	PUMP
PBD	PARALLEL BLADE DAMPER
PC – __	PUMPED CONDENSATE – PSIG
PD	PRESSURE DROP
PERF	PERFORATED
PH	PHASE
PHC	PREHEAT COIL
PNEU	PNEUMATIC
PRV	PRESSURE REDUCING VALVE
PSF	POUNDS PER SQUARE FOOT
PSIA	POUNDS PER SQUARE INCH ABSOLUTE
PSIG	POUNDS PER SQUARE INCH GAUGE
PT	PRESSURE TRANSMITTER
PVC	POLYVINYL CHLORIDE
(R)	REMOVE EXISTING
RA	RETURN AIR OR REVERSE ACTING
RAD	RADIATION
RCP	RADIANT CEILING PANEL
RD	RETURN AIR DAMPER
(RE)	RELOCATE EXISTING
RE	RELIEF AIR
REFR	REFRIGERANT
RELD	RELIEF DAMPER
RF	RETURN AIR FAN
RG	RETURN AIR GRILLE
RH	RELATIVE HUMIDITY
RHC	REHEAT COIL
RHG	REFRIGERANT HOT GAS
RL	REFRIGERANT LIQUID
RO	ROOF OPENING
RPM	REVOLUTIONS PER MINUTE
RR	RETURN AIR REGISTER
RS	REFRIGERANT SUCTION
RTU	ROOFTOP UNIT
RV	REFRIGERANT VENT
S – __	STEAM – PSIG
SA	SUPPLY AIR
SD	SMOKE DAMPER OR SUPPLY DIFFUSER
SDA	SOUND ATTENUATOR
SEF	SMOKE EXHAUST FAN
SF	SUPPLY AIR FAN
SG	SUPPLY AIR GRILLE
SH	SENSIBLE HEAT
SMD	SMOKE DETECTOR
SP	STATIC PRESSURE
SQ FT	SQUARE FEET
SR	SUPPLY AIR REGISTER
SRD	SAFETY RELIEF VALVE DISCHARGE
SRV	SAFETY RELIEF VALVE
SS	STAINLESS STEEL
STM	STEAM
SUCT	SUCTION
SWSI	SINGLE WIDTH SINGLE INLET
S/R	SUPPLY AND RETURN
T	THERMOSTAT
TAB	TESTING AND BALANCING
TAD	TRANSFER AIR DUCT
TF	TERMINAL AIR FILTER
TEMP	TEMPERATURE
TH	TOTAL HEAT
THERM	THERMOMETER
TOD	TOP OF DUCT
TOP	TOP OF PIPE
TOS	TOP OF STEEL
TP	TOTAL PRESSURE
TSP	TOTAL STATIC PRESSURE
TT	TEMPERATURE TRANSMITTER
UC	UNDERCUT
UH	UNIT HEATER
UNO	UNLESS NOTED OTHERWISE
UNOCC	UNOCCUPIED
UV	UNIT VENTILATOR
V	VENT OR VOLTS
VAC	VACUUM
VAV	VARIABLE AIR VOLUME
VB	VACUUM BREAKER
VD	MANUAL VOLUME DAMPER
VEL	VELOCITY
VF	VENTILATING FAN
VFD	VARIABLE FREQUENCY DRIVE
VI	VIBRATION ISOLATOR
VIB	VIBRATION
VIV	VARIABLE INLET VANES
VP	VACUUM PUMP
VTR	VENT THROUGH ROOF
WB	WET BULB
WC	WATER COLUMN
WG	WATER GAUGE
WMS	WIRE MESH SCREEN
WP	WATERPROOF
XP	EXPLOSION PROOF

DUCTWORK SYMBOLS

SYMBOL — DESCRIPTION

- SUPPLY/OUTSIDE AIR DUCT
- RETURN/EXHAUST AIR DUCT
- 45° ENTRY TAKEOFF, RECTANGULAR TO RECTANGULAR
- 90° TAKEOFF, RECTANGULAR TO ROUND, STRAIGHT
- 90° TAKEOFF, RECTANGULAR TO ROUND BELLMOUTH W/ MANUAL VOLUME DAMPER
- 90° TAKEOFF, ROUND TO ROUND, STRAIGHT
- 90° CONICAL TAKEOFF, ROUND TO ROUND
- 45° CONICAL LATERAL, ROUND TO ROUND
- 45° LATERAL, ROUND TO ROUND
- 45° WYE, ROUND TO ROUND
- END OF DUCT (CAPPED)
- SIDEWALL AIR TERMINAL W/VD (ARROWS DENOTE THROW DIRECTION)
- LINEAR DIFFUSER
- FD — FIRE DAMPER – VERTICAL POSITION
- FIRE DAMPER – HORIZONTAL POSITION
- FLEXIBLE CONNECTION
- MANUAL VOLUME DAMPER
- MOD — MOTOR OPERATED DAMPER
- SD — SMOKE DETECTOR (DUCT-MOUNTED)
- EXHAUST AIR DESIGNATION
- RETURN AIR DESIGNATION
- SUPPLY AIR DESIGNATION

PIPING SYMBOLS

SYMBOL — DESCRIPTION

- MANUAL BALANCING VALVE WITH PRESSURE TAPS SEE SPECIFICATIONS FOR TYPE
- BALL VALVE
- GATE VALVE
- GLOBE VALVE
- BUTTERFLY VALVE
- PLUG VALVE
- VACUUM BREAKER
- CHECK VALVE
- ANGLE SHUTOFF VALVE SEE SPECIFICATIONS FOR TYPE
- ANGLE BALANCING/SHUTOFF VALVE SEE SPECIFICATIONS FOR TYPE
- TRIPLE DUTY VALVE
- COMBINATION BALANCING/SHUTOFF VALVE W/PRESSURE TAPS
- PRESSURE REDUCING VALVE
- SAFETY/RELIEF VALVE – PLAN AND ELEVATION
- PUMP – GENERIC
- PUMP – END SUCTION
- BASKET STRAINER – ELEVATION AND PLAN
- Y-STRAINER WITH PLUG
- Y-STRAINER WITH DRAIN VALVE
- PRESSURE GAUGE WITH GAUGE COCK
- PRESSURE GAUGE WITH GAUGE COCK AND BOURDON TUBE
- THERMOMETER
- P/T — PRESSURE/TEMPERATURE TEST FITTING
- FM — FLOW METER
- PIPE UP AND DOWN
- TEE CONNECTION – STRAIGHT, DOWN, AND UP
- UNION
- END CAP
- BLIND FLANGE
- PIPE BELLOWS
- PIPE ANCHOR
- PIPE GUIDE (SLIDING)
- PIPE GUIDE (MOMENT)
- ELECTRICALLY HEAT TRACED PIPING
- AIR VENT – (MANUAL)
- AUTOMATIC AIR VENT
- CONCENTRIC REDUCER
- ECCENTRIC REDUCER
- F — STEAM TRAP – FLOAT AND THERMOSTATIC
- B — STEAM TRAP – BUCKET
- T — STEAM TRAP – THERMOSTATIC
- TH — STEAM TRAP – THERMODYNAMIC
- P → R — PITCH OF PIPE, RISE (R) DROP (D)
- W, H — EXPANSION LOOP AND SIZE

LINE DESIGNATIONS

CHWS	CHILLED WATER SUPPLY
CHWR	CHILLED WATER RETURN
CWS	CONDENSER WATER SUPPLY
CWR	CONDENSER WATER RETURN
HWS	HOT WATER SUPPLY
HWR	HOT WATER RETURN
HPS	HEAT PUMP SUPPLY
HPR	HEAT PUMP RETURN
GS	GLYCOL SUPPLY
GR	GLYCOL RETURN
FOS	FUEL OIL SUPPLY
FOR	FUEL OIL RETURN
FOV	FUEL OIL VENT
G	NATURAL GAS
C	COIL CONDENSATE DRAIN
MU	MAKE UP WATER
RV	REFRIGERANT VENT
RL	REFRIGERANT LIQUID
RS	REFRIGERANT SUCTION
(solid line)	EXISTING PIPING/DUCTWORK TO REMAIN (WITH SERVICE DESIGNATION)
(dashed line)	EXISTING PIPING/DUCTWORK TO BE REMOVED (WITH SERVICE DESIGNATION)

CONTROLS

SYM. SYM. AUTOMATIC CONTROL DAMPER SYMBOLS:

OA = OUTSIDE AIR SA = SUPPLY AIR
RA = RETURN AIR SD = SMOKE DAMPER
EA = EXHAUST AIR FS = FIRE/SMOKE
RE = RELIEF AIR
BD = BACKDRAFT DAMPER

- T — THERMOSTAT – DUCT MOUNTED
- T — THERMOSTAT – WALL MOUNTED
- H — HUMIDISTAT – DUCT MOUNTED
- H — HUMIDISTAT – WALL MOUNTED
- FZ — FREEZESTAT (LOW TEMPERATURE DETECTOR)
- SP — STATIC PRESSURE SENSOR – DUCT MOUNTED
- SP — SPACE STATIC PRESSURE SENSOR
- AUTOMATIC CONTROL VALVE (2 – WAY)
- AUTOMATIC CONTROL VALVE (3 – WAY)
- SOLENOID VALVE
- FS — FLOW SWITCH
- CO2 C — CO2 SENSOR
- CO — CO DETECTOR
- $ — SWITCH

MISC. DWG. SYMBOLS

- POINT OF CONNECTION
- POINT OF DISCONNECT
- POINT OF CONNECTION FOR FUTURE WORK
- EQUIPMENT SYMBOL
- EQUIPMENT NUMBER OR FLOW (GPM,CFM,ETC.)
- DETAIL NUMBER
- DETAIL DRAWING NUMBER
- SECTION NUMBER
- SECTION DRAWING NUMBER
- PLAN NUMBER
- PLAN DRAWING NUMBER
- KEYED DEMOLITION NOTE
- KEYED NEW WORK NOTE

APPLICABLE CODES & STANDARDS

THE FOLLOWING CODES AND STANDARDS APPLY TO THIS PROJECT:

1. INTERNATIONAL BUILDING CODE (IBC) 2018, NJ EDITION.
2. NJAC REHABILITATION SUB-CODE 5:23-6
3. INTERNATIONAL MECHANICAL CODE (IMC) 2018.
4. INTERNATIONAL FUEL GAS CODE (IFGC) 2018.
5. NATIONAL STANDARD PLUMBING CODE (NSPC) 2018
6. NFPA 70 – NATIONAL ELECTRICAL CODE (NEC) 2017

GENERAL PROJECT SPECIFICATIONS

1. IF THE CONTRACTOR DISCOVERS A DISCREPANCY BETWEEN THE PROJECT'S TECHNICAL BOOK SPECIFICATIONS AND THE DRAWING SPECIFICATIONS, THE CONTRACTOR SHALL IMPLEMENT THE MORE STRINGENT OF THE TWO.
2. ALL WORK SHALL FOLLOW THE REFERENCED APPLICABLE CODES AS ADOPTED AND MODIFIED BY THE STATE OF NEW JERSEY.
3. ALL WORK CONTAINED WITHIN THE MECHANICAL DRAWINGS AND SPECIFICATIONS IS THE RESPONSIBILITY OF THE SINGLE PRIME CONTRACTOR UNLESS OTHERWISE NOTED.
4. NOT ALL SYMBOLS, ABBREVIATIONS AND LINE DESIGNATIONS ARE NECESSARILY USED ON THIS PROJECT.
5. ALL HVAC EQUIPMENT, DUCTWORK, PIPING, SUPPORTS AND ACCESSORY LOCATIONS AND ROUTING SHALL BE COORDINATED WITH ALL OTHER TRADES AND FIELD VERIFIED PRIOR TO INSTALLATION TO PROVIDE REQUIRED CLEARANCES FOR ALL OTHER SYSTEMS.
6. SUPPLY, RETURN AND EXHAUST AIR OPENING LOCATIONS AND SIZES FOR ROOF MOUNTED MECHANICAL EQUIPMENT ARE SHOWN FOR DUCTWORK ROUTING ONLY. THE MECHANICAL CONTRACTOR SHALL VERIFY THE ACTUAL SIZES OF DUCT CONNECTIONS AND THE REQUIRED ROOF OPENING SIZES FOR THE ROOF MOUNTED EQUIPMENT AND COORDINATE THE FINAL LOCATION OF ROOF PENETRATIONS WITH THE GENERAL CONTRACTOR.
7. THE CONTRACTOR PROVIDING MECHANICAL TRADE WORK SHALL INSTALL ALL ROOF MOUNTED MECHANICAL EQUIPMENT CURBS AND FLASHING AND COORDINATE WITH THE CONTRACTOR PROVIDING GENERAL TRADES PRIOR TO THE APPLICATION OF THE BUILDING ROOFING. THE CONTRACTOR PROVIDING MECHANICAL TRADE WORK SHALL ALSO INSTALL ALL NECESSARY ROOF CURB COUNTER-FLASHING TO ACHIEVE A WATERTIGHT ROOFING SEAL.
8. DUCTWORK MAINS AND BRANCHES ARE SHOWN DIAGRAMMATICALLY AND FOR DESIGN CLARITY AND AT THE ROOM LEVEL ROUTING AND ARRANGEMENT IS SHOWN TO MINIMIZE NOISE CARRYOVER FROM MECHANICAL EQUIPMENT AND ADJOINING SPACES. CONTRACTOR MAY PROPOSE REROUTING, OFFSETS, RISES AND DROPS AS NECESSARY TO CLEAR INSTALLED TRUSSES, JOISTS AND OTHER INTERFERENCES. FINAL DUCTWORK LAYOUT WILL BE APPROVED IN REQUIRED DUCTWORK SHOP DRAWING SUBMITTAL REVIEW PRIOR TO INSTALLATION. DEVIATIONS FROM APPROVED DUCTWORK SHOP DRAWING TO SUIT FIELD CONDITIONS SHALL BE SUBMITTED TO THE ENGINEER FOR APPROVAL PRIOR TO INSTALLATION.
9. ALL PIPING/DUCTWORK/CONTROLS PENETRATING FIRE RATED PARTITIONS, WALLS AND CEILINGS SHALL BE SEALED ON BOTH SIDES USING AN APPROVED, UL LISTED FIRE SEALANT TO MATCH EXISTING WALL FIRE RATING. WHERE A PIPE/DUCT/CONTROL CONDUIT HAS BEEN REMOVED THAT PREVIOUSLY PENETRATED A FIRE RATED PARTITION, WALL OR CEILING, THE CONTRACTOR SHALL PATCH AND SEAL THE PENETRATION ON BOTH SIDES USING AN APPROVED, UL LISTED FIRE SEALANT TO MATCH EXISTING WALL FIRE RATING. ALL FIRESTOP SYSTEMS SHALL BE TESTED IN ACCORDANCE WITH ASTM E814. REFER TO SPECIFICATIONS FOR ADDITIONAL INFORMATION.
10. CONTRACTOR SHALL RE-APPLY FIREPROOFING IN TYPE AND THICKNESS TO MATCH EXISTING IN ANY AREAS WHERE EXISTING FIREPROOFING IS DAMAGED DO TO DEMOLITION OR NEW WORK ACTIVITIES. REFER TO ARCHITECTURAL SPECIFICATIONS FOR ADDITIONAL INFORMATION.
11. CONTRACTOR SHALL COORDINATE THE REPLACEMENT OF MECHANICAL EQUIPMENT WITH THE FACILITIES STAFF AND THE OWNER IN ADDITION TO ALL OTHER WORK BEING COMPLETED UNDER SEPARATE CONTRACTS. ALL ITEMS BEING REMOVED AS PART OF THE UPGRADES SHALL BE REMOVED FROM THE PREMISES AND DISPOSED OF IN ACCORDANCE WITH LOCAL REGULATIONS.
12. MECHANICAL CONTRACTOR SHALL COORDINATE WITH ELECTRICAL CONTRACTOR IN REGARDS TO THE DISCONNECT AND RECONNECT OF ALL EQUIPMENT BEING REMOVED AND/OR REPLACED IN-KIND AS INDICATED ON THE CONTRACT DOCUMENTS.
13. MECHANICAL CONTRACTOR SHALL FURNISH LOOSE MOTOR STARTERS AND DISCONNECT SWITCHES FOR INSTALLATION AND WIRING BY THE ELECTRICAL CONTRACTOR.
14. <u>ELECTRICAL COORDINATION</u>: CONTRACTOR PROVIDING MECHANICAL TRADE WORK SHALL COORDINATE VOLTAGES FOR EACH PIECE OF EQUIPMENT BEFORE PURCHASING EQUIPMENT WITH CONTRACTOR PROVIDING ELECTRICAL TRADE WORK.
15. HVAC TESTING & BALANCING (AIR & WATER) IS A PART OF THIS CONTRACT. CONTRACTOR SHALL SUBMIT SIGNED AND SEALED TEST & BALANCE REPORTS, REFER TO PROJECT BOOK SPECIFICATIONS FOR DETAILS.
16. CONTRACTOR SHALL PROVIDE FLEXIBLE CONNECTIONS AT ALL DUCT CONNECTIONS TO EQUIPMENT. IF DUCT CONNECTION TO EQUIPMENT CANNOT BE MADE WITHOUT A HARD CONNECTION (E.G. MIXING BOX/FILTER RACK ASSEMBLY), CONTRACTOR SHALL PROVIDE FLEX CONNECTIONS FOR ALL DUCT CONNECTING WITH A HARD CONNECTION TO EQUIPMENT.
17. ALL EXISTING WALLS, CEILINGS, ROOF, FLOORS AND OTHER FINISHED SURFACES DAMAGED OR MODIFIED SHALL BE REPAIRED TO MATCH ADJACENT UNDISTURBED AREA. PATCH AND REPAIR SHALL MATCH EXISTING ADJACENT SURFACES AS TO THICKNESS, TEXTURE, MATERIALS AND COLOR. ALL ABANDONED OPENINGS SHALL BE PATCHED AND REPAIRED TO MATCH ADJACENT UNDISTURBED AREA AND ARCHITECTURE. ALL ROOF PENETRATIONS SHALL BE PERFORMED SUCH THAT WARRANTY IS MAINTAINED.
18. CONTRACTOR SHALL REMOVE, STORE AND RE-INSTALL ALL CEILING TILES AS REQUIRED TO ACCESS ABOVE CEILING AREAS TO ROUTE NEW PIPING OR INSTALL EQUIPMENT. CONTRACTOR SHALL SUPPLY MATCHING CEILING TILES FOR ANY BROKEN TILES THAT OCCUR DURING THE CONSTRUCTION.
19. CONTRACTOR SHALL MODIFY SPRINKLER PIPING SYSTEMS AS REQUIRED TO ALLOW NEW EQUIPMENT INSTALLATION AND DUCTWORK MODIFICATIONS. WORK SHALL BE PERFORMED BY A CERTIFIED SPRINKLER CONTRACTOR.
20. ALL NECESSARY STAGING AND MATERIAL STORAGE AREAS SHALL BE AS DIRECTED AND APPROVED BY THE OWNER.
21. ALL SYSTEMS THAT NEED TO BE DRAINED SHALL BE COORDINATED WITH THE OWNER.
22. ALL WORK SHALL BE PERFORMED TO NOT INTERFERE WITH THE NORMAL OPERATION OF THE FACILITIES. COORDINATE ANY NECESSARY SHUTDOWNS WITH THE FACILITY. MINIMIZE SHUTDOWNS TO LIMIT IMPACT OF INTERRUPTION OF COOLING, HEATING, DHW AND ELECTRICAL SERVICE TO THE FACILITY.
23. ALL MEANS OF EGRESS MUST BE KEPT FREE AND CLEAR OF ALL MATERIAL.
24. VERIFY ALL CONDITIONS, ELEVATIONS AND MEASUREMENTS SHOWN ON CONTRACT DRAWINGS. ALL DIMENSIONS AND ELEVATIONS FOR NEW AND EXISTING EQUIPMENT, PIPING AND APPARATUS ARE APPROXIMATE AND ARE ONLY FOR REFERENCE. SUBMIT SHOP DRAWINGS SHOWING ALL DIMENSIONS AND ELEVATIONS VERIFIED IN THE FIELD.
25. CONTRACTOR SHALL TEMPORARILY RELOCATE ALL PIPING, ELECTRICAL CONDUITS, LIGHTING, CONTROLS, ETC., TO ACCOMMODATE WORK UNDER THIS CONTRACT. RESTORE TO INITIAL OPERATING CONDITION AND FUNCTION UPON COMPLETION OF WORK. EXISTING PIPING IN WORK AREA SMALLER THAN 2" AND CONDUITS SMALLER THAN 1" ARE NOT EXPLICITLY SHOWN. CONDUCT FIELD SURVEY AS REQUIRED TO DETERMINE EXISTING CONDITIONS.
26. PROVIDE VALVED DRAINS ON ALL WATER PIPING SYSTEM LOW POINTS AND AS REQUIRED ON NEW EQUIPMENT. PROVIDE AIR VENTS AT PIPING SYSTEM HIGH POINTS AS REQUIRED FOR RELEASING AIR DURING STARTUP.
27. NO PIPING SMALLER THAN 3/4" EXCEPT AS NOTED.
28. PROVIDE WIRING AND RACEWAYS RELATED TO CONTROL OF MECHANICAL EQUIPMENT. RACEWAYS TO BE MINIMUM 3/4" RIGID CONDUIT.
29. CONTRACTOR SHALL REFER TO SPECIFICATIONS FOR MATERIAL PIPE SIZE & MATERIAL TYPE BY SYSTEM. FOR SYSTEMS REQUIRING DISISIMILAR METALS CONTRACTOR SHALL PROVIDE GALVANIC CORROSION AND CATHODIC PROTECTION (DIELECTRIC UNION, DIELECTRIC FITTING, ETC.) IN ACCORDANCE WITH THE SPECIFICATIONS.
30. CONTRACTOR IS RESPONSIBLE FOR CONDUCTING WALK-THROUGH OF SITE PRIOR TO SUBMITTING BID TO BE FAMILIAR WITH SITE CONDITIONS AND REQUIREMENTS.
31. THE CONTRACTOR SHALL PROVIDE ALL REQUIRED CALCULATIONS (SIGNED AND SEALED BY AN ENGINEER LICENSED IN THE STATE OF NEW JERSEY) AND INSTALLATION INFORMATION TO SHOW COMPLIANCE WITH SEISMIC AND WIND FORCES IN ACCORDANCE WITH THE INTERNATIONAL BUILDING CODE 2018, NJ EDITION. INFORMATION SHALL BE MADE AVAILABLE TO ENGINEER FOR REVIEW AND ALSO, MADE AVAILABLE UPON REQUEST FOR SUBMISSION TO CODE ENFORCEMENT. PROVIDE ALL SUPPORT SYSTEMS, SUPPLEMENTAL STEEL, ANCHORS, PIPE HANGERS AND ENGINEERING DOCUMENTATION NECESSARY TO PROVIDE A COMPLETE CODE COMPLIANT SYSTEM.

<u>ALTERATIONS TO EXISTING SYSTEMS AND DEMOLITION</u>

1. IT IS THE INTENT THAT ALL EXISTING PIPING, DUCTWORK, FIXTURES AND OTHER EQUIPMENT AND MATERIALS THAT INTERFERE WITH THE ALTERED EXISTING BUILDING ARRANGEMENTS AND NEW SYSTEMS BE REMOVED, RELOCATED, REROUTED OR ABANDONED. THE DRAWINGS GENERALLY INDICATE MAJOR ITEMS OF EXISTING MATERIALS AND EQUIPMENT THAT ARE TO BE REMOVED, RELOCATED, REROUTED OR ABANDONED BY EACH TRADE. IT IS NOT POSSIBLE TO INDICATE ALL RELATED ACCESSORIES, SPECIALTIES AND OTHER MINOR ITEMS. HOWEVER, THEIR REMOVAL, RELOCATIONS, REROUTING OR ABANDONMENT SHALL ALSO BE INCLUDED IN THIS CONTRACT AND SHALL BE DONE AT NO ADDITIONAL COST TO THE OWNER.
2. EXISTING CONCEALED AND EXPOSED EQUIPMENT AND MATERIALS THAT WILL BECOME ABANDONED DUE TO NEW WORK SHALL BE REMOVED BACK TO ACTIVE RISER AND MAIN AND PROPERLY PLUGGED OR CAPPED BEHIND FINISHED SURFACES.
3. ALL EXISTING PIPING TO BE DEMOLISHED MAY NOT BE SHOWN. CONTRACTOR SHALL DURING PRE-BID SITE VISIT DETERMINE EXTENT OF DEMOLITION AND INCLUDE COST OF THIS WORK IN BID. SHOULD A CONTRACTOR REQUIRE REMOVAL, RELOCATION OR REROUTING OF ANOTHER TRADE'S WORK THAT IS NOT INDICATED ON DRAWINGS, THE CONTRACTOR REQUIRING SUCH WORK SHALL BE RESPONSIBLE FOR THAT WORK, AND PAY ALL REQUIRED COSTS. ALL UNKNOWN BELOW SLAB PIPING ENCOUNTERED DURING INSTALLATION OF NEW WORK SHALL BE REMOVED AND CAPPED OFF AT ACTIVE MAIN OR BRANCH. ALLOWANCE SHALL BE MADE FOR THESE ITEMS IN BID PRICE.
4. EXISTING EQUIPMENT AND MATERIALS THAT ARE TO REMAIN, BUT BECOME EXPOSED DUE TO NEW WORK, SHALL BE RELOCATED AND RECONNECTED AS DIRECTED BY ARCHITECT.
5. ALL WORK INVOLVING ALTERATIONS TO EXISTING SYSTEMS, EQUIPMENT AND MATERIALS SHALL BE REVIEWED WITH ARCHITECT AND OWNER BEFORE BEGINNING WORK.
6. REMOVED EQUIPMENT AND MATERIALS NOT DESIRED BY OWNER SHALL BECOME PROPERTY OF CONTRACTOR AND SHALL BE PROMPTLY REMOVED FROM SITE. EQUIPMENT AND MATERIALS DESIRED BY OWNER SHALL BE DELIVERED BY CONTRACTOR TO AN ON-SITE STORAGE LOCATION DESIGNATED BY OWNER.
7. THE CONTRACTOR MUST SURVEY AND VERIFY LOCATIONS AND PHYSICAL SIZES OF ALL EXISTING ITEMS AND DETERMINE WHETHER RELOCATION OR REROUTING WILL BE REQUIRED. IF RELOCATION OR REROUTING IS REQUIRED, INCLUDING THAT OF ALL RELATED ACCESSORIES, SPECIALTIES AND OTHER MINOR ITEMS, THE CONTRACTOR SHALL INCLUDE ALL NECESSARY WORK AS PART OF HIS CONTRACT AND IT SHALL BE DONE AT NO ADDITIONAL COST TO THE OWNER.
8. CONTRACTOR SHALL PATCH AND REPAIR ALL ROOF, FLOOR AND WALL OPENINGS RESULTING FROM THE DEMOLITION OF EXISTING MECHANICAL EQUIPMENT, DUCTWORK, PIPING, DEVICES, ETC. COORDINATE THIS WORK WITH OWNER'S REPRESENTIVES PRIOR TO DEMOLITION.

<u>CONTINUITY OF EXISTING SYSTEMS AND SERVICES</u>

1. ALL WORK SHALL BE PERFORMED AT SUCH TIME AND IN SUCH MANNER AS WILL LEAST INTERFERE WITH MAINTENANCE AND OPERATION OF OWNER'S ACTIVITIES. PROVISIONS SHALL BE MADE TO PERMIT OWNER'S USE OF ALL THE BUILDING AND OF EXISTING SYSTEMS AT ALL TIMES. PROVIDE TEMPORARY FACILITIES TO SECURE THESE CONDITIONS. REMOVE TEMPORARY FACILITIES WHEN PERMANENT WORK HAS BEEN PLACED INTO SERVICE.
2. FULLY COORDINATE WITH ARCHITECT, OWNER AND ALL OTHER TRADES, ALL WORK INVOLVING SHUT-DOWN AND INTERRUPTION OF EXISTING SYSTEMS AND SERVICE.
3. SHUT-DOWN OF EXISTING SERVICES WHERE REQUIRED TO INSTALL NEW SYSTEMS OR ALTER EXISTING, SHALL BE PERFORMED DURING HOURS THAT THE BUILDING IS NOT BEING USED BY OWNER. ALL COSTS FOR PERFORMING THIS WORK SHALL BE BORNE BY THE CONTRACTOR AND WITHOUT "EXTRA" COST TO THE OWNER.
4. EXISTING SYSTEMS AND SERVICES THAT ARE TEMPORARILY DISCONNECTED, BUT ARE TO REMAIN IN USE, SHALL BE PERMANENTLY RECONNECTED AND RETURNED TO PROPER OPERATION.
5. FULLY COORDINATE WITH ARCHITECT, OWNER AND OTHER TRADES TO INSURE COMPLETE CONTINUITY OF ALL SYSTEMS AND SERVICES.

GENERAL PROJECT NOTES (CONT'D)

<u>GRILLES, REGISTERS AND DIFFUSERS</u>

1. ALL SIZES OF CEILING DIFFUSERS, EXHAUST GRILLES AND RETURN GRILLES SHOWN ON DRAWINGS ARE MODUAL SIZES, NECK SIZES ARE INDICATED WITH THE ABREVIATION OF "NK".
2. ALL CEILING DIFFUSERS SHOWN ON DRAWINGS ARE 4-WAY UNLESS OTHERWISE NOTED.
3. ALL CEILING DIFFUSERS SHALL HAVE OPPOSED BLADE DAMPERS. ALL SIDEWALL MOUNTED SUPPLY GRILLES SHALL BE DOUBLE DEFLECTION UNLESS OTHERWISE NOTED.
4. ALL CEILING DIFFUSERS SHALL BE OF ALUMINUM CONSTRUCTION UNLESS OTHERWISE NOTED.
5. PROVIDE SQUARE TO ROUND ADAPTORS AS NECESSARY.
6. ALL CEILING DIFFUSERS SHALL BE 24"X24" LAY-IN MODULES UNLESS OTHERWISE NOTED.

<u>DUCTWORK</u>

1. UNLESS OTHERWISE NOTED, ALL DUCTWORK SHALL BE CONSTRUCTED OF GALVANIZED SHEET METAL G90 GRADE PER SMACNA. ALL DUCTS CONSTRUCTED OF GALVANIZED STEEL SHEET METAL SHALL HAVE MINIMUM GAGE THICKNESS AS FOLLOWS:

MAXIMUM SIDE (IN.)	GAGE
THROUGH 12	26
13 – 30	24
31 – 54	22
55 – 84	20
OVER 84	16

DIAMETER (IN.)	GAGE
THROUGH 12	26
13 – 18	24
19 – 28	22
29 – 36	20
37 – 52	18

PROVIDE ALL NECESSARY CROSS-BREAKING AND DUCT REINFORCING AS REQUIRED PER SMACNA RECOMMENDATIONS.

2. ALL DUCTWORK SHALL BE DESIGNED, CONSTRUCTED AND INSTALLED PER SMACNA STANDARDS.
3. ALL JOINTS, LONGITUDINAL AND TRANSVERSE SEAMS AND CONNECTIONS IN DUCTWORK SHALL BE SECURELY FASTENED AND SEALED WITH WELDS, GASKETS, MASTICS (ADHESIVES), MASTIC-PLUS-EMBEDDED-FABRIC SYSTEMS, LIQUID SEALANTS OR TAPES. CLOSURE SYSTEMS, TAPES AND MASTICS USED TO SEAL METALLIC AND FLEXIBLE AIR DUCTS AND FLEXIBLE AIR CONNECTORS SHALL COMPLY WITH UL 181B AND SHALL BE MARKED "181B-FX" FOR PRESSURE-SENSITIVE TAPE OR "181B-M" FOR MASTIC. DUCT CONNECTIONS TO FLANGES OF AIR DISTRIBUTION SYSTEM EQUIPMENT SHALL BE SEALED AND MECHANICALLY FASTENED. MECHANICAL FASTENERS FOR USE WITH FLEXIBLE NONMETALLIC AIR DUCTS SHALL COMPLY WITH UL 181B AND SHALL BE MARKED "181B-C." CLOSURE SYSTEMS USED TO SEAL METAL ALL DUCTWORK SHALL BE INSTALLED IN ACCORDANCE WITH THE MANUFACTURER'S INSTALLATION INSTRUCTIONS.
4. DUCT SIZES SHOWN ON DRAWINGS ARE CLEAR DIMENSIONS.
5. COORDINATE LOCATION OF DUCTWORK, PIPING, AND DIFFUSERS WITH ALL OTHER TRADES.
6. ALL DUCTWORK AND PIPING ABOVE CEILING AND IN AREAS WITHOUT CEILINGS SHALL BE INSTALLED AS HIGH AS POSSIBLE.
7. PROVIDE VOLUME DAMPERS AT ALL DUCT BRANCHES AND RUNOUTS. PROVIDE OPPOSED BLADE VOLUME DAMPERS AT ALL REGISTERS, GRILLES AND DIFFUSER NECKS IN SUPPLY, RETURN AND EXHAUST DUCTWORK WHETHER SHOWN ON DRAWINGS OR NOT.
8. PROVIDE AT MINIMUM 10 GAUGE STEEL SLEEVES FOR ALL DUCT PENETRATIONS THROUGH FIRE RATED WALLS, FLOORS AND PARTITIONS. PROVIDE PIPE SLEEVES FOR ALL MECHANICAL PIPING PENETRATING THROUGH FIRE RATED WALLS, FLOORS AND PARTITIONS. SEAL ALL ANNULAR SPACE BETWEEN SLEEVES AND DUCTWORK OR PIPING WITH A FIRE BARRIER MATERIAL EQUAL TO 3M "PENETRATION SEALING SYSTEM".
9. THE INSIDE OF ALL DUCTWORK VISIBLE THROUGH A GRILLE OR DIFFUSER SHALL BE PAINTED FLAT BLACK.
10. THE MECHANICAL CONTRACTOR SHALL COORDINATE EXACT LOCATIONS OF MASONRY RETURN AIR OPENINGS AND RECESSED EQUIPMENT WITH THE GENERAL CONTRACTOR. PROVIDE GALVANIZED STEEL LINTELS ABOVE ALL MASONRY AND CONCRETE WALL PENETRATIONS MADE BY DUCTS AND/OR PIPING.
11. ALL RETURN AIR OPENINGS SHALL BE ABOVE CEILING UNLESS NOTED OTHERWISE. PROVIDE AND INSTALL WIRE MESH SCREENS ON ALL OPENINGS.
12. ALL PIPING AND DUCTS IN FINISHED ROOMS OR SPACES SHALL BE CONCEALED IN FURRED CHASES OR SUSPENDED CEILING.
13. PROVIDE RETURN AIR OPENINGS AS REQUIRED. OPENING SHALL BE SIZED FOR REQUIRED CFM AT A VELOCITY NOT TO EXCEED 400 FEET PER MINUTE. PROVIDE LINTELS AS REQUIRED.
14. SUPPORTS FOR DUCTS SHALL BE INSTALLED AT INTERVALS OF NOT MORE THAN 10 FEET.
15. FLEXIBLE DUCTWORK CONCEALED ABOVE CEILING SHALL BE EQUAL TO THERMAFLEX PRO SERIES G-KM INSULATED FLEXIBLE DUCT (R-VALUE=4.2) WITH POLYETHYLENE VAPOR BARRIER JACKETING. FLEXIBLE DUCT EXPOSED TO VIEW SHALL BE EQUAL TO THERMAFLEX PRO SERIES M-KE INSULATED FLEXIBLE DUCTWORK WITH REINFORCED METALLIZED VAPOR BARRIER JACKETING. FLEX DUCT SHALL BE U.L. LISTED AND LABELED AS A CLASS 1 AIR DUCT, STANDARD 181. FLEX DUCT SHALL BE CONNECTED TO BRANCHES AND MAINS USING CONICAL FITTINGS AND SHALL NOT EXCEED 10'-0" IN LENGTH INCLUDING ONE ELBOW. FLEXIBLE DUCTWORK SHALL NOT BE USE AS RETURN AIR OR EXHAUST DUCTWORK.
16. PROVIDE TYPE "B", DYNAMIC FIRE DAMPERS IN DUCTS WHERE DUCT PENETRATES FIRE-RATED WALLS, FLOORS CEILINGS, ETC. WHERE SHOWN ON DRAWINGS AND AS REQUIRED BY THE 2018 INTERNATIONAL MECHANICAL CODE AS ADOPTED BY NEW JERSEY. FIRE DAMPERS SHALL COMPLY WITH REQUIREMENTS OF UL 555. DAMPERS SHALL HAVE A MINIMUM RATING OF 1-1/2 HOURS FOR PENETRATIONS OF LESS THAN 3-HOUR FIRE-RESISTANCE-RATED ASSEMBLIES AND A MINIMUM RATING OF 3 HOURS FOR PENETRATIONS OF 3-HOUR OR GREATER FIRE-RESISTANCE-RATED ASSEMBLIES. PROVIDE ACCESS DOORS FOR ALL DAMPERS OR OTHER APPROVED MEANS OF ACCESS.
17. DUCT SMOKE DETECTORS AND ASSOCIATED AUDIO/VISUAL DEVICES SHALL BE FURNISHED AND WIRED BY FIRE ALARM CONTRACTOR. MECHANICAL CONTRACTOR SHALL BE RESPONSIBLE TO INSTALL ALL DUCT SMOKE DETECTORS AND INSTALL ALL REQUIRED CONTROL WIRING TO AUTOMATICALLY SHUT DOWN FANS AS OUTLINED IN SPECIFICATION.
18. COORDINATE ALL EXTERIOR LOUVERS REQUIREMENTS WITH GENERAL CONTRACTOR AND ALL OTHER ASSOCIATED TRADES. GENERAL CONTRACTOR SHALL BE RESPONSIBLE FOR INSTALLING ALL EXTERIOR LOUVERS.
19. COORDINATE ALL ROOF PENETRATIONS WITH WORK OF OTHER TRADES AND WITH FLASHING REQUIREMENTS.
22. PROVIDE COMBINATION FIRE SMOKE DAMPERS (DYNAMIC, RATED AND INSTALLED ACCORDING TO UL555 AND UL555S BY AN NRTL. CLOSING RATING IN DUCTS UP TO 4"W.C. STATIC PRESSURE CLASS AND MINIMUM 2000 FPM VELOCITY. 1½ HR FIRE RATING), HAT SHAPE FRAME (0.063"THICK GALVANIZED SHEET STEEL WITH INTERLOCKING, GUSSETED CORNERS AND MOUNTING FLANGE), HEAT RESPONSIVE DEVICE (RESETTABLE, 350°F RATED FIRE-CLOSURE DEVICE), SMOKE DETECTOR, TWO-POSITION ACTION DAMPER MOTOR, AUX SWITCHES FOR INTEGRAL FAN CONTROL OR MOTOR DAMPER POSITION, TEST & RESET SWITCHES.

<u>DUCTWORK INSULATION</u>

1. ALL RIGID ROUND AND RECTANGULAR SUPPLY AND RETURN SHEET METAL DUCT "CONCEALED FROM VIEW" SHALL BE WRAPPED WITH 1-1/2" THICK FIBERGLASS DUCT INSULATION HAVING A CONDUCTIVITY OF .26 AT MEAN TEMPERATURE OF 75 DEGREES F. AND A DENSITY OF 1/5 PCF. INSULATION SHALL BE SCHULLER "MICRO-LITE" OR APPROVED EQUAL. THIS INCLUDES DUCTWORK BEYOND 25' OF AN AIR HANDLER.
2. ALL RIGID ROUND AND RECTANGULAR SUPPLY AND RETURN SHEET METAL DUCTWORK "EXPOSED TO VIEW" SHALL BE DOUBLE WALL (INTERNAL AND EXTERNAL METAL) WITH INTERSTITIAL INSULATION. INNER DUCT SHALL BE SOLID SHEET STEEL. INSULATION SHALL BE (1") INCH THICK FLEXIBLE ELASTOMERIC DUCT LINER COMPLYING WITH ASTM C 534, TYPE II FOR SHEET MATERIALS, AND NFPA 90A OR NFPA 90B. INSULATION MAXIMUM THERMAL CONDUCTIVITY OF 0.25 AT MEAN TEMPERATURE OF 75 DEGREES F.
3. ALL SUPPLY AND RETURN SHEET METAL SUPPLY AIR DUCTWORK WITHIN 25' OF AN AIR HANDLER SHALL BE LINED WITH ONE (1") THICK FIBERGLASS SPIRAL DUCT THERMAL/ACOUSTIC LINING HAVING A CONDUCTIVITY OF .23 AND R-VALUE OF 4.3 AT MEAN TEMPERATURE OF 75°F. INSULATION SHALL BE JOHNS-MANVILLE "SPIRACOUSTIC PLUS" OR APPROVED EQUAL.
4. INSULATION MUST BE FIRE RATED FOR FLAME SPREAD OF 25 OR LESS AND SMOKE DEVELOPED FOR 50 OR LESS.
5. ALL INSULATION SHALL BE APPLIED IN ACCORDANCE WITH MANUFACTURER'S RECOMMENDATIONS.
6. EXHAUST DUCTWORK SHALL BE UNINSULATED EXCEPT BETWEEN BACKDRAFT DAMPER AND ROOF CURB. EXHAUST DUCTWORK BETWEEN BACKDRAFT DAMPER AND CURB SHALL BE WRAPPED WITH 1-1/2" THICK FIBERGLASS DUCT INSULATION HAVING A CONDUCTIVITY OF .26 AT MEAN TEMPERATURE OF 75 DEGREES F. AND A DENSITY OF 1.5 PCF. INSULATION SHALL BE SCHULLER "MICROLITE" OR APPROVED EQUAL.
7. OUTSIDE AIR DUCTWORK BETWEEN THE POINT OF CONNECTION TO RETURN AIR DUCTWORK OR RETURN AIR PLENUM AND OUTSIDE AIR INTAKE LOUVER SHALL BE WRAPPED WITH 1-1/2" THICK FIBERGLASS DUCT INSULATION HAVING A CONDUCTIVITY OF .26 AT MEAN TEMPERATURE OF 75 DEGREES F. AND A DENSITY OF 1.5 PCF. INSULATION SHALL BE SCHULLER "MICROLITE" OR APPROVED EQUAL.
8. "CONCEALED" DUCTS SHALL BE INSULATED WITH DUCT WRAP AS FOLLOWS:

OUTSIDE AIR DUCTS	2" THICK
RIGID ROUND DUCTS	1-1/2" THICK
ALL RECTANGULAR SUPPLY AND RETURN DUCTS	1-1/2" THICK

<u>NATURAL GAS PIPING</u>

1. GAS PIPING SHALL BE SIZED & INSTALLED AS PER 2018 INTERNATIONAL FUEL GAS CODE (IFGC) CHAPTER 4.
2. GAS PIPING 2" & SMALLER SHALL BE ASTM A53 SCH 40 BLACK STEEL PIPE WITH THREADED JOINTS IN ACCORDANCE WITH ANSI/ASME B1.20.1 THREAD JOINT COMPOUND SHALL BE RESISTANT TO THE ACTION OF NATURAL GAS. FITTINGS MAY BE OF THE "COLD PRESS' SYSTEM SIMILAR TO VIEGA MEGAPRESS-G FITTINGS SYSTEM. GAS PIPING 2-1/2" & LARGER SHALL BE ASTM A53 SCH 40 BLAC STEEL PIPE WITH WELDED JOINTS IN ACCORDANCE WITH AWS B2.1, OR FLANGED JOINTS IN ACCORDANCE WITH ASTM B16.1. EXTERIOR ABOVE GROUND PIPING 2" & SMALLER SHALL BE GALVANIZED. EXTERIOR ABOVE GROUND PIPING 2-1/2" & LARGER SHALL BE PAINTED. ALL PIPING TO BE IDENTIFIED IN ACCORDANCE WITH ASME A13.2 EXTERIOR UNDERGROUND PIPE AND FITTINGS SHALL BE PLASTIC IN ACCORDANCE WITH ASTM D2513 PIPING SHALL BE MARKED "GAS ASTM D2513". EXTERIOR UNDERGROUND PIPING SHALL HAVE A BURY DEPTH OF 18" MIN. AN ELECTRICALLY CONTINUOUS CORROSION RESISTANT WIRE (MIN AWG 14) SHALL BE BURIED WITH THE PLASTIC PIPE TO FACILITATE LOCATING.
3. GAS PIPING SHALL BE SUPPORTED IN ACCORDANCE WITH IFGC 2018 SECTION 407 & ANSI/MSS SP-58. HANGER SPACING SHALL BE IN ACCORDANCE WITH IFGC 2019 SECTION 415.
4. DRIP LEGS SHALL BE INSTALLED AT ANY POINT WHERE CONDENSATE COULD COLLECT AND AS REQUIRED BY AUTHORITY HAVING JURISDICTION. PIPING SHALL BE SLOPED NOT LESS THAN 1/4" IN 15 FEET TO PREVENT TRAPS.
5. PRIOR TO ACCEPTANCE & INITIAL OPERATION, ALL PIPING SHALL BE INSPECTED AND TESTED TO DETERMINE THAT THE INSTALLATION COMPLIES WITH THE REQUIREMENTS OF IFGC 2018 SECTION 406.
6. GAS SHUT OFF VALVES 1" & SMALLER SHALL BE APOLLO VALVE SERIES GB-10 GAS BALL VALVE. VALVES 1 1/4" TO 2 1/2" SHALL BE APOLLO VALVE SERIES 50 GAS COCK. VALVES 3" & LARGER SHALL BE APOLLO VALVE SERIES 88L-200 FULL PORT FLANGED BALL VALVE. VALVES SHALL NOT BE INSTALLED IN CONCEALED ABOVE CEILING LOCATIONS. VALVES SHALL CONFORM TO IFGC 2018 SECTION 409.
7. GAS PRESSURE REGULATORS SHALL BE MAXITROL SERIES RV, R, RS, OR 325 AS REQUIRED AND AS RECOMMENDED BY GAS APPLIANCE MANUFACTURERS. ALL REGULATORS SHALL BE PROPERLY VENTED OR PROVIDED WITH LABELED & APPROVED VENT LIMITING DEVICES IN ACCORDANCE WITH IFGC 2018 SECTION 410.
8. GAS SUPPORTS FOR PIPING ON ROOF SHALL BE PILLOW BLOCK PIPE STANDS WITH ROLLER BEARING AND PIPE STRAP, MIRO INDUSTRIES MODEL 3-R FOR 3" & SMALLER, MODEL 4-R FOR 4" & 5-R FOR 5" & 6" AS DISTRIBUTED BY INDUSTRIAL COMBUSTION ASSOCIATES. PIPE SUPPORT SPACING SHALL NOT EXCEED REQUIREMENTS OF IFGC 2018 SECTION 415.

SOSH
– atlantic city, NJ –
philadelphia, PA –

CONCORD ENGINEERING
www.concord-engineering.com
2311 Atlantic Avenue
Atlantic City, New Jersey 08401
(609) 272-9620

Anthony H. Caucci
Professional Engineer
New Jersey Lic. # 44806

ATLANTIC COUNTY VOTING MACHINE WAREHOUSE ALTERATION

235 DOLPHIN AVENUE
NORTHFIELD, NJ 08225

SUBMISSIONS

NO.	DATE:	DESCRIPTION:
	05/20/2022	CONSTRUCTION DOCUMENTS

DRAWING TITLE:
MECHANICAL COVERSHEET, ABBREVIATIONS, & SYMBOLS

DRAWN BY: KB
REVIEWED BY: AHC
PROJECT NO. 22013.00.001
DRAWING NO. M-000

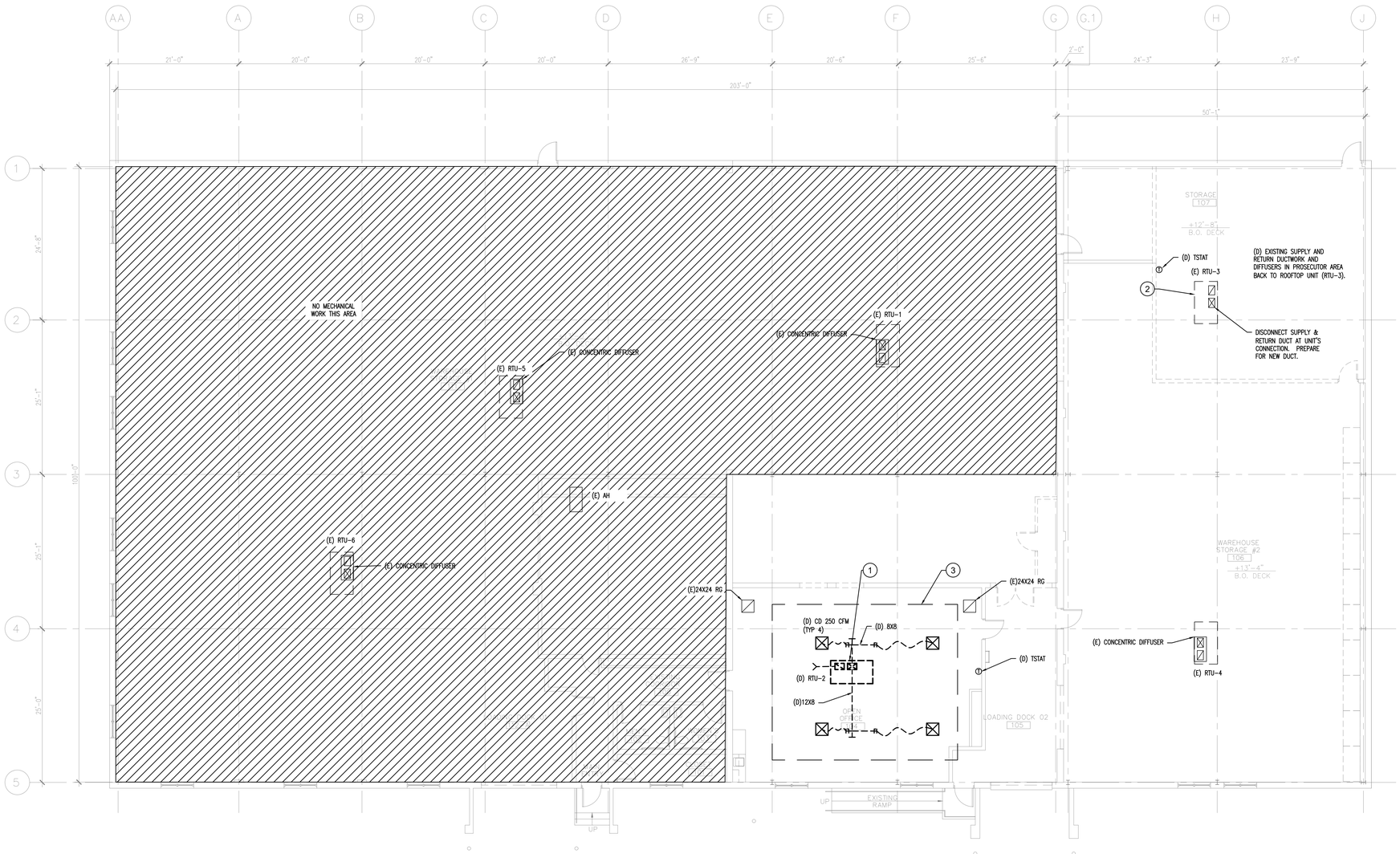

1 / M-1 MECHANICAL DEMO FLOOR PLAN

SCALE: 1/8" = 1'

DEMOLITION OF EXISTING SYSTEM NOTES:

1. GENERAL NOTES:

A. REFER TO MECHANICAL LEAD SHEET, M-0 FOR "NOTES" THAT PERTAIN TO THE SCOPE OF THIS PROJECT.

B. CONTRACTOR SHALL COORDINATE THE REMOVAL OF MECHANICAL EQUIPMENT WITH OTHER TRADES SO AS NOT TO AFFECT THE OPERATION OF EXISTING SYSTEMS. PARTICULAR ATTENTION SHALL BE GIVEN TO UTILITY SERVICES, ELECTRIC, WATER AND BUILDING UTILITIES.

C. CONTRACTOR SHALL VERIFY LOCATION OF EXISTING EQUIPMENT, EXISTING GAS PIPE SIZE & ROUTING AND ALL VALVES AND SPECIALTIES ASSOCIATED WITH THE EXISTING SYSTEM BEFORE INITIALIZING DEMOLITION.

D. COORDINATE EXISTING ROOFING SYSTEMS AND WARRANTIES WITH OWNER. COORDINATE ALL ROOFING WORK WITH OWNER.

2. SCOPE OF WORK DEMOLITION NOTES:

1. REMOVE EXISTING ROOFTOP UNIT, DISCONNECT GAS PIPE. EXISTING DUCT SUPPORTS SHALL REMAIN WHERE INDICATED ON PLANS. EXISTING CURB TO REMAIN AND BE REUSED PREPARE CURB FOR NEW UNIT. REMOVE EXISTING ELECTRICAL POWER; DISCONNECT SWITCHES, STARTERS AND ETC. ASSOCIATED WITH EQUIPMENT MENTIONED ABOVE. REMOVE EXISTING DUCT CONNECTED TO THE ROOFTOP UNIT BEING DEMOLISHED TO A POINT WHERE INDICATED ON PLANS.

2. EXISTING RTU ON ROOF TO REMAIN AND BE REUSED. PROVIDE NEW THERMOSTAT SEE NEW WORK PLANS.

3. CONTRACTOR TO REMOVE AND REINSTALL EXISTING CEILING GRID, TILES, LIGHTING, ETC. AS REQUIRED TO REMOVE AND REPLACE THE DUCTWORK ABOVE THE CEILING. REPLACE ANY DAMAGED TILES, GRID, OR LIGHTING.

SOSH
atlantic city, NJ
philadelphia, PA

CONCORD ENGINEERING
www.concord-engineering.com
2311 Atlantic Avenue
Atlantic City, New Jersey 08401
(609) 272-9620

Anthony H. Caucci
Professional Engineer
New Jersey Lic. # 44806

ATLANTIC COUNTY VOTING MACHINE WAREHOUSE ALTERATION

235 DOLPHIN AVENUE
NORTHFIELD, NJ 08225

SUBMISSIONS

NO.	DATE:	DESCRIPTION:
	05/20/2022	CONSTRUCTION DOCUMENTS

DRAWING TITLE:
MECHANICAL DEMOLITION FLOOR PLAN

DRAWN BY: KB
REVIEWED BY: AHC
PROJECT NO. 22013.00.001
DRAWING NO. M-100

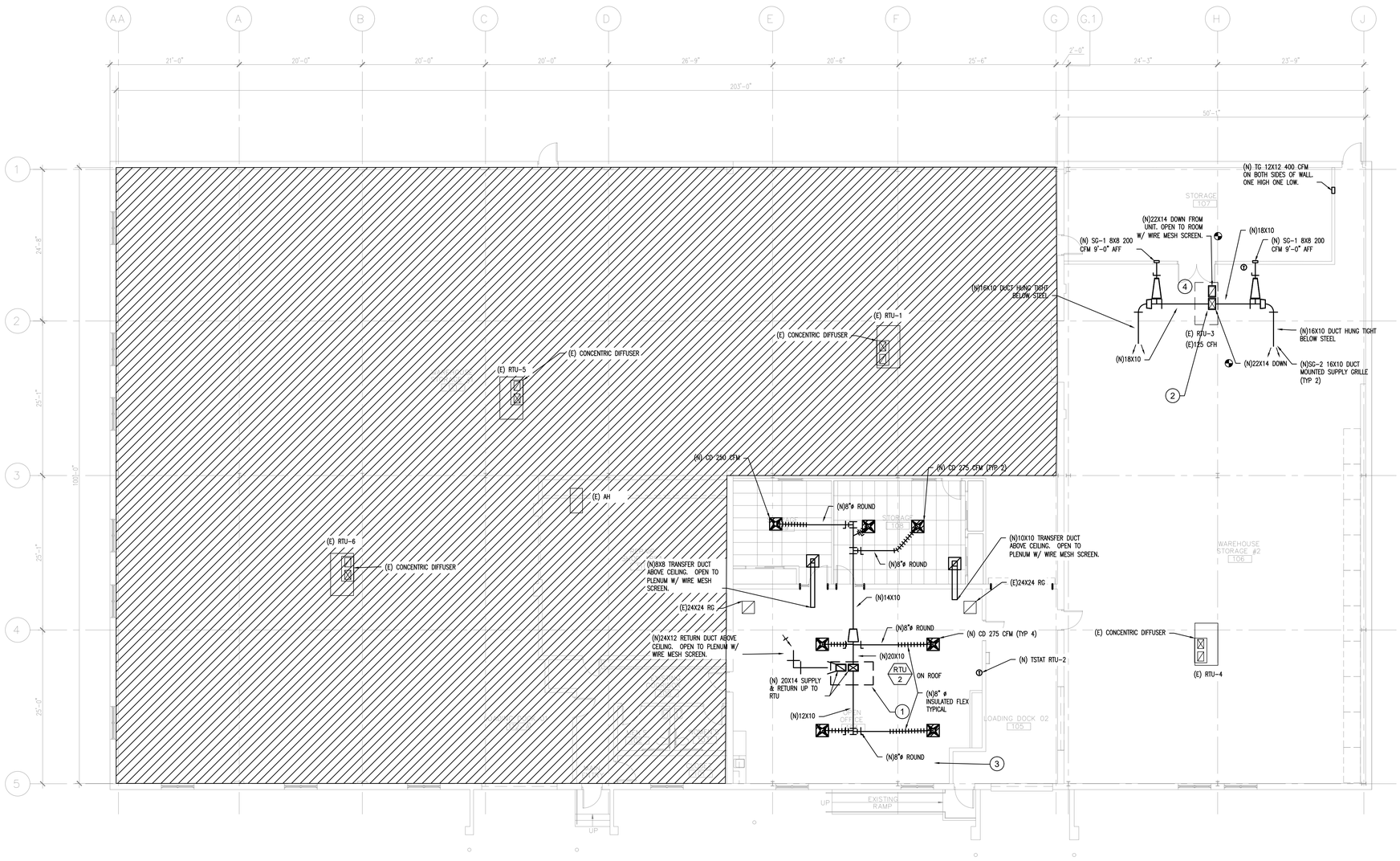

1 M-2 MECHANICAL NEW WORK FLOOR PLAN

SCALE: 1/8" = 1'

NEW WORK SYSTEM NOTES:

1. GENERAL NOTES:

A. REFER TO MECHANICAL LEAD SHEET, M-0 FOR "NOTES" THAT PERTAIN TO THE SCOPE OF THIS PROJECT.

B. CONTRACTOR SHALL COORDINATE THE INSTALLATION OF NEW MECHANICAL EQUIPMENT WITH OTHER TRADES SO AS NOT TO AFFECT THE OPERATION OF EXISTING SYSTEMS. PARTICULAR ATTENTION SHALL BE GIVEN TO UTILITY SERVICES, ELECTRIC, WATER AND BUILDING UTILITIES

C. MC SHALL BE RESPONSIBLE TO COORDINATE LOCATION OF NEW ROOFTOP UNIT CRANE RIGGING AND INSTALLATION WITH OWNER. ALL CRANE RIGGING, ROAD CLOSURES, PERMITS ETC SHALL BE THE RESPONSIBILITY OF THE MC. CONTRACTOR SHALL SUBMIT A LIFT PLAN TO OWNER FOR REVIEW AND APPROVAL PRIOR TO COMMENCING ANY LIFT ACTIVITIES.

C. REFER TO OWNER FOR ROOF WARRANTIES AND SPECIAL REQUIREMENTS. COORDINATE ALL ROOFING WORK WITH THE OWNER.

2. SCOPE OF NEW WORK NOTES:

(1) INSTALL NEW PACKAGED ROOFTOP UNIT ON EXISTING CURB WITH NEW ADAPTER CURB (IF REQUIRED). PROVIDE NEW THERMOSTAT AND DUCTWORK AS SHOWN. CONNECT ELECTRICAL POWER AND NATURAL GAS PER MANUFACTURER. EXISTING GAS LINE ON ROOF TO BE REUSED AND CONNECTED TO UNIT FULL SIZE OF EXISTING PIPE. PROVIDE NEW GAS REGULATOR AND SHUT-OFF VALVE. PROVIDE CONDENSATE TRAP AND EXTEND DRAIN 36" AWAY FROM UNIT WITH NEOPRENE PAD UNDER DISCHARGE.

(2) PROVIDE NEW DUCT, DUCT TRANSITION ETC., INSTALLED ON THE ROOF, FROM THE NEW ROOFTOP UNIT AND CONNECT TO EXISTING DUCT AT A POINT WHERE INDICATED ON PLANS. PROVIDE NEW DUCT SUPPORTS WHERE REQUIRED TO INSTALL NEW DUCTWORK. SEAL DUCT SUPPORTS WEATHERTIGHT.

(3) CONTRACTOR TO REMOVE AND REINSTALL EXISTING CEILING GRID, TILES, LIGHTING, ETC. AS REQUIRED TO REMOVE AND REPLACE THE DUCTWORK ABOVE THE CEILING. REPLACE ANY DAMAGED TILES, GRID OR LIGHTING.

(4) PERFORM THE FOLLOWING ON THE EXISTING PACKAGED ROOFTOP UNIT:
1. REPLACE FILTERS.
2. CLEAN COOLING COIL & FURNACE.
3. REBALANCE FAN TO AIRFLOW INDICATED ON PLANS.

SOSH
atlantic city, NJ
philadelphia, PA

CONCORD ENGINEERING
www.concord-engineering.com
2311 Atlantic Avenue
Atlantic City, New Jersey 08401
(609) 272-9620

Anthony H. Caucci
Professional Engineer
New Jersey Lic. # 44806

ATLANTIC COUNTY VOTING MACHINE WAREHOUSE ALTERATION

235 DOLPHIN AVENUE
NORTHFIELD, NJ 08225

SUBMISSIONS

NO.	DATE:	DESCRIPTION:
	05/20/2022	CONSTRUCTION DOCUMENTS

DRAWING TITLE:
MECHANICAL NEW WORK FLOOR PLAN

DRAWN BY: KB
REVIEWED BY: AHC
PROJECT NO. 22013.00.001
DRAWING NO. M-200

ROOFTOP AIR HANDLING UNIT SCHEDULE

TAG	MFR.	MODEL NO.	NOMINAL TONS	SERVING	CODE REQUIRED O.A. (CFM)	SUPPLY AIR FAN						COOLING CAPACITY							HEATING CAPACITY					UNIT POWER SUPPLY			UNIT WEIGHT (LBS)	NOTES
						CFM	E.S.P. (IN H_2O)	RPM	NOM. HP	BHP	DRIVE	GROSS TOTAL (MBH)	GROSS SENS. (MBH)	E.A.T. (°F)		L.A.T. (°F)		EER	NAT. GAS INPUT (MBH)	OUTPUT (MBH)	AFU %	E.A.T (°F)	L.A.T. (°F)	VOLTAGE (V/PH/HZ)	TOTAL UNIT MCA	MAX. FUSE SIZE		
														DB	WB	DB	WB											
RTU-2	York	ZE060H10A1C1AF1A	5	OFFICE AREA	250	1,900	0.8	1120	1	1.0	DIRECT	60	44	95.0	67.0	58.6	57.0	11.8	100	80	80	60.0	99.0	208/1/60	43	60	747	ALL

PROVIDE UNIT WITH :

1 SINGLE POINT ELECTRICAL CONNECTION WITH INTEGRAL MAIN DISCONNECT SWITCH
2 FACTORY TRAINED REPRESENTATIVE FOR OPERATION & MAINTENANCE TRAINING ON SITE.
3 DIFFERENTIAL ENTHALPY ECONOMIZER WITH BAROMETRIC RELIEF
5 GALVANIZED STEEL HEAT EXCHANGER.
6 CONVENIENCE RECEPTACLE.
7 E-COAT CONDENSER AND EVAPORATOR COILS.
8 ELECTRONIC EXPANSION VALVES.
9 UNIT MOUNTED RETURN AIR SMOKE DETECTOR.
10 STAINLESS STEEL DRAIN PAN
11 PROVIDE 7-DAY PROGRAMMABLE THERMOSTAT.
12 1 YEAR PARTS AND LABOR, 5 YEAR COMPRESSOR PARTS AND LABOR, 10 YEAR HEAT EXCHANGER PARTS
13 ROOF CURB / ADAPTER CURB AS REQUIRED.
14 2" PLEATED MERV 8 FILTERS
15 GAS PIPING KIT

SCHEDULE OF AIR DEVICES

CD-1	CEILING DIFFUSER EQUAL TO KRUEGER MODEL SSH, ALUMINUM, FIXED DISCHARGE WITH ADJUSTABLE 1, 2, 3 OR 4-WAY THROW. BORDER TYPE SHALL BE LAY-IN OR SURFACE MOUNT AS REQUIRED. ACTIVE DIFFUSER FACE AREA SHALL BE MAXIMUM AVAILABLE. PROVIDE MANUFACTURER'S ALUMINUM OPPOSED BLADE LEVER OPERATED DAMPER AND ROUND NECK ADAPTOR PER SIZES SHOWN ON PLAN. FINISH SHALL BE BAKED ACRYLIC PAINT, COLOR AS SELECTED BY ARCH. DIFFUSER FACE SIZE SHALL BE 24X24 UNLESS OTHERWISE NOTED. NECK SIZE TO BE DETERMINED BY MANUFACTURER FOR AN NC LEVEL LESS THAN 30.
SG-1	DOUBLE DEFLECTION CEILING/SIDEWALL SUPPLY GRILLE EQUAL TO KRUEGER MODEL 5880H, ALUMINUM WITH 1-1/4" BORDER ON ALL SIDES AND A MINIMUM BORDER THICKNESS OF 0.040 INCHES. GRILLE SHALL HAVE 3/4" BLADE SPACING. BORDER TYPE AS REQUIRED. PROVIDE WITH ALUMINUM OPPOSED BLADE DAMPER. FINISH SHALL BE BAKED ON ACRYLIC COLOR AS SELECTED BY ARCHITECT. NECK SIZE AS SHOWN ON DRAWINGS.
SG-2	DUCT MOUNTED SUPPLY GRILLE EQUAL TO KRUEGER MODEL 5DMGDU, ALUMINUM WITH INDIVIDUALLY ADJUSTABLE BLADES ON 3/4" CENTERS. GASKETED GRILLE FRAME TO MINIMIZE AIR LEAKAGE. GRILLE SHALL BE FIXED 45° DEFLECTION WITH 3/4" BLADE SPACING. FRONT BLADES PARALLEL TO LONG DIMENSION. BORDER TYPE AS REQUIRED. PROVIDE WITH OPPOSED BLADE DAMPER. FINISH SHALL BE BAKED ON ACRYLIC PAINT, COLOR AS SELECTED BY ARCHITECT. NECK SIZE AS SHOWN ON DRAWINGS.
TG-1	CEILING/SIDEWALL TRANSFER GRILLE EQUAL TO KRUEGER MODEL S585H, ALUMINUM WITH 1-1/4" BORDER ON ALL SIDES AND A MINIMUM BORDER THICKNESS OF 0.040 INCHES. GRILLE SHALL BE FIXED 45° DEFLECTION WITH 1/2" BLADE SPACING. FRONT BLADES PARALLEL TO LONG DIMENSION. BORDER TYPE AS REQUIRED. PROVIDE WITH ALUMINUM OPPOSED BLADE DAMPER. FINISH SHALL BE BAKED ON ACRYLIC PAINT, COLOR AS SELECTED BY ARCHITECT. NECK SIZE AS SHOWN ON DRAWINGS.

VENTILATION RATE SCHEDULE

ROOM NAME	AREA (FT^2)	NO. OF OCCUP. OR FIXTURES	MECHANICAL CODE REQUIRED VENTILATION RATE						DESIGN		
			AREA OUTDOOR AIR FLOWRATE (CFM/FT^2)	AREA O.A. REQ'D (CFM)	PEOPLE/FIXTURE OUTDOOR AIR FLOWRATE	PEOPLE O.A. REQ'D (CFM)	AIR DISTR. EFFECT.	TOTAL O.A. REQ'D (CFM)	TOTAL DESIGN O.A. (CFM)	TOTAL DESIGN AIR (CFM)	EXHAUST AIR (CFM)
RTU-2											
104 - OPEN OFFICE	1,250	6	0.06	75	5	30	1	105	105	1,100	
108 - STORAGE	405	20	0.06	25	5	100	1	125	125	550	
109 - STORAGE	270	1	0.06	15	5	5	1	20	20	250	
	1,925	28						250	250	1,900	

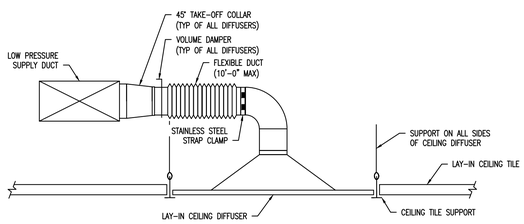

1 M-3 FLEXIBLE BRANCH DUCT DETAIL
SCALE: N.T.S.

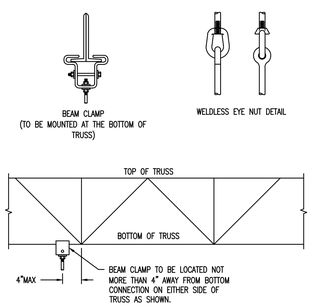

3 M-3 ACCEPTABLE ATTACHMENT TO STRUCTURAL DETAIL
SCALE: N.T.S.

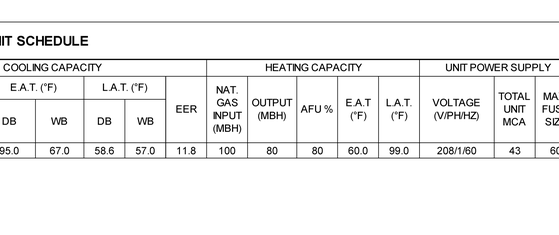

5 M-3 CONDENSATE DRAIN PIPE ROOF MOUNTED UNIT DETAIL
SCALE: N.T.S.

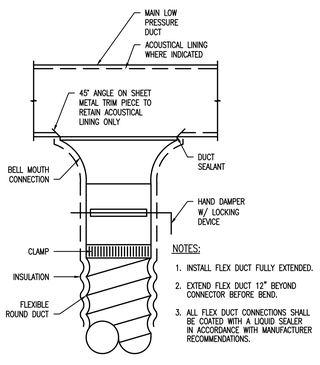

2 M-3 TYPICAL LOW PRESSURE ROUND DUCT TAKE-OFF DETAIL
SCALE: N.T.S.

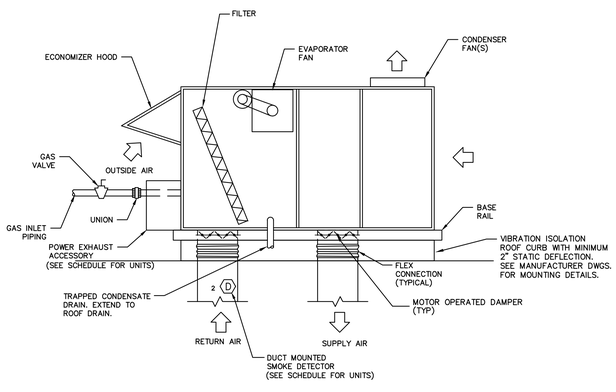

4 M-3 TYPICAL ROOFTOP UNIT DETAIL
SCALE: N.T.S.

SOSH
atlantic city, NJ
philadelphia, PA

CONCORD ENGINEERING
www.concord-engineering.com
2311 Atlantic Avenue
Atlantic City, New Jersey 08401
(609) 272-9620

Anthony H. Caucci
Professional Engineer
New Jersey Lic. # 44806

ATLANTIC COUNTY VOTING MACHINE WAREHOUSE ALTERATION

235 DOLPHIN AVENUE
NORTHFIELD, NJ 08225

SUBMISSIONS

NO.	DATE:	DESCRIPTION:
	05/20/2022	CONSTRUCTION DOCUMENTS

DRAWING TITLE:
MECHANICAL SCHEDULE NOTES & DETAILS

DRAWN BY: KB
REVIEWED BY: AHC
PROJECT NO. 22013.00.001
DRAWING NO. M-300

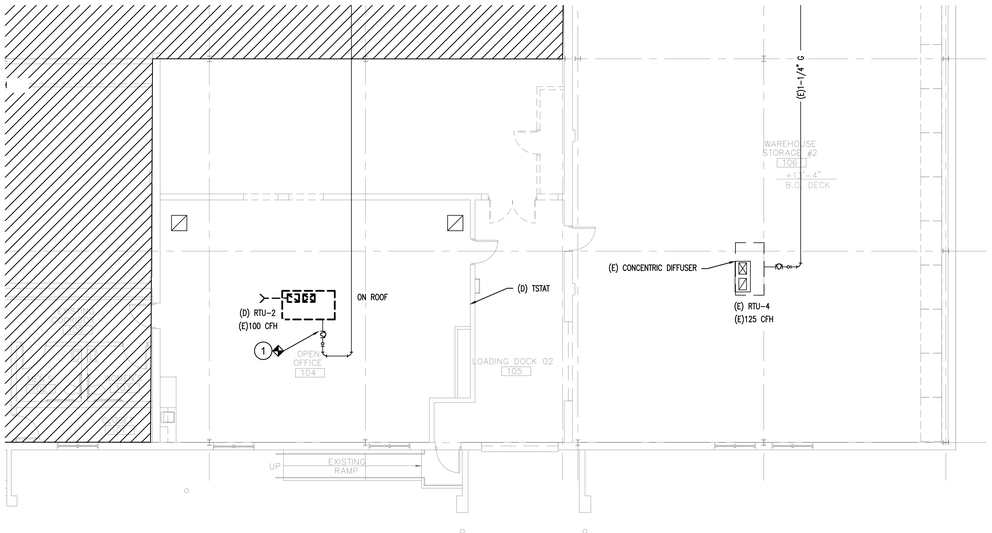

1 MP-1 PLUMBING GAS DEMO PARTIAL FLOOR PLAN
SCALE: 1/8" = 1'

DEMOLITION OF EXISTING SYSTEM NOTES:

1. GENERAL NOTES:

A. REFER TO MECHANICAL LEAD SHEET, M-0 FOR "NOTES" THAT PERTAIN TO THE SCOPE OF THIS PROJECT.

B. CONTRACTOR SHALL COORDINATE THE REMOVAL OF MECHANICAL EQUIPMENT WITH OTHER TRADES SO AS NOT TO AFFECT THE OPERATION OF EXISTING SYSTEMS. PARTICULAR ATTENTION SHALL BE GIVEN TO UTILITY SERVICES, ELECTRIC, WATER AND BUILDING UTILITIES.

C. CONTRACTOR SHALL VERIFY LOCATION OF EXISTING EQUIPMENT, EXISTING GAS PIPE SIZE & ROUTING AND ALL VALVES AND SPECIALTIES ASSOCIATED WITH THE EXISTING SYSTEM BEFORE INITIALIZING DEMOLITION.

2. SCOPE OF WORK DEMOLITION NOTES:

1 REMOVE EXISTING ROOFTOP UNIT, DISCONNECT GAS PIPE AND REMOVE PIPE BACK TO GAS SHUTOFF VALVE AT UNIT.

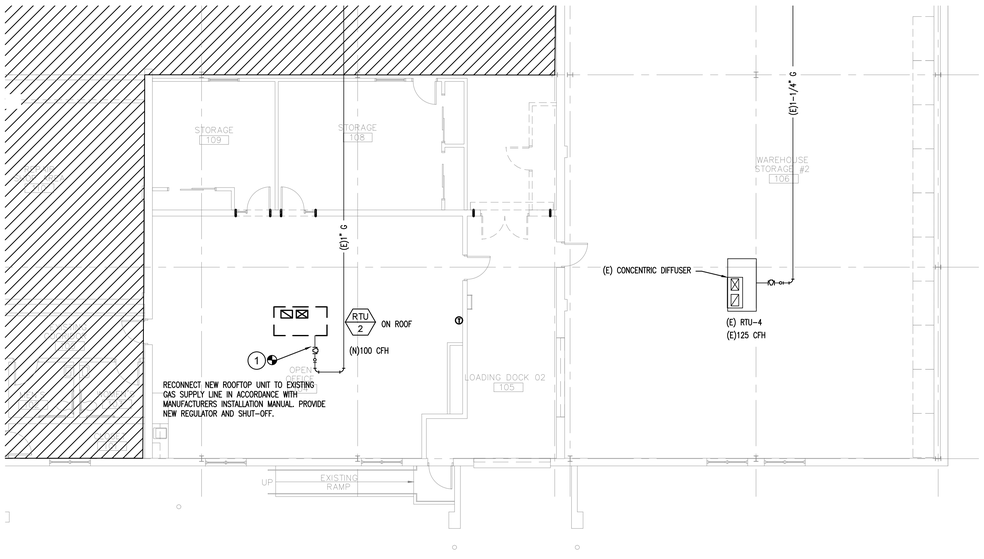

2 MP-1 PLUMBING GAS NEW WORK PARTIAL FLOOR PLAN
SCALE: 1/8" = 1'

NEW WORK SYSTEM NOTES:

1. GENERAL NOTES:

A. REFER TO MECHANICAL LEAD SHEET, M-0 FOR "NOTES" THAT PERTAIN TO THE SCOPE OF THIS PROJECT.

B. CONTRACTOR SHALL COORDINATE THE INSTALLATION OF NEW MECHANICAL EQUIPMENT WITH OTHER TRADES SO AS NOT TO AFFECT THE OPERATION OF EXISTING SYSTEMS. PARTICULAR ATTENTION SHALL BE GIVEN TO UTILITY SERVICES, ELECTRIC, WATER AND BUILDING UTILITIES

2. SCOPE OF NEW WORK NOTES:

1 PROVIDE NEW ROOFTOP MANUFACTURER GAS CONNECTION KIT. CONNECT NEW GAS PIPE FROM UNIT TO EXISTING GAS SHUTOFF VALVE OR PREVIOUS UNIT. INSTALL GAS PIPE PER MANUFACTURER'S INSTALLATION MANUAL.

SOSH
atlantic city, NJ
philadelphia, PA

CONCORD ENGINEERING
www.concord-engineering.com
2311 Atlantic Avenue
Atlantic City, New Jersey 08401
(609) 272-9620

Anthony H. Caucci
Professional Engineer
New Jersey Lic. # 44806

ATLANTIC COUNTY VOTING MACHINE WAREHOUSE ALTERATION

235 DOLPHIN AVENUE
NORTHFIELD, NJ 08225

SUBMISSIONS

NO.	DATE:	DESCRIPTION:
	05/20/2022	CONSTRUCTION DOCUMENTS

DRAWING TITLE:
MECHANICAL & PLUMBING GAS DEMO & NEW WORK PLAN

DRAWN BY: KB
REVIEWED BY: AHC
PROJECT NO. 22013.00.001
DRAWING NO. MP-100

ELECTRICAL SHEET SPECIFICATIONS

GENERAL NOTES

A. CONTRACT PERFORMANCE

1. ALL ELECTRICAL WORK SHALL BE INSTALLED IN ACCORDANCE WITH THE 2017 NATIONAL ELECTRIC CODE AS ADOPTED BY THE UNIFORM CONSTRUCTION CODE - STATE OF NEW JERSEY AND ANY OTHER PARTY HAVING JURISDICTION.

2. EXECUTE THE WORK IN THE BEST AND MOST THOROUGH MANNER & TO THE SATISFACTION OF THE CONSULTING ENGINEERS, WHO WILL JOINTLY INTERPRET THE MEANING OF THE DRAWINGS AND SPECIFICATIONS AND SHALL HAVE THE POWER TO REJECT ANY WORK AND MATERIALS WHICH, IN THEIR JUDGMENT, ARE NOT IN FULL ACCORDANCE THEREWITH.

3. EXCEPT FOR CHANGES AS MAYBE SPECIFICALLY APPROVED BY THE CONSULTING ENGINEERS, IN ACCORDANCE WITH ALTERNATES OF OPTIONS STATED HEREINAFTER, ALL WORK MUST BE IN FULL ACCORDANCE WITH THE INTENT OF THE PLANS AND SPECIFICATIONS, COMPLETE IN EVERY WAY AND READY FOR SATISFACTORY AND EFFICIENT OPERATION WHEN DELIVERED TO THE OWNER.

4. WHERE DISAGREEMENTS OCCUR BETWEEN THE PLANS AND THE SPECIFICATIONS, OR WITHIN EITHER DOCUMENT ITSELF, THE ITEM OR ARRANGEMENT OF BETTER QUALITY, GREATER QUANTITY OR HIGHER COST SHALL BE INCLUDED IN THE BASE BID.

5. THE DRAWINGS SHOW VARIOUS CONDUIT AND PIPING SYSTEMS SCHEMATICALLY. CONTRACTOR SHALL FURNISH AND INSTALL ALL NECESSARY JUNCTION BOXES, PULL BOXES, SUPPORT AND ACCESSORIES TO MEET APPLICABLE CODES, BUILDING STANDARDS AND FULFILL CONTRACT DOCUMENTS. NO ADDED COMPENSATION WILL BE PERMITTED FOR VARIATIONS DUE TO FIELD CONDITIONS.

6. THE CONTRACTOR COVENANTS AND AGREES THAT HE AND HIS SUBCONTRACTORS AND HIS AND THEIR AGENTS, SERVANTS AND EMPLOYEES WILL PROVIDE AND MAINTAIN A SAFE PLACE TO WORK AND THAT HE AND THEY WILL COMPLY WITH ALL LAWS AND REGULATIONS OF ANY GOVERNMENTAL AUTHORITY HAVING JURISDICTION THEREOF AND THE CONTRACTOR AGREES TO INDEMNITY, DEFEND AND HOLD HARMLESS THE CONSULTING ENGINEER, ARCHITECT AND OWNER FROM AND AGAINST ANY LIABILITY, LOSS, DAMAGE OR EXPENSE, INCLUDING ATTORNEY'S FEES ARISING FROM FAILURE OR ALLEGED FAILURE ON THE PART OF THE CONTRACTOR, HIS SUBCONTRACTORS AND HIS AND THEIR AGENTS, SERVANTS AND EMPLOYEES TO PROVIDE AND MAINTAIN A SAFE PLACE TO WORK OR TO COMPLY WITH ALL LAWS AND REGULATIONS OF ANY GOVERNMENTAL AUTHORITY HAVING JURISDICTION THEREOF.

7. THE CONTRACTOR AND EACH SUBCONTRACTOR COVENANTS AND AGREES TO INDEMNITY, DEFEND AND HOLD HARMLESS THE CONSULTING ENGINEER, ARCHITECT AND OWNER FROM AND AGAINST ANY LIABILITY, LOSS, DAMAGE OR EXPENSE, INCLUDING ATTORNEY'S FREES ARISING FROM A FAILURE OR ALLEGED FAILURE ON THE PART OF THE CONTRACTOR, HIS SUBCONTRACTORS AND HIS AND THEIR AGENTS, SERVANTS AND EMPLOYEES PROPERLY TO DISCHARGE THE OBLIGATIONS ASSUMED BY HIM OR THEM IN THE PERFORMANCE OF THE WORK, INCLUDING ANY ACT OR OMISSION ALLEGEDLY RESULTING IN DEATH OR PERSONAL INJURY OR PROPERTY DAMAGE OR IMPROPER CONSTRUCTION, CONSTRUCTION TECHNIQUES OR THE USE OF IMPROPER OR INAPPROPRIATE MATERIAL OR TOOLS.

8. THE CONTRACTOR AGREES THAT ANY CONTROVERSY OR DISPUTE TO WHICH THE CONTRACTOR, THE ARCHITECT, AND THE CONSULTING ENGINEERS ARE PARTIES SHALL BE SUBMITTED TO ARBITRATION FOR DECISION IN ACCORDANCE WITH THE RULES OF SUCH ASSOCIATION FOR CONSTRUCTION INDUSTRY DISPUTES. ALL SUBCONTRACTORS LIKEWISE AGREE TO SUBMIT TO SUCH ARBITRATION ANY DISPUTE BETWEEN OR AMONG THEM, THE CONTRACTOR, THE ARCHITECT AND THE CONSULTING ENGINEERS, AND THE CONTRACTOR AGREES TO MAKE AVAILABLE TO THE CONSULTING ENGINEERS ON DEMAND SIGNED COPIES OF THE CONTRACT BETWEEN THE OWNER AND THE CONTRACTOR AND BETWEEN THE CONTRACTOR AND HIS SUBCONTRACTORS. THE CONTRACTOR AND EACH SUBCONTRACTOR AGREE THAT BY SUBMITTING A BID WHICH IS ACCEPTED, THIS PARAGRAPH SHALL BE DEEMED A WRITTEN AGREEMENT TO SUBMIT ANY CONTROVERSY THEREAFTER ARISING ARBITRATION.

9. ALL WORK SHALL BE DONE IN CONFORMANCE WITH ALL GOVERNING CODES, INCLUDING AMENDMENTS, BULLETINS, ETC., AS WELL AS STANDARDS OF INSTALLATION AND EQUIPMENT ESTABLISHED FOR THE BUILDINGS, AND REQUIREMENTS OF THE OWNER.

10. OBTAIN ALL NECESSARY PERMITS AND APPROVAL FROM GOVERNING AUTHORITIES AND FILE ALL NECESSARY FORMS. PAY ALL INSPECTION FEES.

11. COORDINATE SCHEDULING OF ALL WORK TO BE PERFORMED WITH OWNER AND/OR HIS AGENT AND INCLUDE ALL NECESSARY PREMIUM TIME REQUIRED FOR SHUTDOWNS, WORK IN OCCUPIED AREAS, ETC.

12. ALL AREAS ASSOCIATED WITH WORK TO BE PERFORMED SHALL BE EXAMINED PRIOR TO BID SUBMISSION. NO ADDITIONAL COMPENSATION SHALL BE MADE FOR CONDITIONS FOUND DURING INSTALLATION.

13. BEFORE COMMENCING WORK, EXAMINE ALL ADJOINING WORK ON WHICH THIS WORK IS IN ANY WAY DEPENDENT FOR PERFECT WORKMANSHIP ACCORDING TO THE INTENT OF THIS SPECIFICATION, AND REPORT TO THE CONSTRUCTION MANAGER ANY CONDITION WHICH PREVENTS PERFORMANCE OF FIRST-CLASS WORK, NO "WAIVER OF RESPONSIBILITY" FOR INCOMPLETE, INADEQUATE OR DEFECTIVE ADJOINING WORK WILL BE CONSIDERED UNLESS NOTICE HAS BEEN FILED BEFORE SUBMITTAL OF A PROPOSAL.

14. COORDINATE ALL WORK WITH OTHER TRADES TO ENSURE INSTALLATION IS MADE IN ACCORDANCE WITH THE CONTRACT DOCUMENTS.

15. INCLUDE ALL LABOR, MATERIALS, AND APPURTENANCES REQUIRED FOR THE FURNISHING, INSTALLING AND TESTING OF ALL WORK, COMPLETE AND MAKE READY FOR OPERATION IN A MANNER SATISFACTORY TO THE ARCHITECT AND CONSULTING ENGINEER, ALL WORK SHOWN ON DRAWINGS AND SPECIFIED HEREIN.

16. ALL WORK SHALL BE GUARANTEED FOR TWO (1) FULL YEAR FROM THE DATE WHEN THE OWNER HAS ISSUED A "CERTIFICATE OF SUBSTANTIAL COMPLETION".

B. INSTALLATION PROCEDURE

1. THIS CONTRACTOR'S WORK SHALL INCLUDE, BUT NOT BE LIMITED TO THE FOLLOWING: FURNISHING AND INSTALLATION OF ALL ELECTRICAL WORK, INCLUDING ELECTRICAL AND COMMUNICATIONS OUTLETS IN WALLS AND FLOOR, LIGHTING FIXTURES WITH LAMPS, SWITCHES, DIMMERS, EMERGENCY BATTERY UNITS, ETC., AND ASSOCIATED BRANCH CIRCUIT WIRING, DISCONNECT SWITCH SPECIAL RECEPTACLES, ETC. ALL SPECIAL EQUIPMENT, SUCH AS FANS, AIR CONDITION UNITS, COPIERS, ETC, WILL BE FURNISHED BY OTHERS (U.O.N). WHERE EQUIPMENT REQUIRES PERMANENT CONNECTIONS SHALL BE PROVIDED WITH APPROPRIATE DISCONNECTING MEANS.

2. ELECTRICAL CONTRACTOR SHALL COORDINATE ALL WORK SHOWN N DRAWINGS WITH OTHER TRADES TO ASSURE THAT ALL SYSTEMS ARE COMPLETE AND OPERATIONAL. THIS CONTRACTOR SHALL COORDINATE ALL EQUIPMENT LOCATIONS AND CONDUIT RUNS SUPPLIED AND/OR INSTALLED UNDER THIS SECTION TO AVOID CONFLICTS OR OBSTRUCTIONS TO OTHER TRADES. THIS CONTRACTOR SHALL PROVIDE ALL NECESSARY PULL BOXES, VERTICAL SUPPORT BOXES, AND CONDUIT OFFSETS REQUIRED TO ACCOMPLISH THE ABOVE NOTED COORDINATION AT NO ADDITIONAL COST TO THE OWNER, WHETHER OR NOT INDICATED ON PLANS. ALL VERTICAL SUPPORT BOXES, PULL BOXES, ETC, SHALL BE INSTALLED WHERE REQUIRED TO FACILITATE PULLS AND AT CODE REQUIRED INTERVALS, AT A MINIMUM

3. CONDUIT RUNS INDICATED ON PLAN ARE FOR REFERENCE ONLY. EXACT LOCATIONS AND ELEVATION SHALL BE DETERMINED AFTER COORDINATION WITH OTHER TRADES. THIS CONTRACTOR SHALL SUPPLY, AS PART OF THEIR SHOP DRAWING SUBMISSION, THE EXACT LOCATION OF ALL CEILING MOUNTED EQUIPMENT AND CONDUIT RUNS INCLUDING PROPOSED LOCATIONS AND MEANS OF SUPPORT AS WELL AS THE EXPECTED LOAD CONCENTRATION AT THE POINTS OF ATTACHMENT. THE ABOVE NOTED INFORMATION SHALL BE REVIEWED B THE STRUCTURAL ENGINEER BEFORE ANY WORK IS TO COMMENCE.

4. FURNISH AND INSTALL ALL NECESSARY CABLE SUPPORT BOXES, PULL BOXES AND CONDUIT SUPPORTS, WHERE NOTED AND AS REQUIRED BY APPLICABLE CODES. ALL LOW TENSION (COMMUNICATIONS, SECURITY, A/V, ETC,) CONDUIT, FIRE ALARM CONDUIT, ETC., WHICH HAVE RUNS IN EXCESS OF 100 FEET IN LENGTH AND/OR CONTAINING BENDS IN EXCESS OF 180 DEGREES SHALL BE PROVIDED WITH A PULLBOX. ALL PULLBOXES SHALL BE LABELED FOR THEIR INTENDED USE. DECALS SHALL BE PROVIDED TO INDICATE VOLTAGE LEVEL. FOR ALARM SYSTEM BOXES SHALL BE PAINTED RED, AND ALL WIRE AND CABLE PROVIDED UNDER THIS SECTION SHALL BE TAGGED (WITH FEEDER OR BRANCH CIRCUIT DESIGNATION) AT ALL BOXES. WHERE CONDUIT BENDS ARE REQUIRED IN COMMUNICATIONS RACEWAYS. PULL BOXES FOR COMMUNICATION RACEWAYS WILL BE PROVIDED IN STRAIGHT PULLS ONLY. LABEL EACH RACEWAY (PER TECHNOLOGY DEPT. REQUIREMENTS) EVERY 50 FEET HORIZONTALLY AND ON EACH FLOOR VERTICALLY. SUBMIT LABELING SYSTEM FOR REVIEW.

5. UNLESS SPECIFICALLY APPROVED. NO WIRES SHALL BE PULLED IN UNTIL THE CONDUIT SYSTEM IS COMPLETED. NO GREASE OR OIL SHALL BE USED TO FACILITATE THE PULLING OF WIRES; ONLY APPROVED PULLING COMPOUND SHALL BE USED, ALL WIRES SHALL BE CONTINUOUS BETWEEN OUTLET AND OUTLET, OR FROM PANELBOARD TO THE FIRST OUTLET. JOINTS THAT BECOME NECESSARY IN CIRCUIT WORK AT THE OUTLETS SHALL BE MADE WITH APPROVED PRESSURE CONNECTORS. ALL JOINTS SHALL BE COVERED WITH AN INSULATION EQUAL TO THAT ON THE CONDUCTORS. APPROVED PRESSURE CONNECTORS, IDEAL WINGNUTS, SCOTCH-LOCK, BUCHANAN, OR AS APPROVED, SHALL BE USED,

6. EXACT LOCATIONS AND MOUNTING HEIGHTS OF ALL LIGHTING FIXTURES, SWITCHES, WALL OUTLETS, ETC., SHALL BE IN ACCORDANCE WITH ARCHITECTURAL DRAWINGS.

7. NO ELECTRICAL CONNECTIONS SHALL BE MADE TO, OR WORK PERFORMED ON, ENERGIZED EQUIPMENT.

8. FINAL CONNECTIONS TO EQUIPMENT SHALL BE MADE ACCORDING TO VENDOR APPROVED SHOP DRAWINGS.

9. VERIFY ELECTRICAL REQUIREMENTS OF ALL NEW EQUIPMENT TO BE USED. ALL SPECIAL PURPOSE OUTLETS INDICATED ON PLAN SHALL BE VERIFIED WITH EQUIPMENT MANUFACTURER PRIOR TO INSTALLATION, TO ENSURE PROPER WIRING AND COMPATIBILITY WITH ATTACHMENT PLUGS OR JUNCTION BOXES THAT MAY BE FURNISHED AS AN INTEGRAL PART OF THE EQUIPMENT.

10. COORDINATE ALL LOCATIONS AND HEIGHTS OF STUB-UPS AND OUTLETS IN FIELD WITH VENDORS AND/OR FURNITURE MANUFACTURERS'S APPROVED SHOP DRAWINGS. ALL RECEPTACLES ARE TO BE ACCESSIBLE.

11. ALL ELECTRICAL SHALL BE ACCESSIBLE BELOW COUNTERS OR BEHIND EQUIPMENT. CONTRACTOR SHALL COORDINATE EXACT LOCATION OF EQUIPMENT RECEPTACLES WITH EQUIPMENT MANUFACTURER'S REQUIREMENTS AND THE LOCAL INSPECTOR.

12. ELECTRICAL CONTRACTOR SHALL PROVIDE DISCONNECTS FOR ALL EQUIPMENT PER CODE AND SHALL COORDINATE ALL DISCONNECT SWITCH REQUIREMENTS AND LOCATION WITH THE ELECTRICAL INSPECTOR, VENDORS APPROVED SHOP DRAWING AND FINAL EQUIPMENT LOCATIONS.

13. ELECTRICAL CONTRACTOR SHALL VERIFY PHASE LOAD BALANCING ON POWER PANELS UPON COMPLETION OF THE ELECTRICAL INSTALLATION. INCLUDE RE-DISTRIBUTION OF CIRCUITS WITHIN PANELS TO BALANCE WITHIN A 10% WINDOW (+/-5%).

14. ALL CONDUIT AND CABLE "HOMERUNS" SHALL CONSIST OF A SINGLE CIRCUIT PER CONDUIT FOR FEEDERS SERVED BY AN OVERCURRENT PROTECTIVE (OCP) DEVICE IN EXCESS OF 20 AMPERES, SINGLE POLE. WHERE WIRE AND CONDUIT BRANCH CIRCUITS SHARE A CONDUIT HOMERUN, OCP LESS THAN OR EQUAL TO 20 AMPERES SINGLE POLE). THERE SHALL BE A MAXIMUM OF THREE CIRCUITS COMBINED IN A RACEWAY TO THE PANELBOARD, UNLESS OTHERWISE NOTED. ALL CONDUCTORS SHALL BE DERATED PER NATIONAL ELECTRICAL CODE (LATEST VERSION). COMBINING OF MULTIPLE HOMERUNS (MORE THAN THREE) IN A SING CONDUIT SHALL NOT BE PERMITTED.

15. ALL CONDUIT SHOWN FOR INDOOR WORK SHALL BE EMT (¾" MINIMUM) WITH SET-SCREW TYPE COUPLINGS UNLESS OTHERWISE NOTED.

16. PROVIDED IMC CONDUIT WITH THREADED COUPLINGS WHERE REQUIRED BY CODE.

17. TYPE MC CABLE MAY BE UTILIZED FOR BRANCH LIGHTING AND RECEPTACLE CIRCUITRY, WHERE PERMITTED BY CODE AND PROVIDED THAT:
   a. IT IS NOT LOCATED WITHIN VIEW, ALL EXPOSED RACEWAYS MUST BE IN CONDUIT.
   b. CONTAINS AN INSULATED GROUND WIRE.
   c. CONDUIT IS RUN TO THE FIRST DEVICE DOWN-LINE OF THE PANEL (I,E. RECEPTACLE, LIGHT FIXTURE, ETC.).

18. INCLUDE ALL LABOR, MATERIALS, AND APPLICATIONS REQUIRED FOR THE FURNISHING, INSTALLING AND TESTING OF ALL WORK SHOWN ON THE DRAWINGS AND SPECIFIED HEREIN, IN A MANNER SATISFACTORY TO THE ARCHITECT.

19. WHERE CONDUITS, CABLE TRAY OR OTHER ELECTRICAL EQUIPMENT PENETRATE FIRE OR SMOKE RATED WALLS, PARTITIONS, FLOOR SLABS, ETC., THE SPACE BETWEEN THE SLEEVE OR CUTOUT AND THE ELECTRICAL EQUIPMENT SHALL BE CAULKED WITH A UL LISTED, INTUMESCENT TYPE, APPROVED FIRESTOP SYSTEM. SPACE BETWEEN THE SLEEVE OR CUTOUT AND THE ELECTRICAL EQUIPMENT SHALL BE SIZED IN ACCORDANCE WITH THE MANUFACTURER'S REQUIREMENTS FOR CONDUIT SIZE AND DAMMING MATERIAL THICKNESS FOR THE TYPE OF RATED CONSTRUCTION FOR WHICH THE SYSTEM IS TO BE USED. THE FIRESTOP SYSTEM SHALL BE AS MANUFACTURED BY 3M FIR PROTECTION PRODUCTS OR AS APPROVED. SEE ARCHITECTURAL DRAWINGS FOR FIRE RATING OF WALLS AND FLOORS.

20. WHERE WORK IS ONGOING IN ELECTRICAL PANELS THE COVERS ARE NOT TO BE LEFT OFF UNLESS WORK IS CURRENTLY BEING PERFORMED ON THE PANEL. COVERS SHALL BE REPLACED EACH NIGHT AT THE END OF SHIFT.

21. TEMPORARY POWER FROM EXISTING PANELS FOR LIGHTS, DRILLS, WELDING EQUIPMENT, ETC,. SHALL BE LABELED ON THE PANEL AND PRE-APPROVED BY BUILDING OWNER/MANAGER 48 HOURS PRIOR TO INSTALLATION.

C. ARCHITECT'S AND/OR ENGINEER'S REVIEW

1. SUBMIT SHOP DRAWINGS FOR REVIEW PRIOR TO THE START OF ANY WORK. ANY WORK OR EQUIPMENT INSTALLED PRIOR TO REVIEW OF SHOP DRAWINGS AND FOUND TO BE UNACCEPTABLE SHALL BE REMOVED AND MODIFIED AT THE CONTRACTOR'S SOLE EXPENSE INCLUDING ANY RESULTANT SCHEDULING DELAYS EXPERIENCED BY ANY TRADE.

2. THE ARCHITECT AND/OR ENGINEER WILL REVIEW SHOP DRAWINGS AND SAMPLES FOR CONFORMANCE WITH THE DESIGN CONCEPT OF THE PROJECT AND THE INFORMATION CONTAINED IN THE CONTRACT DOCUMENTS. THE ARCHITECT'S AND/OR ENGINEER'S REVIEW OF SHOP DRAWINGS AND SAMPLES IS ONLY FOR THE CONVENIENCE OF THE OWNER IN FOLLOWING THE WORK AND DOES NOT RELIEVE THE CONTRACTOR OF RESPONSIBILITY FOR DEVIATIONS FROM THE REQUIREMENTS OF THE CONTRACT DOCUMENTS. THE ARCHITECT'S AND/OR ENGINEER'S REVIEW SHALL NOT BE CONSTRUED AS A COMPLETE OR DETAILED CHECK OF THE WORK SUBMITTED, NOR SHALL IT RELIEVE THE CONTRACTOR OF RESPONSIBILITY FOR ERRORS OF ANY SORT IN THE SHOP DRAWINGS AND SAMPLES, OR FROM THE NECESSITY OF FURNISHING ANY WORK REQUIRED BY THE CONTRACT DOCUMENTS WHICH MAY HAVE BEEN OMITTED FROM SHOP DRAWING SUBMITTALS.

3. THE REVIEW OF A SEPARATE ITEM SHALL NOT INDICATE REVIEW OF THE COMPLETE ASSEMBLY IN WHICH IT FUNCTIONS. NOTHING IN THE ARCHITECT'S ANS/OR ENGINEER'S REVIEW OF SHOP DRAWINGS AND SAMPLES SHALL BE CONSIDERED AS AUTHORIZING:
   a. A DEPARTURE FROM CONTRACT DOCUMENTS OR SPECIFICATIONS, OR,
   b. ADDITIONAL COST TO THE OWNER, OR,
   c. INCREASED TIME FOR COMPLETION OF THE WORK.

4. NO PART OF THE WORK SHALL BE IN THE FABRICATION SHOP OR IN THE FIELD UNTIL THE ARCHITECT AND/OR ENGINEER HAS REVIEWED THE SHOP DRAWINGS AND SAMPLES FOR THAT POTION OF THE WORK. THEREAFTER, THE WORK SHALL BE EXECUTED IN ACCORDANCE WITH THE CONTRACT DOCUMENTS AND THE INDICATED STATUS OF THE REVIEWED SHOP DRAWING.

5. SAMPLES SHALL BE SUBMITTED FOR REVIEW WHEN REQUESTED BY THE ARCHITECT AND/OR ENGINEER.

6. TWO WEEKS AFTER AWARD OF CONTRACT SUBMIT A SHOP DRAWING LOG FOR REVIEW WITH SUBMITTAL DATES AND SUBMITTAL TYPE.

7. PROVIDE OPERATIONS AND MAINTENANCE MANUALS FOR ALL EQUIPMENT AND MATERIALS.

D. RECORD DRAWINGS

1. PREPARE AND FURNISH TO OWNER "AS BUILT" PLANS FOR ALL WORK INSTALLED. PROVIDE CAD DRAWINGS AND CAD FILES ON A COMPACT DISC COMPLETED IN THE LATEST VERSION OF AUTOCAD. ALL DRAWINGS SHALL BE IN A STYLE COMMENSURATE WITH THE ENGINEERING DESIGN. THE ENGINEERING DESIGN CAD DRAWINGS OR BACKGROUNDS WILL BE FURNISHED FOR USE TO THIS CONTRACTOR FOR THE PURPOSE OF THIS SUBMISSION (SUBMIT A CAD INDEMNIFICATION AGREEMENT).

2. UPON CONSTRUCTION, KEEP AN ACCURATE RECORD OF ALL DEVIATIONS BETWEEN THE WORK AS SHOWN ON DRAWINGS AND THAT WHICH IS ACTUALLY INSTALLED. THIS RECORD SET OF PRINTS SHALL BE KEPT AT THE JOB SITE FOR INSPECTION.

3. UPON COMPLETION OF INSTALLATION, SUBMIT ONE SET OF BLACK AND WHITE PRINTS OF THESE "AS-BUILT" RECORD DRAWINGS TO THE CONSULTING ENGINEER FOR REVIEW. AFTER REVIEW BY THE CONSULTING ENGINEER, MAKE NECESSARY CHANGES TO THESE PRINTS AND THEN DELIVER THEM TO THE OWNER FOR RECORD. FINAL PAYMENT WILL BE WITHHELD UNTIL COMPLETION OF "AS-BUILT" DRAWINGS.

4. AS-BUILT DRAWINGS SHALL CONTAIN EXACT ROUTING AND ELEVATIONS OF ALL CONDUIT BANKS, ACTUAL PANELBOARD CIRCUIT BREAKER POLE POSITIONS USED FOR EACH CIRCUIT, AND EXACT LOCATION OF ALL EQUIPMENT, ALL DIMENSIONS SHALL BE REFERENCED TO BUILDING STRUCTURE CENTERLINES.

E. EQUIPMENT SPECIFICATIONS

1. ALL EQUIPMENT AND MATERIALS SHALL BE NEW, UL LISTED AND SHALL CONFORM TO ANY ADDITIONAL LABELING, TESTING AND CONSTRUCTION REQUIREMENTS ESTABLISHED BY THE GOVERNING AUTHORITIES. SAME SHALL BE GUARANTEED FOR 1 YEAR SUBSEQUENT TO FINAL ACCEPTANCE.

2. ALL EQUIPMENT (ELECTRICAL AND MECHANICAL) SHALL BE SPECIFIED TO HAVE VOLTAGE RATINGS COMPATIBLE WITH THE PROVISIONS OF ANSI C84.

3. ALL CONDUITS FOR LIGHTING AND POWER SYSTEMS SHALL BE ¾" (MINIMUM).

4. PROVIDE CONDUIT EXPANSION FITTINGS TOGETHER WITH BONDING JUMPER AND SUITABLE SLEEVES WHERE REQUIRED. CONDUIT EXPANSION FITTING SHALL BE INSTALLED IN EACH CONDUIT RUN WHEREVER IT CROSSES AN EXPANSION JOINT IN THE STRUCTURE. THE EXPANSION FITTING SHALL BE INSTALLED ON ONE SIDE OF THE JOINT WITH ITS SLIDING SLEEVE END FLUSH WITH THE AND WITH A LENGTH OF BONDING JUMPER IN THE EXPANSION JOINT EQUAL TO AT LEAST THREE TIMES THE NORMAL WIDTH OF THE JOINT.

5. ALL 15A OR 20A, SINGLE POLE, 120 VOLT OR 208 VOLT BRANCH CIRCUIT RUNS IN EXCESS OF 100 FEET FROM THE PANEL TO THE DEVICE SHALL BE PROVIDED WITH #10 MINIMUM AWG WIRE FOR ITS ENTIRE LENGTH.

6. JUNCTION OR PULL BOXES SHALL BE FURNISHED AND INSTALLED WHERE INDICATED ON PLANS AND WHEREVER ELSE SUCH A BOX MAY BE NECESSARY TO FACILITATE INSTALLATION OR CONFORM TO CODE REQUIREMENTS. COORDINATE LOCATIONS OF SAME WITH ARCHITECT FOR ACCESSIBILITY AND AESTHETIC CONSIDERATIONS. GENERALLY, JUNCTION BOXES AND PULL BOXES SHALL BE INSTALLED EVERY 100 FEET IN CONDUIT HORIZONTAL RUNS AND SHALL NOT BE EXPOSED IN FINISHED SPACES. ALL CABLES WITHIN PULL BOXES SHALL BE PROPERLY TAGGED FOR IDENTIFICATION. LABEL ALL CONDUITS WITH FEEDER DESIGNATION AT ENTRY AND EXIT TO THE BOX.

7. INSULATING BUSHING OR INSULATING THROATS SHALL BE INSTALLED ON ALL FITTINGS.

F. PANELBOARDS

1. ALL PANELBOARDS SHALL BE OF THE ENCLOSED TYPE, FLUSH OR SURFACE MOUNTED, AS REWIRED, IN CODE GAUGE STEEL CABINETS, WITH STEEL TRIM, CONCEALED HINGES, DOORS AND FLUSH TYPE LOCKS, ALL KEYED ALIKE. PROVIDE DUAL CONCEALED HINGED DOORS (DOOR-IN-DOOR CONSTRUCTION) WITH TWO KEYED LATCHES, AND WITHOUT BOLTS OR SCREWS ON THE NON-HINGED SIDE OF THE DOORS WHERE INDICATED ON DOCUMENTS (SEE ARCHITECTURAL DRAWINGS.)

2. ALL BUSES, INCLUDING NEUTRAL, SHALL BE ELECTRICAL GRADE HARD-DRAWN COPPER AND SIZED IN CONFORMANCE WITH NEMA STANDARDS. BUSES SHALL BE ARRANGED FOR SEQUENCE PHASING AND LOADS SHALL BE BALANCED AS EQUALLY AS POSSIBLE AMONGST THE THREE PHASES.

3. PANELBOARDS SHALL BE EQUIPPED WITH QUICK-MAKE, QUICK-BREAK FUSED SWITCHES OR BOLT-ON MOLDED CASE CIRCUIT BREAKERS, OF VOLTAGE REQUIRED, AND OF SIZE AND NUMBER OF POLES INDICATED ON THE SCHEDULES.

4. A TYPE WRITTEN DIRECTORY OF 5 INCHES X 8 INCHES WITH METAL FRAME AND LEXAN FACE SHALL BE PROVIDED ON THE INSIDE OF THE DOOR OF EACH CABINET, INDICATING THE LOAD SERVED BY EACH CIRCUIT. UTILIZE ARCHITECTURAL DRAWINGS TO INDICATE ROOM NAMES AND NUMBERS OF ALL EQUIPMENTS SERVED. (E.G 1. RECEPT: ROOMS27-202, 203, 205, 207). UPDATE PANEL DIRECTORIES OF ALL EXISTING PANELS.

5. POWER, LIGHTING AND UTILITY PANELS FOR 120/208 VOLTS SHALL BE BOLT-ON CIRCUIT BREAKER TYPE UNLESS OTHERWISE NOTED. SINGLE POLE BRANCHES SHALL BE BOLT-ON TYPE OF AT LEAST 10,000 AMPERES RMS SYMMETRICAL INTERPRETING CAPACITY (OR AS INDICATED ON THE DRAWINGS). MULTIPLE POLE BREAKERS SHALL BE COMMON TRIP, OF THE CAPACITY AND NUMBER OF POLES AS INDICATED IN SCHEDULES. PANELBOARDS SHALL BE EQUIPPED WITH 200% SOLID NEUTRAL BAR AND CONTAIN THE NUMBER OF POLES, OVERCURRENT DEVICES AND BUSED SPACES AS SPECIFIED IN SCHEDULE. PANELBOARDS SHALL INCLUDE A SEPARATE GROUND BUS ISOLATED FROM THE CASING. FUSIBLE TYPE PANELS SHALL CONFORM TO REQUIREMENTS OF ABOVE PARAGRAPH.

6. PROVIDE ISOLATED GROUND BUSES ON STAND-OFF ISOLATORS WHERE INDICATED ON SCHEDULES.

7. PROVIDE NEW CIRCUIT BREAKERS IN PANELS AS REQUIRED TO MEET THE SCHEDULES OR CIRCUIT DESIGN INTENT.

8. GUTTER SPACE SHALL BE INCREASED WHEN CONTAINING FEEDER TAPS.

9. PROVIDE WIRE TROUGHS WHERE ACCESS TO THE FLOOR SYSTEM IS REQUIRED.

10. WHERE SPACE LIMITATIONS REQUIRED REDUCED PANEL WIDTH, PROVIDE VERTICAL (SINGLE ROW) BREAKER TYPE PANELS AS PART OF THE INITIAL SCOPE PRICE.

11. ALL PANEL BUS BARS SHALL CONSIST OF A MINIMUM 1/8 INCH DEPTH COOPER BUS.

12. PROVIDE SHUNT TRIP MAIN CIRCUIT BREAKERS FOR ALL PANELS TO BE CONTROLLED BY BREAKGLASS STATIONS, ANSUL SYSTEMS(IN KITCHENS OR SERVERIES) ETC.

13. PROVIDE GFI TYPE BRANCH CIRCUIT BREAKERS FOR ALL CIRCUITS SERVING KITCHENS, HEAT TRACING CIRCUITS, H-WATT CIRCUITS, FREEZE PROTECTION CIRCUITS, WINDOW WASHING CIRCUITS, OUTDOOR CIRCUITS, ETC. AND AS REQUIRED BY CODE.

G. FUSES

1. ALL FUSES SHALL BE OF THE SAME MANUFACTURER, BUSSMAN, OR AS APPROVED, AND SHALL BE INSTALLED, AS REQUIRED. IN ALL CUTOUTS, PANE.S AND SAFETY SWITCHES.

2. UNLESS OTHERWISE NOTED, FUSES SHALL BE BUSSMAN TYPE LPN, LPS OR KRP-C

H. SECONDARY TRANSFORMERS

1. PROVIDE DRY TYPE 100% NON-LINER, NON-SINUSOIDAL TRANSFORMERS OF QUANTITY AND KVA RATING AS SHOWN ON DOCUMENTS, 3Ø, 480 VOLT-DELTA-208Y/120 VOLT, 3Ø, 4 W, FURNISHED W/TWO 2-1/2% TAPS ABOVE AND FOUR 2-1/2% BELOW NORMAL 480V PRIMARY FOR TRANSFORMERS. THE NEUTRAL OF THE TRANSFORMERS SHALL BE BROUGHT UP TO A LUG AND BOLT INSIDE OF CASE SO THAT THE NEUTRAL CAN BE GROUNDED EXTERNALLY. ALL REQUIREMENTS SHALL BE IN ACCORDANCE WITH UL 1561 AND UL 506.

2. TRANSFORMERS SHALL BE SPECIFICALLY DESIGNED TO SUPPLY RATED CURRENT WHEN LOADED WITH NONLINEAR LOADS AND MEET THE MINIMUM REQUIREMENTS OF EPACT2005 DEPARTMENT OF ENERGY'S STANDARD LEVEL 3 (CSL-3).

3. A COPPER ELECTRONIC SHIELD SHALL BE INSERTED BETWEEN THE PRIMARY AND SECONDARY WINDINGS TO ATTENUATE HIGH FREQUENCY HARMONICS.

4. THE SECONDARY NEUTRAL SHALL BE TWICE THE AMPACITY OF THE SECONDARY PHASE CONDUCTORS, AND THE PRIMARY WINDING CONDUCTOR SHALL BE OF SUFFICIENT SIZE TO LIMIT THE TEMPERATURE RISE TO ITS RATED VALUE, EVEN WITH THE CIRCULATING 3RD HARMONIC CURRENT.

5. THE TRANSFORMER SHALL UTILIZE AN INSULATION SYSTEM THAT HAS BEEN PROPERLY TEMPERATURE CLASSIFIED AND LISTED BY UL. TRANSFORMERS SHALL HAVE A 220 CLASSIFICATION AND A 150 DEGREE CELSIUS WINDING TEMPERATURE RISE AT FULL LOAD.

6. ALL TRANSFORMERS SHALL HAVE VIBRATION ISOLATORS THAT ISOLATE THE CASE FROM THE CORE AND COIL ASSEMBLY. TRANSFORMERS SHALL BE CAPABLE OF FLOOR, WALL OR CEILING (TRAPEZE) MOUNTING, AS INDICATED ON THE DRAWINGS. TRANSFORMERS SHALL BE TRAPEZE MOUNTED U.O.N.

7. VIBRATION ISOLATORS EQUAL TO MASON INDUSTRIES TYPE HD AND TYPE CD FOR TRAPEZE AND FLOOR MOUNTING RESPECTIVELY, SHALL BE INSTALLED BETWEEN CASE AND TRAPEZE OR FLOOR.

8. PROVIDE COPPER GROUND CONDUCTOR, WITH EXOTHERMIC (CADWELD OR AS APPROVED) TO BUILDING STEEL WHERE STEEL IS PROVIDED. SIZE OF GROUND SHALL BE CODE MINIMUM OR AS INDICATED ON THE DRAWINGS. ALL FINAL CONNECTIONS TO TRANSFORMER CASING SHALL BE MADE USING A MINIMUM 24 INCH LENGTH OF FLEXIBLE METAL CONDUIT WITH GROUND BUSHING. ALL CONDUCTORS SHALL BE IN CONDUIT.

I. GENERAL

1. OUTLET BOXES SHALL BE CODE GAUGE GALVANIZED STAMPED STEEL, 4 INCH SQUARE BY 1-1/2 INCHES DEEP FOR POWER AND 4 INCHES SQUARE BY 2-1/2 INCHES DEEP FOR COMMUNICATION, FIRMLY ANCHORED IN PLACE. BOX VOLUME SHALL BE AS REQUIRED BY GOVERNING CODES WITH BLANK COVERS PROVIDED FOR ALL BOXES USED FOR JUNCTION PURPOSES. GEM BOXES SHALL ONLY BE USED WHERE DIMENSIONAL RESTRAINTS EXIST AND WHERE THE CONTRACTOR HAS OBTAINED PERMISSION FROM THE ENGINEER. MULTI-GANG BOXES SHALL BE PROVIDED WITH EXTENSION COLLARS MOUNTED WITHIN 1/8 INCH OF OUTER SURFACE. WHERE OUTLET BOXES ARE SHOWN FOR FLUSH MOUNTED DEVICES, A SINGLE GANG PLASTER RING SHALL BE PROVIDED, AND MOUNTED WITH 1/8 INCH OF OUTER SURFACE.

2. DISCONNECT SWITCHES SHALL BE QMQB FUSIBLE OR NONFUSIBLE WITH CURRENT AND VOLTAGE RATING AS INDICATED ON PLANS. SWITCHES SHALL BE HORSEPOWER RATED, ENCLOSED TYPE, SUITABLE FOR PADLOCKING IN OPEN POSITION.

3. HORSEPOWER RATED THERMAL SWITCHES (BRYANT OR AS APPROVED) SHALL BE USED FOR ALL MOTOR CIRCUITS. ELECTRICAL CONTRACTOR SHALL INSTALL WHERE APPLICABLE TOGGLE SWITCHES FOR USE AS DISCONNECTED. THESE SWITCHES SHALL BE "T" RATED FOR RESISTANCE LOADS AND "M" RATED FOR MOTOR LOADS.

4. STANDARD DUPLEX CONVENIENCE RECEPTACLES SHALL BE SPECIFICATION GRADE NEMA 5-15R, 5-20R, 2 POLE, 3 WIRE, GROUNDED, 15 OR 20 AMPERE RATED FOR DEVICES SHOWN ON A 15 OR 20 AMPERE CIRCUIT (RESPECTIVELY). PROVIDE DEVICES RATED TO THE EQUIPMENT CIRCUIT BREAKER SIZE UNLESS OTHERWISE NOTED. GROUND FAULT TYPE SHALL BE USED WHERE REQUIRED BY GOVERNING CODES INCLUDING ALL DEVICES SHOWN TO BE WITHIN SIX FEET OF A SINK/WATER.

5. SWITCHES SHALL BE FLUSH, SPECIFICATION GRADE, QUIET TUMBLER TYPE, GROUNDED, BEHIND COMMON PLATE WITH BARRIERED BACK BOX WHERE REQUIRED BY CODE FOR MULTIPLE CIRCUITS GREATER THAN 250 VOLTS. SINGLE POLE SWITCHES SHALL BE 20 AMPERES, 277 VOLT.

6. DEVICE TYPES, MANUFACTURES AND COLORS SHALL BE SPECIFIED BY THE ARCHITECT. IF NO SPECIFICATION HAS BEEN PROVIDED, THIS CONTRACTOR SHALL OBTAIN ALL INFORMATION REGARDING THE ABOVE FROM THE ARCHITECT PRIOR TO THE SUBMISSION OF BID, OR SHALL INCLUDE THE ABILITY TO FURNISH ANY MANUFACTURER SELECTED BY THE ARCHITECT DURING THE SHOP DRAWING SUBMISSION PHASE.

7. DEVICE PLATES SHALL BE AS INDICATED ON THE ARCHITECTURAL DRAWINGS. COORDINATE EXACT COLOR WITH ARCHITECT.

8. ALL CABLES SHALL BE COPPER OR ALUMINUM WITH THWN OR THHN INSULATION FOR HORIZONTAL APPLICATIONS AND XHHW FOR VERTICAL APPLICATIONS (I.E. WHEN PASSING THROUGH A CABLE SUPPORT BOX), EMPLOYED AT THE 75°C CODE RATED AMPACITY. NO SMALLER THAN No.12 AWG SHALL BE USED UNLESS SPECIFICALLY NOTED ON PLANS. COLOR CODING SHALL CONFORM TO CODE REQUIREMENTS. DERATE ALL CABLES PER LATEST VERSION OF THE NATIONAL ELECTRICAL CODE.

9. ALL CONDUCTORS #10 AND SMALLER SHALL BE SOLID COPPER CONDUCTORS. ALL CONDUCTORS #8 AND LARGER SHALL BE STRANDED COPPER OR ALUMINUM.

10. ALL CABLING FURNISHED FOR INSTALLATION EXPOSED (NOT IN AN ENCLOSED RACEWAY) IN AN AIR PLENUM CEILING OR FLOOR SHALL BE APPROVED FOR USE BY GOVERNING AUTHORITIES, AND SHALL CONFORM TO UL 910 WITH A MINIMUM OF 125 DEGREES CELSIUS RATED JACKED.

11. ALL SUPPLIED LUGS FOR EQUIPMENT REQUIRING HARD-WIRED CONNECTIONS, ETC. SHALL BE DOUBLE INDENT, 2 BOLT HOLE, LONG BARREL AND COMPRESSION TYPE. PROVIDE DOUBLE INDENT "HEXAGONAL" COMPRESSION DIES AND TOOL (T & B OR BURNDY OR AS REVIEWED). MECHANICAL LUGS, SINGLE INDENT COMPRESSION TOOLS AND UNIVERSAL DIES SHALL NOT BE PERMITTED. ALL COMPRESSION TOOLS AND DIES SHALL BE MANUFACTURED BY THE LUG VENDOR.

12. ALL SUPPLIED IN-LINE SPLICE CONNECTORS, "T: CONNECTORS, ETC., SHALL BE DOUBLE INDENT (PER CONDUCTOR), LONG BARREL AND COMPRESSION TYPE. PROVIDE DOUBLE INDENT "HEXAGONAL" COMPRESSION DIES AND TOOL (T & B, BURNDY OR AS REVIEWED). MECHANICAL CONNECTORS, SINGLE INDENT COMPRESSION TOOLS AND UNIVERSAL DIES SHALL NOT BE PERMITTED. ALL COMPRESSION TOOLS AND DIES SHALL BE MANUFACTURED BY THE CONNECTOR VENDOR.

13. PROVIDE LOCAL DISCONNECTS FOR ALL MOTORS, HARD-WIRED PANTRY/KITCHEN EQUIPMENT AND HOT WATER HEATERS, WHETHER OR NOT SHOWN ON PLAN. DISCONNECTS SHALL BE SIZED PER THE OVERCURRENT PROTECTION AND LOCATED PER THE ENGINEER AND ARCHITECT.

14. PROVIDE A 120 VOLT DEDICATED CIRCUIT FOR EACH CONDENSATE PUMP FOR ALL AC UNITS. COORDINATE WITH THE ENGINEER, THE PANEL AND BREAKER POSITION, PRIOR TO INSTALLATION.

15. ALL EQUIPMENT MATERIALS SHALL BE NEW, UL LISTED AND SHALL CONFORM TO ANY ADDITIONAL LABELING, TESTING AND CONSTRUCTION REQUIREMENTS ESTABLISHED BY THE GOVERNING AUTHORITIES. SAME SHALL BE GUARANTEED FOR 1 YEAR SUBSEQUENT TO FINAL ACCEPTANCE.

16. ALL EQUIPMENT (ELECTRICAL AND MECHANICAL) SHALL BE SPECIFIED TO HAVE VOLTAGE RATINGS COMPATIBLE WITH THE PROVISIONS OF ANSI C84.

17. DISCONNECTS FOR INCOMING SERVICE SHALL BE SERVICE RATED.

J. KITCHEN NOTES

1. ELECTRICAL CONTRACTOR SHALL COORDINATE ALL STUB-UP LOCATIONS AND HEIGHTS, MOUNTING HEIGHTS AND DIMENSIONS, OUTLET LOCATIONS IN FIELD WITH VENDOR'S APPROVED SHOP DRAWINGS.

2. ELECTRICAL CONTRACTOR SHALL MAKE FINAL CONNECTIONS TO EQUIPMENT PER VENDOR'S APPROVED SHOP DRAWINGS.

3. COVER PLATES FOR ALL OUTLETS, JUNCTION BOXES, ETC. MOUNTED ABOVE COUNTERTOPS SHALL BE GASKETED AND STAINLESS STEEL.

4. APPROVED TYPE HIGH TEMPERATURE WIRE SHALL BE USED FOR CONNECTION TO HOOD LIGHTING, RANGES, HOT PLATES, ETC.

5. ELECTRICAL CONTRACTOR SHALL COORDINATE RECEPTACLE TYPES REQUIRED WITH PLUGS SUPPLIED WITH EQUIPMENT.

6. ALL DISCONNECT SWITCHES ARE TO BE PER SCHEDULES (UNLESS OTHERWISE NOTED) AND SHALL BE NEMA 3R. HORSEPOWER RATED SWITCHES SHALL BE USED FOR ALL MOTOR CIRCUITS, AND SHALL BE NEMA 3R. ELECTRICAL CONTRACTOR SHALL INSTALL WHERE APPLICABLE TOGGLE SWITCHES FOR USE AS DISCONNECTS. THESE SWITCHES SHALL BE "T" RATED FOR RESISTANCE LOADS AND "M" RATED FOR MOTOR.

7. ELECTRICAL CONTRACTOR SHALL VERIFY PHASE, LOAD, BALANCING ON POWER PANELS WITH APPROVED VENDOR'S EQUIPMENT, LOAD REQUIREMENTS, AND BALANCE TO WITH 10%.

8. ALL PANELS WHICH ARE NOT LOCATED WITHIN A CLOSET AND ARE OPEN TO THE KITCHEN/SERVERY AREA SHALL BE PROVIDED WITH BRUSHED STAINLESS STEEL, NEMA 3R COVERS.

9. ELECTRICAL CONTRACTOR SHALL BE RESPONSIBLE TO COORDINATE ALL DISCONNECT SWITCH REQUIREMENTS WITH ELECTRICAL INSPECTOR, VENDOR APPROVED SHOP DRAWINGS AND FINAL EQUIPMENT LOCATIONS.

10. KITCHEN DISTRIBUTION AND/OR POWER PANELS SHALL BE PROVIDED WITH GROUND AND NEUTRAL BUSSES.

11. PROVIDE SEPARATED GROUND WIRE (PER CODE) FOR EACH PIECE OF KITCHEN EQUIPMENT, UPSIZE CONDUIT AS REQUIRED TO ACCOMMODATE GROUND WIRE.

12. ELECTRICAL CONTRACTOR SHALL VERIFY ELECTRICAL REQUIREMENTS OF ALL NEW EQUIPMENT TO BE USED. ALL SPECIAL PURPOSE OUTLETS INDICATED ON PLAN SHALL BE VERIFIED WITH EQUIPMENT MANUFACTURER TO ENSURE PROPER WIRING AND COMPATIBILITY WITH ATTACHMENT PLUGS OR JUNCTION BOXES THAT MAYBE FURNISHED AS AN INTEGRAL PART OF THE EQUIPMENT.

13. PROVIDE LOCAL DISCONNECTS FOR ALL HARD-WIRED MOTORS, AND PANTRY/KITCHEN EQUIPMENT AND HOT WATER HEATERS, WHETHER OR NOT SHOWN ON PLAN. DISCONNECTS SHALL BE SIZED PER THE OVERCURRENT PROTECTION AND LOCATED PER THE ENGINEER AND ARCHITECT.

14. PROVIDE NEW CIRCUIT BREAKERS IN NEW PANELS AS REQUIRED TO MEET THE SCHEDULES OR CIRCUIT DESIGN INTENT.

15. ELECTRICAL CONTRACTOR TO PROVIDE ALL INTER WIRING FROM REMOTE COMPRESSOR TO TEMPERATURE CONTROLS FOR ALL REMOTE REFRIGERATION SYSTEMS AND ALSO PROVIDE INTER WIRING FROM TIME CLOCK FOR DEFROST CYCLE FOR ALL REMOTE FREEZER UNITS.

16. PROVIDE RELAYS, ENCLOSURES, ANSUL SYSTEM AND SHUT TRIP CIRCUIT BREAKER CONNECTIONS TO COMPLETE HOOD PROTECTION SYSTEMS AS DETAILED. LABEL ALL RELAYS WITH PHENOLIC NAMEPLATES.

17. ALL OUTLETS IN KITCHEN AREA SHALL BE GFI TYPE.

K. UNIT PRICES

1. AT THE SUBMISSION OF BID, PROVIDE A COMPREHENSIVE UNIT PRICE LIST TO FURNISH AND INSTALL CABLES, CONDUITS, PANELS, TRANSFORMERS, DISCONNECTS, CIRCUIT BREAKERS, RECEPTACLES, FIXTURES, SWITCHES. ETC. THE LIST SHALL CONSIST, AS A MINIMUM, OF ALL TYPES AND SIZES OF EQUIPMENT AS INCLUDED IN THE BASE PROJECT. ONLY THOSE BIDS CONTAINING A UNIT PRICE LIST SHALL BE CONSIDERED UNLESS WRITTEN PERMISSION HAS BEEN GRANTED ON BEHALF OF THE OWNER, ARCHITECT, ENGINEER AND/OR CONSTRUCTION MANAGER (OR GENERAL CONTRACTOR).

L. ELECTRONIC MEDIA REQUIREMENT

1. ALL INFORMATION INCLUDING, NOT LIMITED TO, SHOP DRAWING SUBMITTALS, "AS-BUILT" DRAWINGS, TEST RESULTS, AND OPERATION AND MAINTENANCE MANUALS SHALL BE SUBMITTED ON CD-ROM(S) PRIOR TO THE COMPLETION OF THE PROJECT.
   a. ALL "AS-BUILT" DRAWINGS SHALL BE IN ELECTRONIC .PDF FORMAT.
   b. ALL CUT SHEETS, SUBMITTALS, MANUALS, AND ASSOCIATED INFORMATION SHALL BE IN .PDF FORMAT.

2. EACH CD-ROM SHALL BE INDEXED TO ALLOW READY ACCESS TO ALL INFORMATION.

3. PROVIDE THREE (3) COPIES OF EACH CD-ROM.

AUTOMATIC TEMPERATURE CONTROLS COORDINATION NOTE:

1. THE MECHANICAL CONTRACTOR'S AUTOMATIC TEMPERATURE CONTROLS (ATC) SUBCONTRACTOR SHALL FURNISH AND INSTALL ALL LOW VOLTAGE POWER WIRING TO ALL NEW MECHANICAL EQUIPMENT CONTROLS. THE FOLLOWING ELECTRICAL WORK (RELATED TO ATC WORK) SHALL BE PERFORMED BY THE ELECTRICAL CONTRACTOR:
   A. POWER WIRING TO ALL MOTORS.
   B. POWER WIRING TO THE PRIMARY AUTOMATIC TEMPERATURE CONTROL PANELS.
   C. ALL FIRE ALARM WIRING FROM DUCT SMOKE DETECTORS TO THE FIRE ALARM SYSTEM.
   D. AUTOMATIC FAN SHUTDOWN WIRING FROM THE FIRE ALARM SYSTEM.

2. ELECTRICAL CONTRACTOR SHALL REVIEW MECHANICAL DRAWINGS TO DETERMINE AND COORDINATE THE FACILITY'S ATC SYSTEMS' ELECTRICAL REQUIREMENTS.

SOSH
- atlantic city, NJ - philadelphia, PA -

CONCORD ENGINEERING
www.concord-engineering.com
2311 Atlantic Avenue
Atlantic City, New Jersey 08401
(609) 272-9620

Anthony H. Caucci
Professional Engineer
New Jersey Lic. # 44806

ATLANTIC COUNTY VOTING MACHINE WAREHOUSE ALTERATION

235 DOLPHIN AVENUE
NORTHFIELD, NJ 08225

SUBMISSIONS

NO.	DATE:	DESCRIPTION:
	05/20/2022	CONSTRUCTION DOCUMENTS

DRAWING TITLE:
ELECTRICAL SHEET SPECIFICATIONS

DRAWN BY: DS
REVIEWED BY: EJT
PROJECT NO. 22013.00.001
DRAWING NO. E-000

SYMBOLS AND ABBREVIATIONS

SYMBOL	DESCRIPTION
14 EPKS-2	HOME RUN ARROW INDICATES PANEL AND CIRCUIT NUMBER
	WIRING RUN BELOW SLAB AND CONCEALED IN AN APPROVED RACEWAY
	120V, 20A DUPLEX RECEPTACLE
TV	RECESSED 120V, 20A DUPLEX RECEPTACLE WITH SURGE SUPPRESSION PROTECTION MOUNTED BEHIND TV DISPLAY
	120V, 20A QUADRAPLEX RECEPTACLE
	SPECIAL PURPOSE RECEPTACLE - E.C. SHALL FURNISH AND INSTALL A SPECIFICATION GRADE RECEPTACLE MOUNTED AS DIRECTED BY THE FOOD SERVICE DRAWINGS.
	DISCONNECT SWITCH AND POINT OF CONNECTION - SIZED AS REQUIRED.
	DATA OUTLET - E.C. SHALL COORDINATE MAKE & MODEL WITH OWNER AND FURNISH AND INSTALL NEW DATA OUTLET AND COVER PLATE IN LOCATION SHOWN. EXTEND NEW SHIELDED, PLENUM RATED CAT6 CABLE FROM NEW OUTLET TO IT RACK AND TERMINATE. ALL DATA CABLE INSTALLATION, TESTING, LABELING & TERMINATIONS SHALL BE BY CONTRACTOR.
TV	LED TV/MONITOR RECESSED OUTLET. EXTEND NEW SHIELDED, PLENUM RATED CAT6 CABLE FROM NEW TV OUTLET TO A/V RACKS AND TERMINATE, UNLESS NOTED OTHERWISE ON DRAWINGS. DATA CABLE INSTALLATION, TESTING, LABELING & TERMINATIONS SHALL BE BY CONTRACTOR.
A	LINEAR LED FIXTURE (LETTER SUBSCRIPT INDICATES FIXTURE TYPE)
A	LED RECESSED DOWNLIGHT FIXTURE (LETTER SUBSCRIPT INDICATES FIXTURE TYPE)
DOUBLE FACED / SINGLE FACE	SINGLE OR DOUBLE FACED EXIT SIGN WITH DIRECTIONAL ARROWS AS REQUIRED. MOUNT UNIT ON WALL ABOVE DOORWAYS OR CEILING MOUNTING AS REQUIRED.
	EMERGENCY BATTERY PACK
A	BRANCH CIRCUIT CONTINUATION - INDICATES MATCH-LINE CONTINUATION OF AN ELECTRICAL BRANCH CIRCUIT
S	SINGLE POLE LIGHTING SWITCH
S_D	LIGHTING DIMMER SWITCH
S_3	3-WAY LIGHTING CONTROL SWITCH
J	JUNCTION BOX - SIZE AS REQUIRED
	RECESSED MOUNTED PANELBOARD
	SURFACE MOUNTED PANELBOARD
A.F.F.	ABOVE FINISHED FLOOR
CTR	MOUNTED ABOVE MILLWORK COUNTER
E	EXISTING TO REMAIN
ER	EXISTING TO BE REMOVED AND RETURNED TO OWNER
GFI	GROUND FAULT INTERRUPTER
R	EXISTING TO BE RELOCATED
RE	RELOCATED EXISTING, SHOWN IN NEW LOCATION
C.M.	CEILING MOUNTED

NOTES:
1. THE SYMBOLS FOR WORK TO BE DEMOLISHED AND REMOVED ARE THE SAME AS THOSE ABOVE EXCEPT THEY ARE DRAWN WITH A DASHED LINE TYPE.
2. ALL SYMBOLS OR ABBREVIATIONS ARE NOT NECESSARILY USED ON THE CONTRACT DRAWINGS.

FIRE ALARM LEGEND

SYMBOL	DESCRIPTION
1 PP-1	HOME RUN ARROW INDICATES PANEL AND CIRCUIT NUMBER
▼	FIRE FIGHTERS TELEPHONE JACK
F	FIRE ALARM MANUAL PULL STATION
F	FIRE ALARM COMBINATION AUDIBLE/STROBE
F	FIRE ALARM STROBE
S CO	COMBINATION CARBON MONOXIDE/SMOKE DETECTOR
S	DUCT SMOKE DETECTOR
FACP	FIRE ALARM CONTROL PANEL
ER	EXISTING TO BE REMOVED
E	EXISTING DEVICE
N	NEW
TS	TAMPER SWITCH
FS	FLOW SWITCH
WP	WEATHER PROOF
C.M.	CEILING MOUNTED

NOTES:
1. ALL SYMBOLS OR ABBREVIATIONS ARE NOT NECESSARILY USED ON THE CONTRACT DRAWINGS.
2. THE SYMBOLS FOR WORK TO BE DEMOLISHED AND REMOVED ARE THE SAME AS THOSE ABOVE EXCEPT THEY ARE DRAWN WITH A DASHED LINETYPE.

ELECTRICAL GENERAL NOTES

1. ALL ELECTRICAL WORK TO BE INSTALLED IN ACCORDANCE WITH THE 2017 EDITION OF THE NATIONAL ELECTRICAL CODE ADOPTED BY THE UNIFORM CONSTRUCTION CODE - STATE OF NEW JERSEY AND ANY OTHER PARTY HAVING JURISDICTION.
2. ALL ELECTRICAL MATERIALS AND EQUIPMENT FOR THE PROJECT SHALL BE NEW AND APPROVED BY UNDERWRITERS LABORATORY (U.L.) OR ANY OTHER NATIONALLY RECOGNIZED TESTING AGENCY UNLESS NOTED OTHERWISE ON DRAWINGS.
3. ALL NECESSARY PERMITS, INSPECTIONS, AND LICENSES SHALL BE PROCURED AND ALL FEES PAID BY THE CONTRACTOR. SUBMIT TO THE OWNER DUPLICATE CERTIFICATES OF INSPECTION FROM THE APPROVED INSPECTION AGENCY.
4. UPON COMPLETION OF THE WORK, THE ENTIRE WIRING SYSTEM SHALL BE FREE FROM GROUNDS, SHORT CIRCUITS, OPENS, OVERLOADS AND IMPROPER VOLTAGES.
5. PRIOR TO FINAL ACCEPTANCE OF THE WORK, A WRITTEN STATEMENT SHALL BE SUBMITTED TO THE OWNER GUARANTEEING ALL EQUIPMENT AND SYSTEMS AGAINST DEFECTIVE MATERIAL AND WORKMANSHIP FOR ONE (1) YEAR FROM THE DATE OF ACCEPTANCE. UPON NOTICE ALL DEFECTIVE EQUIPMENT, MATERIALS AND SYSTEMS SHALL BE PROMPTLY REPAIRED AT NO EXPENSE TO THE OWNER.
6. THIS SET OF DRAWINGS IS DIAGRAMMATIC IN NATURE AND INDICATES THE GENERAL ARRANGEMENT OF THE VARIOUS SYSTEMS AND APPROXIMATE LOCATIONS OF THE EQUIPMENT. IT SHALL BE THE RESPONSIBILITY OF THE CONTRACTOR TO DETERMINE THAT THERE IS ADEQUATE SPACE AT THE LOCATIONS INDICATED FOR ALL EQUIPMENT PRIOR TO INSTALLATION OF SAME. THE CONTRACTOR SHALL BE RESPONSIBLE TO VERIFY ALL DIMENSIONS IN THE FIELD, PRIOR TO THE COMMENCEMENT OF CONSTRUCTION. BECAUSE OF DIAGRAMMATIC LAYOUT AND SMALL SCALE OF DRAWINGS, NOT ALL CONDUIT, FIXTURES, DEVICES AND RELATED SPECIALTIES ARE INDICATED. PROVIDE ALL SUCH DEVICES AND SPECIALTIES REQUIRED IN SUCH CASES TO INSURE A COMPLETE AND PROPERLY OPERATING INSTALLATION IN ACCORDANCE WITH CODES AND WITHOUT EXTRA COST TO THE OWNER.
7. ELECTRICAL CONTRACTOR SHALL SECURE SHOP DRAWINGS FROM OTHER CONTRACTORS AND VERIFY EXACT ELECTRICAL CHARACTERISTICS OF EQUIPMENT TO BE WIRED PRIOR TO ROUGH-IN. IF DISCREPANCIES ARE NOTED BETWEEN THE ELECTRICAL CONTRACT DRAWINGS AND OTHER CONTRACTOR SHOP DRAWINGS, ELECTRICAL CONTRACTOR IS TO NOTIFY ENGINEER AT ONCE. FAILURE TO PERFORM THIS DUTY WILL NOT RELIEVE THE ELECTRICAL CONTRACTOR OF THE RESPONSIBILITY TO CORRECT WIRING DEFICIENCIES AT NO EXPENSE TO THE OWNER.
8. ALL DEVICES OR EQUIPMENT SHOWN IN SYMBOL FORM SHALL BE WIRED TO ITS RESPECTIVE PANEL.
9. FEEDER AND BRANCH CIRCUIT WIRING SHALL BE COPPER, 600 VOLT CONDUCTOR INSULATION TYPE THHN. THE MINIMUM SIZE 600 VOLT CONDUCTOR SHALL BE #12 AWG FOR POWER AND LIGHTING BRANCH CIRCUIT WIRING. THE MINIMUM SIZE CONDUIT SHALL BE 3/4". ALL CIRCUIT WIRING SIZES LARGER THAN #10 AWG SHALL BE STRANDED AND SMALLER CONDUCTORS SHALL BE SOLID. BRANCH CIRCUITS 100 TO 200 FEET IN LENGTH UTILIZING #12 AWG WIRE SHALL BE INCREASED TO #10 AWG TO THE CENTER OF THE CIRCUIT LOAD AND #12 WIRE TO THE REMAINING DEVICES BEYOND THE LOAD CENTER.
10. ALL INTERIOR WIRING SHALL BE INSTALLED IN ELECTRICAL METALLIC TUBING OR METAL CLAD CABLE AND CONCEALED IN WALLS OR IN HUNG CEILING SPACE. WHERE WIRING CANNOT BE CONCEALED IN FINISHED AREAS, IT SHALL BE RUN EXPOSED IN A NEAT MANNER VIA SURFACE RACEWAY. MINIMUM CONDUIT SIZE SHALL BE 3/4" UNLESS NOTED OTHERWISE.
11. ALL WIRING, CONNECTIONS AND DEVICES SHALL BE PROVIDED TO COMPLY WITH THE GROUNDING REQUIREMENTS OF THE NATIONAL ELECTRICAL CODE AND THE DRAWINGS UNLESS NOTED OTHERWISE. ALL EXPOSED NON-CURRENT CARRYING ELECTRICAL EQUIPMENT METALLIC PARTS, RACEWAY SYSTEMS AND WIRING SYSTEM GROUNDING CONDUCTORS SYSTEM SHALL BE GROUNDED.
12. PROVIDE A SEPARATE, GREEN-COLORED, INSULATED EQUIPMENT GROUNDING CONDUCTOR WITHIN EACH FEEDER AND BRANCH CIRCUIT RACEWAY. THIS CONDUCTOR SHALL BE SEPARATE FROM THE ELECTRICAL SYSTEM NEUTRAL CONDUCTOR. TERMINATE EACH END OF THIS GROUNDING CONDUCTOR ON A U.L. LISTED LUG, BUS OR BUSHING. THE GROUNDING CONDUCTOR SIZE SHALL BE IN ACCORDANCE WITH 2017 NEC, TABLE 250.122.
13. THE ELECTRICAL CONTRACTOR SHALL LABEL WITH PERMANENT MARKER ALL JUNCTION BOXES AND RECEPTACLE OUTLET BOXES WITH CIRCUIT NUMBER AND PANEL IDENTIFICATION.
14. ALL CUTTING AND PATCHING REQUIRED FOR THE ELECTRICAL WORK SHALL BE THE RESPONSIBILITY OF THE ELECTRICAL CONTRACTOR.
15. PANEL BOARD DIRECTORIES SHALL BE TYPED, AND UPDATED INDICATING NEW CIRCUITING AND DEVICE DESCRIPTION AS SHOWN ON DRAWINGS.
16. ALL COMPONENTS OF SYSTEMS REQUIRING TO BE MODIFIED OR EXTENDED SHALL BE INSPECTED AND RETURNED TO A FIRST-CLASS OPERATING CONDITION. COMPONENTS SHALL BE CLEANED AND REPAINTED IF NECESSARY.
17. ALL HOLES OR VOIDS CREATED TO ROUTE CONDUIT OR METAL CLAD CABLE THROUGH FIRE-RATED FLOORS, CEILINGS, AND WALLS SHALL BE PROTECTED WITH A 3-HOUR RATED, APPROVED FIRESTOP SYSTEM EQUAL TO 3M FIRE BARRIER CAULK, PUTTY, STRIP AND SHEET FORM, CAPABLE OF EXPANDING UP TO 8 TO 10 TIMES WHEN EXPOSED TO A TEMPERATURE OF 250 DEGREES FAHRENHEIT AND ABOVE. FIRESTOP SYSTEM SHALL BE INSTALLED IN ACCORDANCE WITH ASME E814 (U.L. 1479) AND 2017 NEC ARTICLE 300.21.
18. A COMPLETE SET OF "AS-BUILT" DRAWINGS, (1) SET IN HARD COPY REPRODUCIBLE AND (1) SET OF ELECTRONIC FILES PRODUCED IN PDF FORMAT SHALL BE FURNISHED TO THE OWNER UPON PROJECT COMPLETION.
19. THE ELECTRICAL WORK RELATING TO THE PROJECT IS SHOWN. OTHER ELECTRICAL AND SYSTEMS COMPONENTS HAVE BEEN LEFT OFF THE DRAWING FOR CLARITY.
20. ALL EQUIPMENT, DEVICES AND CIRCUITS SHALL BE LABELED ACCORDING TO OWNER REQUIREMENTS.
21. THE ELECTRICAL CONTRACTOR SHALL NOT UTILIZE A "COMMON NEUTRAL" ON MULTIPLE BRANCH CIRCUITS. EACH SUCH CIRCUIT SHALL BE RUN WITH ITS OWN DEDICATED NEUTRAL WIRE.
22. ALL LOW-VOLTAGE CABLE SHALL BE PLENUM RATED OR RUN IN CONDUIT. LOW-VOLTAGE CABLE EXPOSED TO PHYSICAL DAMAGE SHALL BE RUN IN CONDUIT. LOW-VOLTAGE CABLE LOCATED ABOVE ACCESSIBLE CEILINGS SHALL BE INDEPENDENTLY SUPPORTED FROM THE STRUCTURE. LOW-VOLTAGE CABLES SHALL NOT BE LAID ON CEILING TILES.
23. ALL WIRING AND EQUIPMENT INSTALLED IN DUCTS, PLENUMS AND OTHER AIR HANDLING SPACES TO CONFORM TO 2017 NEC, ARTICLE 300.22.
24. THE ELECTRICAL CONTRACTOR SHALL ASSURE THAT ANY ELECTRICAL DEVICE OR PRODUCT WHICH IS TO BE RELOCATED, IS IN PROPER WORKING CONDITION IN ACCORDANCE WITH INSTRUCTIONS INCLUDED IN ITS LISTING OR LABELING. ANY DEVICE OR PRODUCT FOUND TO BE DEFECTIVE OR DAMAGED SHALL BE REPLACED WITH NEW.
25. SITE VISIT PRIOR TO BID SUBMISSION:
    A. PRIOR TO BID SUBMISSION, THE ELECTRICAL CONTRACTOR SHALL VISIT THE SITE AND BECOME FAMILIAR WITH EXISTING CONDITIONS. BIDS AS SUBMITTED WILL BE INTERPRETED TO INCLUDE ALL COSTS AND CHARGES MADE NECESSARY BY EXISTING CONDITIONS.
    B. ELECTRICAL CONTRACTOR SHALL VERIFY THE SIZE, LOCATION AND ELEVATION OF ALL SERVICES IN THE FIELD AFFECTED BY THIS WORK BEFORE PROCEEDING WITH CONSTRUCTION. NOTIFY THE CONSTRUCTION MANAGER IMMEDIATELY IN THE EVENT OF EXISTING UTILITIES VARY APPRECIABLY FROM THOSE SHOWN ON DRAWINGS.
26. WHERE CONDUIT RUNS CROSS STRUCTURAL EXPANSION JOINTS, LIQUID-TIGHT FLEXIBLE METAL CONDUIT SHALL BE USED TO TRANSITION CONDUIT SYSTEM FROM ONE STRUCTURAL SECTION TO THE OTHER.
27. WHERE CIRCUIT BREAKERS OR FUSES ARE APPLIED IN COMPLIANCE WITH THE SERIES COMBINATION RATINGS MARKED ON THE EQUIPMENT BY THE MANUFACTURER, THE EQUIPMENT ENCLOSURE(S) SHALL BE LEGIBLY MARKED IN THE FIELD TO INDICATE THE EQUIPMENT HAS BEEN APPLIED WITH A SERIES COMBINATION DEVICE RATING. THE MARKING SHALL BE READILY VISIBLE AND CONFORM TO ARTICLE 110.22 OF THE 2017 EDITION OF THE NATIONAL ELECTRICAL CODE.
28. CONTRACTOR TO PROVIDE RECEPTACLES TO MATCH PLUGS FURNISHED WITH EQUIPMENT.
29. ELECTRICAL CONTRACTOR SHALL COORDINATE PLACEMENT OF ALL ELECTRICAL DEVICES WITH OWNER AND ARCHITECT PRIOR TO ROUGH-IN.

ELECTRICAL DEMOLITION NOTES

1. IT IS THE INTENT THAT ALL EXISTING CONDUIT, CONDUCTORS, FIXTURES AND OTHER EQUIPMENT AND MATERIALS THAT INTERFERE WITH THE ALTERED EXISTING BUILDING ARRANGEMENTS AND NEW SYSTEMS BE REMOVED, RELOCATED, REROUTED OR ABANDONED. THE DRAWINGS GENERALLY INDICATE MAJOR ITEMS OF EXISTING MATERIALS AND EQUIPMENT THAT ARE TO BE REMOVED, RELOCATED, REROUTED OR ABANDONED. IT IS NOT POSSIBLE TO INDICATE ALL RELATED ACCESSORIES, SPECIALTIES AND OTHER MINOR ITEMS. HOWEVER, THEIR REMOVAL, RELOCATIONS, REROUTING OR ABANDONMENT SHALL ALSO BE INCLUDED IN THIS CONTRACT AND SHALL BE DONE AT NO ADDITIONAL COST TO THE OWNER.
2. EXISTING CONCEALED AND EXPOSED EQUIPMENT AND MATERIALS THAT WILL BECOME ABANDONED DUE TO NEW WORK SHALL BE REMOVED BACK TO THE PANEL.
3. ALL EXISTING ELECTRICAL DEVICES TO BE DEMOLISHED MAY NOT BE SHOWN. CONTRACTOR SHALL DURING PRE-BID SITE VISIT DETERMINE EXTENT OF DEMOLITION AND INCLUDE COST OF THIS WORK IN BID. SHOULD A CONTRACTOR REQUIRE REMOVAL, RELOCATION OR REROUTING OF ANOTHER TRADE'S WORK THAT IS NOT INDICATED ON DRAWINGS, THE CONTRACTOR REQUIRING SUCH WORK SHALL BE RESPONSIBLE FOR THAT WORK, AND PAY ALL REQUIRED COSTS. ALL UNKNOWN BELOW SLAB CONDUIT ENCOUNTERED DURING INSTALLATION OF NEW WORK SHALL BE CAPPED OFF AT ACTIVE MAIN OR BRANCH. ALLOWANCE SHALL BE MADE FOR THESE ITEMS IN BID PRICE.
4. EXISTING EQUIPMENT AND MATERIALS THAT ARE TO REMAIN, BUT BECOME EXPOSED DUE TO NEW WORK, SHALL BE RELOCATED AND RECONNECTED AS DIRECTED BY OWNER.
5. ALL WORK INVOLVING ALTERATIONS TO EXISTING SYSTEMS, EQUIPMENT AND MATERIALS SHALL BE REVIEWED WITH ARCHITECT AND OWNER BEFORE BEGINNING WORK.
6. REMOVED EQUIPMENT AND MATERIALS NOT DESIRED BY OWNER SHALL BECOME PROPERTY OF CONTRACTOR AND SHALL BE PROMPTLY REMOVED FROM SITE. EQUIPMENT AND MATERIALS DESIRED BY OWNER SHALL BE DELIVERED BY CONTRACTOR TO AN ON-SITE STORAGE LOCATION DESIGNATED BY OWNER.
7. THE CONTRACTOR MUST SURVEY AND VERIFY LOCATIONS AND PHYSICAL SIZES OF ALL EXISTING ITEMS AND DETERMINE WHETHER RELOCATION OR REROUTING WILL BE REQUIRED. IF RELOCATION OR REROUTING IS REQUIRED, INCLUDING THAT OF ALL RELATED ACCESSORIES, SPECIALTIES AND OTHER MINOR ITEMS, THE CONTRACTOR SHALL INCLUDE ALL NECESSARY WORK AS PART OF HIS CONTRACT AND IT SHALL BE DONE AT NO ADDITIONAL COST TO THE OWNER.
8. WORK SHALL BE PERFORMED BY MECHANICS SKILLED IN PARTICULAR TRADE INVOLVED, THAT IS, PLUMBING WORK SHALL BE PERFORMED BY PLUMBERS, ELECTRICAL WORK SHALL BE PERFORMED BY ELECTRICIANS, MECHANICAL WORKED PERFORMED BY STEAM FITTERS AND SHEET METAL MECHANICS.
9. ALL WORK SHALL BE INSPECTED, TESTED AND APPROVED BY THE PROPER AUTHORITIES HAVING JURISDICTION. CERTIFIED COPIES OF THESE APPROVALS SHALL BE DELIVERED TO THE OWNER BEFORE FINAL PAYMENT.
10. ALL CUTTING AND PATCHING REQUIRED FOR THE ELECTRICAL DEMOLITION WORK SHALL BE THE RESPONSIBILITY OF THE ELECTRICAL CONTRACTOR.
11. ALL COMPONENTS OF EXISTING SYSTEMS REQUIRED TO BE MODIFIED, EXTENDED OR REUSED SHALL BE INSPECTED AND RETURNED TO A FIRST-CLASS OPERATING CONDITION. COMPONENTS SHALL BE CLEANED AND REPAINTED IF NECESSARY.
12. ALL DEMOLISHED MATERIALS SHALL BE CAREFULLY REMOVED FROM THE PREMISES BY THE MOST DIRECT PATH. ANY DAMAGE INCURRED BY THE REMOVAL PROCESS SHALL BE REPAIRED TO MATCH THE SURROUNDING WORK AND LEFT IN SATISFACTORY CONDITION. ALL AREAS SHALL BE CLEANED OF ALL DIRT AND DEBRIS RESULTING FROM DEMOLITION.
13. ALL HOLES OR VOIDS CREATED TO ROUTE CONDUIT OR METAL CLAD CABLE THROUGH FIRE RATED FLOORS AND WALLS SHALL BE SEALED WITH AN INTUMESCENT MATERIAL CAPABLE OF EXPANDING UP TO 8 TO 10 TIMES WHEN EXPOSED TO A TEMPERATURE OF 250 DEGREES FAHRENHEIT AND ABOVE. ACCEPTABLE SEALING MATERIAL SUCH AS 3M FIRE BARRIER CAULK, PUTTY, STRIP AND SHEET FORM SHALL HAVE I.C.B.O. AND BOCA APPROVED RATING OF 3 HOURS PER ASTM E-814 (U.L. 1479).

FIRE ALARM GENERAL NOTES

1. THE FIRE ALARM SYSTEM INSTALLATION SHALL COMPLY WITH ALL APPLICABLE FEDERAL, STATE AND LOCAL CODE REQUIREMENTS AND ANY OTHER PARTY HAVING JURISDICTION, INCLUDING 2016 EDITION OF NFPA 72 AS ADOPTED BY THE STATE OF NEW JERSEY.
2. ALL NEW FIRE ALARM EQUIPMENT FOR THE PROJECT SHALL BE APPROVED BY UNDERWRITERS LABORATORY (U.L) OR ANY OTHER NATIONALLY RECOGNIZED TESTING AGENCY UNLESS NOTED OTHERWISE ON DRAWINGS.
3. ALL NECESSARY PERMITS, INSPECTIONS AND FEES SHALL BE PROCURED BY THE CONTRACTOR.
4. UPON COMPLETION OF THE WORK, THE ENTIRE WIRING SYSTEM SHALL BE FREE FROM GROUNDS, SHORT CIRCUITS, OPENS, OVERLOADS AND IMPROPER VOLTAGES.
5. PRIOR TO FINAL ACCEPTANCE OF THE WORK, A WRITTEN STATEMENT SHALL BE SUBMITTED TO THE OWNER GUARANTEEING ALL EQUIPMENT AND SYSTEMS AGAINST DEFECTIVE MATERIAL AND WORKMANSHIP FOR ONE (1) YEAR FROM THE DATE OF ACCEPTANCE. UPON NOTICE ALL DEFECTIVE EQUIPMENT, MATERIALS AND SYSTEMS SHALL BE PROMPTLY REPAIRED AT NO EXPENSE TO THE OWNER.
6. THIS SET OF DRAWINGS IS DIAGRAMMATIC IN NATURE AND INDICATES THE GENERAL ARRANGEMENT OF THE SYSTEM AND APPROXIMATE LOCATIONS OF THE EQUIPMENT. IT SHALL BE THE RESPONSIBILITY OF THE CONTRACTOR TO DETERMINE THAT THERE IS ADEQUATE SPACE AT THE LOCATIONS INDICATED FOR ALL EQUIPMENT PRIOR TO INSTALLATION OF SAME. THE CONTRACTOR SHALL BE RESPONSIBLE TO VERIFY ALL DIMENSIONS IN THE FIELD, PRIOR TO THE COMMENCEMENT OF CONSTRUCTION.
7. FIRE ALARM CONTRACTOR SHALL SECURE SHOP DRAWINGS FROM OTHER CONTRACTORS AND VERIFY EXACT ELECTRICAL CHARACTERISTICS OF EQUIPMENT TO BE WIRED PRIOR TO ROUGH-IN. IF DISCREPANCIES ARE NOTED BETWEEN THE FIRE ALARM CONTRACT DRAWINGS AND OTHER CONTRACTOR SHOP DRAWINGS, FIRE ALARM CONTRACTOR IS TO IMMEDIATELY NOTIFY ARCHITECT AND ENGINEER. FAILURE TO PERFORM THIS DUTY WILL NOT RELIEVE THE FIRE ALARM CONTRACTOR OF THE RESPONSIBILITY TO CORRECT WIRING DEFICIENCIES AT NO ADDITIONAL EXPENSE TO THE OWNER.
8. ALL DEVICES OR EQUIPMENT SHOWN IN SYMBOL FORM SHALL BE WIRED TO ITS RESPECTIVE PANEL.
9. ALL WIRING, CONNECTIONS AND DEVICES SHALL BE PROVIDED TO COMPLY WITH THE GROUNDING REQUIREMENTS OF THE NATIONAL ELECTRICAL CODE AND THE DRAWINGS UNLESS NOTED OTHERWISE. ALL EXPOSED NON-CURRENT CARRYING ELECTRICAL EQUIPMENT METALLIC PARTS, RACEWAY SYSTEMS AND WIRING SYSTEM GROUNDING CONDUCTORS SYSTEM SHALL BE GROUNDED.
10. THE FIRE ALARM CONTRACTOR SHALL PAINT RED IN COLOR ALL JUNCTION BOXES AND CONDUIT ASSOCIATED WITH THE FIRE ALARM SYSTEM. LABEL WITH PERMANENT MARKER ALL JUNCTION BOXES AND OUTLET BOXES WITH CIRCUIT NUMBER, PANEL IDENTIFICATION OR ADDRESS AS REQUIRED.
11. ALL CUTTING AND PATCHING REQUIRED FOR THE FIRE ALARM WORK SHALL BE THE RESPONSIBILITY OF THE FIRE ALARM CONTRACTOR.
12. ALL HOLES OR VOIDS CREATED TO ROUTE CONDUIT THROUGH FIRE RATED FLOORS AND WALLS SHALL BE SEALED WITH AN INTUMESCENT MATERIAL CAPABLE OF EXPANDING UP TO 8 TO 10 TIMES WHEN EXPOSED TO A TEMPERATURE OF 250 DEGREES FAHRENHEIT AND ABOVE. ACCEPTABLE SEALING MATERIAL SUCH AS 3M FIRE BARRIER CAULK, PUTTY, STRIP AND SHEET FORM SHALL HAVE I.C.B.O. AND BOCA APPROVED RATING OF 3 HOURS PER ASTM E-814 (U.L. 1479) AS PER NEC ART. 300-21.
13. A COMPLETE SET OF "AS-BUILT" DRAWINGS, (1) SET IN HARD COPY REPRODUCIBLE AND (1) SET OF ELECTRONIC FILES PRODUCED IN PDF FORMAT SHALL BE FURNISHED TO THE OWNER UPON PROJECT COMPLETION.
14. ALL EQUIPMENT, DEVICES AND CIRCUITS SHALL BE LABELED ACCORDING TO OWNER REQUIREMENTS. PRIOR TO LABELING AND IDENTIFICATION OF ALL EQUIPMENT, DEVICES AND CIRCUITS, CONTRACTOR SHALL BE RESPONSIBLE TO COORDINATE THESE REQUIREMENTS WITH THE OWNER.
15. ALL LOW-VOLTAGE FIRE ALARM CABLE SHALL BE INDEPENDENTLY SUPPORTED FROM THE STRUCTURE. CABLES SHALL NOT BE LAID ON CEILING PANELS.
16. ALL WIRING AND EQUIPMENT INSTALLED IN DUCTS, PLENUMS AND OTHER AIR HANDLING SPACES SHALL CONFORM TO NEC, ARTICLE 300-22.
17. DO NOT INSTALL ANY FIRE ALARM CONDUCTORS IN OR CLOSE TO THE SAME RACEWAY WITH A.C. CURRENT CARRYING CONDUCTORS.
18. DETECTORS SHALL NOT BE INSTALLED UNTIL AFTER THE CONSTRUCTION CLEAN-UP IS COMPLETE AND FINAL. DETECTORS THAT HAVE BEEN INSTALLED PRIOR TO FINAL CLEAN-UP BY ALL TRADES SHALL BE CLEANED OR REPLACED.
19. ALL FIRE ALARM CABLING SHALL BE "FPLP" RATED OR RUN IN A MINIMUM 3/4" CONDUIT. ALL EXPOSED LINE AND LOW-VOLTAGE CABLE SHALL BE INSTALLED IN RIGID GALVANIZED STEEL CONDUIT.
20. CONTRACTOR SHALL UPGRADE EXISTING FIRE ALARM SYSTEM'S GRAPHICS TO INCLUDE ALL NEW FIRE ALARM DEVICES.
21. NO CHANGES SHALL BE MADE TO THE FACILITY'S EXISTING FIRE ALARM SYSTEM'S POSITIVE ALARM SEQUENCE OF OPERATIONS. ALL NEW AND RELOCATED FIRE ALARM DEVICES SHALL BE WIRED AND PROGRAMMED TO ACTIVATE AND SIGNAL IN FULL COMPLIANCE WITH THE CASINO'S EXISTING FIRE ALARM SEQUENCE OF OPERATIONS.
22. ALL WIRING SHALL COMPLY WITH PROJECT SPECIFICATIONS, 2017 NEC, 2016 NFPA 72, 2018 IBC (NEW JERSEY EDITION), ADAAG, UL 1971, AND THE REQUIREMENTS OF THE LOCAL AUTHORITIES HAVING JURISDICTION. ALL EXPOSED WIRING OR WIRING INSTALLED IN LOCATIONS SUBJECT TO DAMAGE SHALL BE INSTALLED IN METAL RACEWAY PAINTED RED. ALL WIRING AND RACEWAYS SHALL BE INSTALLED IN A NEAT AND PROFESSIONAL MANNER.
23. ALL WIRE AND CABLE SHALL HAVE A WIRE MARKER ON EACH END, OR EQUAL. ALL MARKERS SHALL BE TYPED. SHIELDS ON ALL SHIELDED CABLE SHALL BE CONTINUOUS, GROUNDED AT THE FIRE ALARM CONTROL PANEL ONLY, AND ISOLATED FROM GROUND ELSEWHERE.
24. FIRE ALARM CONTRACTOR SHALL BE RESPONSIBLE FOR ALL CUTTING PATCHING AND PAINTING REQUIRED FOR COMPLETE FIRE ALARM SYSTEM INSTALLATION.
25. MOUNTING FOR ALL DEVICES SHALL COMPLY WITH ALL NEW JERSEY ADOPTED STANDARDS LISTED IN THE IBC, NFPA 90A, NFPA 72, NEC, AND ADAAG.
26. FOR CONDUIT APPLICATIONS, USE ELECTRICAL METALLIC TUBING (EMT) AT ALL INDOOR LOCATIONS.. ALL CONDUIT SIZE SHALL BE 3/4" MINIMUM.
27. FIRE ALARM CONTRACTOR SHALL REPAIR/PATCH AND /OR REPAINT TO MATCH ADJACENT AREAS, ANY AREAS DAMAGED BY WORK OF THIS CONTRACT.
28. FIRE ALARM CONTRACTOR SHALL BE RESPONSIBLE FOR PROVIDING ALL PROGRAMMING NECESSARY FOR THIS PROJECT, AND SHALL BE PERFORMED BY A TECHNICIAN CERTIFIED BY THE FIRE ALARM SYSTEM'S MANUFACTURER TO PERFORM THIS WORK.

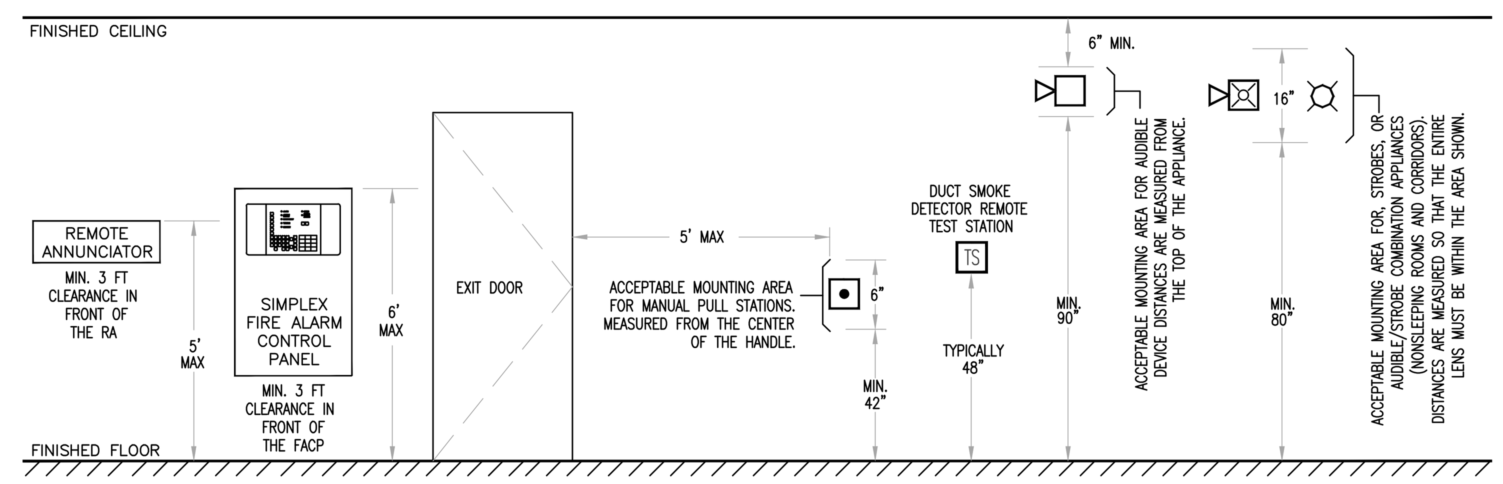

FIRE ALARM EQUIPMENT MOUNTING HEIGHTS DIMENSIONS

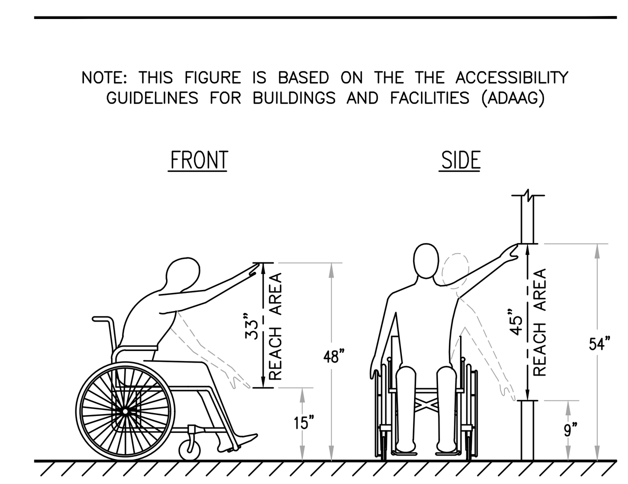

WHEELCHAIR ACCESSIBILITY DIMENSIONS

HARMONIZED FIRE ALARM EQUIPMENT MOUNTING DISTANCE REQUIREMENTS – IBC/ADA/NFPA/ANSI

NOT TO SCALE--FOR INSTALLER'S REFERENCE

EXISTING PANEL "F" SECTION 2

MAINS: 250A M.C.B. — FED FROM: EXISTING
VOLTAGE: 240V, 1Φ, 3W — FEEDER: EXISTING

CONDUIT	WIRE SIZE	SERVICE TO:	KW/PHASE A	KW/PHASE B	CIRCUIT BREAKER AMP	P	NO.	Φ	NO.	P	CIRCUIT BREAKER AMP	KW/PHASE A	KW/PHASE B	SERVICE TO:	WIRE SIZE	CONDUIT
		EXISTING LOAD			20	1	43	B	44	1	20			EXISTING LOAD		
		EXISTING LOAD			20	1	45	A	46	1	20			EXISTING LOAD		
		EXISTING LOAD			20	1	47	B	48	1	20			EXISTING LOAD		
		EXISTING LOAD			20	1	49	A	50	1	20			EXISTING LOAD		
		EXISTING LOAD			20	1	51	B	52	1	20			EXISTING LOAD		
		EXISTING LOAD			20	1	53	A	54	1	20			EXISTING LOAD		
		EXISTING LOAD			20	1	55	B	56	1	20			EXISTING LOAD		
		EXISTING LOAD			20	1	57	A	58	1	20			EXISTING LOAD		
		EXISTING LOAD			20	1	59	B	60	2	20			EXISTING LOAD		
		EXISTING LOAD			20	1	61	A	62	▼	▼			▼		
		EXISTING LOAD			20	1	63	B	64	2	20			EXISTING LOAD		
3/4"	2#12 & 1#12 GRD	STORAGE 109 RECEPTACLES		0.54	*20	1	65	A	66	▼	▼			▼		
3/4"	2#12 & 1#12 GRD	STORAGE 108 RECEPTACLES	0.54		*20	1	67	B	68	1	20			EXISTING LOAD		
3/4"	2#12 & 1#12 GRD	STORAGE 107 RECEPTACLES		0.90	*20	1	69	A	70	1	20			EXISTING LOAD		
3/4"	2#12 & 1#12 GRD	ROOF CONV. RECEPTACLE	0.18		*20	1	71	B	72	1	30			EXISTING LOAD		
							73	A	74	2	20			EXISTING LOAD		
							75	B	76	▼	▼			▼		
							77	A	78					SPACE		
							79	B	80					SPACE		
							81	A	82					SPACE		
							83	B	84					SPACE		

LOAD SUMMARY:
ON 05/10/2022 THE LOAD ON THIS EXISTING PANEL WAS MEASURED BY PHASE AS FOLLOWS:
AΦ = 43.1 AMPS
BΦ = 37.5 AMPS
NEUTRAL = 4.8 AMPS

WITH THE ADDED NEW LOAD TO THE EXISTING MEASURED LOADS, THE TOTAL ESTIMATED LOADS ON THIS PANEL BY PHASE ARE:
AΦ = 49.1 AMPS
BΦ = 49.5 AMPS

*INDICATES NEW CIRCUIT BREAKER. E.C. SHALL PROVIDE NEW CIRCUIT BREAKER TO MATCH EXISTING TYPE AND AIC RATING

EXISTING PANEL "H"

MAINS: 300A M.C.B. — FED FROM: EXISTING
VOLTAGE: 208/120V, 1Φ, 3W, — FEEDER: EXISTING

CONDUIT	WIRE SIZE	SERVICE TO:	KW/PHASE A	KW/PHASE B	CIRCUIT BREAKER AMP	P	NO.	Φ	NO.	P	CIRCUIT BREAKER AMP	KW/PHASE A	KW/PHASE B	SERVICE TO:	WIRE SIZE	CONDUIT
		EXISTING LOAD			70	2	1	A	2	2	20			EXISTING LOAD		
		▼			▼	▼	3	B	4	▼	▼			▼		
		EXISTING LOAD			70	2	5	A	6	2	45			EXISTING LOAD		
		▼			▼	▼	7	B	8	▼	▼			▼		
1"	3#6 & 1#10 GRD	RTU-2	3.57		*60	2	9	A	10	2	30			EXISTING LOAD		
▼	▼	▼		3.57	▼	▼	11	B	12	▼	▼			▼		
		EXISTING LOAD			30	1	13	A	14	1	20			EXISTING LOAD		
		EXISTING LOAD			20	1	15	B	16	1	20			EXISTING LOAD		
		EXISTING LOAD			30	2	17	A	18	1	20			EXISTING LOAD		
		▼			▼	▼	19	B	20	1	20			EXISTING LOAD		
		EXISTING LOAD			20	1	21	A	22	1	20			EXISTING LOAD		
3/4"	2#12 & 1#12 GRD	STORAGE LTG		0.85	20	1	23	B	24	1	20			EXISTING LOAD		

LOAD SUMMARY:
ON 05/10/2022 THE LOAD ON THIS EXISTING PANEL WAS MEASURED BY PHASE AS FOLLOWS:
AΦ = 86.7 AMPS
BΦ = 94.6 AMPS
NEUTRAL = 6.1 AMPS

WITH THE ADDED NEW LOAD TO THE EXISTING MEASURED LOADS, THE TOTAL ESTIMATED LOADS ON THIS PANEL BY PHASE ARE:
AΦ = 116.5 AMPS
BΦ = 131.4 AMPS

*INDICATES NEW CIRCUIT BREAKER. E.C. SHALL PROVIDE NEW CIRCUIT BREAKER TO MATCH EXISTING TYPE AND AIC RATING

SOSH
- atlantic city, NJ - philadelphia, PA -

CONCORD ENGINEERING
www.concord-engineering.com
2311 Atlantic Avenue
Atlantic City, New Jersey 08401
(609) 272-9620

Anthony H. Caucci
Professional Engineer
New Jersey Lic. # 44806

ATLANTIC COUNTY VOTING MACHINE WAREHOUSE ALTERATION

235 DOLPHIN AVENUE
NORTHFIELD, NJ 08225

SUBMISSIONS

NO.	DATE:	DESCRIPTION:
	05/20/2022	CONSTRUCTION DOCUMENTS

DRAWING TITLE:
ELECTRICAL NOTES, LEGEND, SYMBOLS & SCHEDULES

DRAWN BY: DS
REVIEWED BY: EJT
PROJECT NO. 22013.00.001
DRAWING NO. E-001

DEMOLITION GENERAL NOTES:

1. CONDUCT DEMOLITION IN A MANNER WHICH MAINTAIN ELECTRIC SERVICE THROUGHOUT ALL AREAS OTHER THAN CONSTRUCTION AREAS THROUGHOUT THE DURATION OF WORK.
2. PERFORM DEMOLITION IN AN ORDERLY, CAREFUL AND WORKMANLIKE MANNER. PROTECT EXISTING CONSTRUCTION NOT SHOW TO BE DEMOLISHED AND/OR REMOVED.
3. REMOVE MATERIALS, FIXTURES, DEVICES, ETC.., WHICH ARE TO BE REINSTALLED OR RETAINED IN A MANNER TO PREVENT DAMAGE. TEMPORARILY REMOVE AND STORE OFFSITE AS NECESSARY.
4. OWNER SHALL HAVE FIRST REFUSAL OF ANY MATERIAL, FIXTURE, DEVICE, MISCELLANEOUS ACCESSORIES, APPLIANCES, AND OTHER MISCELLANEOUS ITEMS THAT ARE SCHEDULED FOR REMOVAL. CONTRACTOR SHALL COORDINATE WITH OWNER TO REVIEW AREAS OF REMOVALS AND IDENTIFY AND SUCH ARTICLES WHICH SHALL BE REMOVED AND RETURNED TO THE OWNER. THE OWNER SHALL DESIGNATE A STORAGE AREA FOR THOSE ITEMS BEING SAVED FOR THE OWNER.
5. PROTECT ALL EXISTING ELECTRICAL, COMMUNICATIONS, FIRE ALARM, IT, A/V, CONTROL SYSTEMS, ETC., DURING CONSTRUCTION TO PREVENT INTERRUPTIONS OF THESE SYSTEMS DURING CONSTRUCTION.
6. UNLESS NOTED OTHERWISE, ALL DEMOLISHED AND REMOVED FIXTURES, DEVICES, EQUIPMENT, ETC., SHALL HAVE THEIR BACK-BOXES AND WIRING REMOVED, AND THEIR AFFECTED WALLS AND CEILINGS PATCH AND REPAIRED TO MATCH NEW FINISHES. NO BLANK COVER PLATES WILL BE ACCEPTABLE. REWIRE ALL EXISTING, RELOCATED AND NEW ELECTRICAL FIXTURES AND DEVICES AS NECESSARY.
7. PATCH AND REPAIR ALL EXISTING SURFACES AND ITEMS ADJACENT TO DEMOLITION WHICH HAS BEEN DAMAGED OR MARRED DUE TO DEMOLITION AND OR NEW CONSTRUCTION.
8. CONTRACTOR MAY REUSE WIRING, CONDUIT, ELECTRICAL BOXES, ETC., WHICH ARE IN GOOD, CODE-COMPLIANT CONDITION.

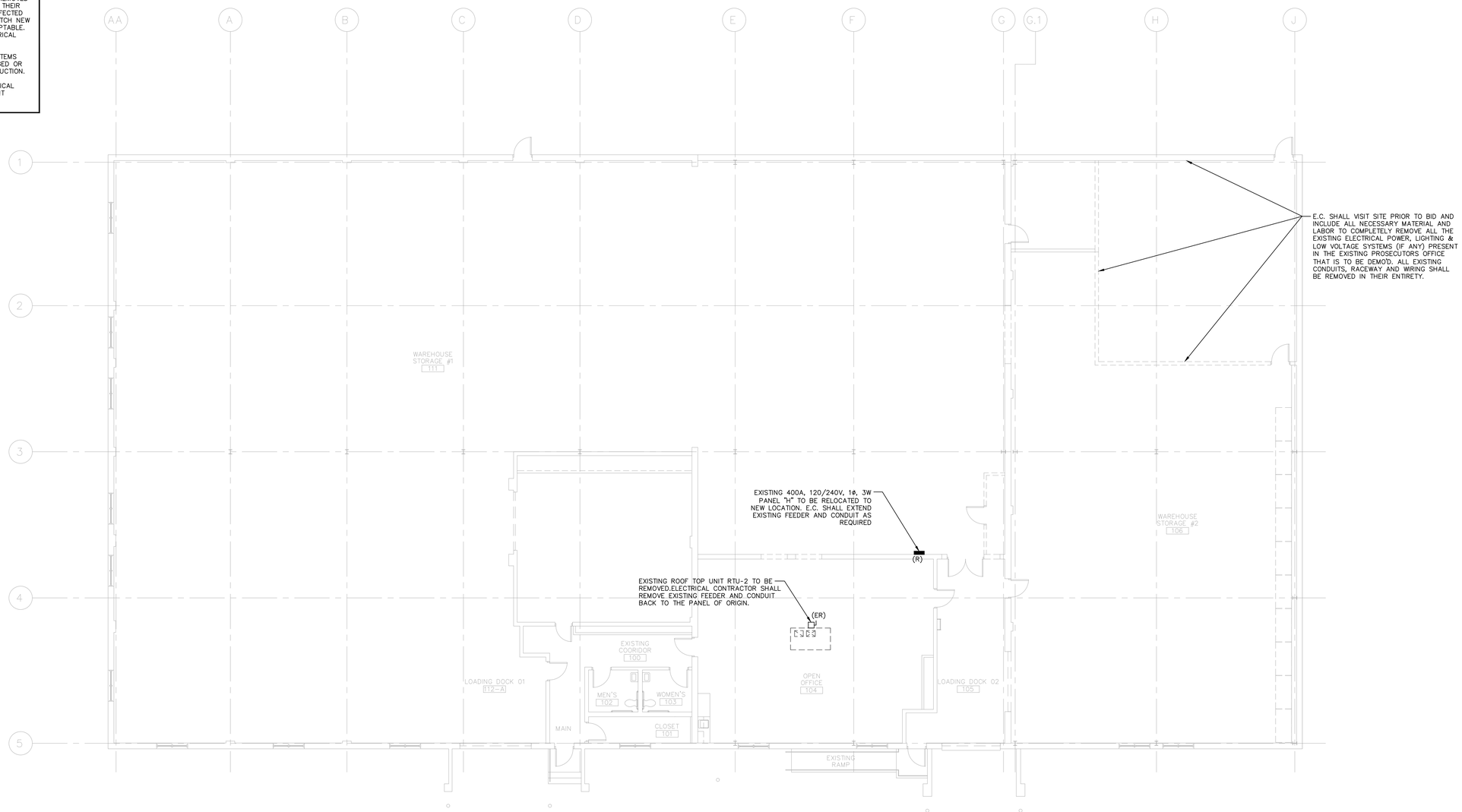

1 ED-100 ELECTRICAL POWER DEMOLITION PLAN
SCALE: 1/8" = 1'-0"

SOSH
- atlantic city, NJ - philadelphia, PA -

CONCORD ENGINEERING
www.concord-engineering.com
2311 Atlantic Avenue
Atlantic City, New Jersey 08401
(609) 272-9620

Anthony H. Caucci
Professional Engineer
New Jersey Lic. # 44806

ATLANTIC COUNTY VOTING MACHINE WAREHOUSE ALTERATION

235 DOLPHIN AVENUE
NORTHFIELD, NJ 08225

SUBMISSIONS

NO.	DATE:	DESCRIPTION:
	05/20/2022	CONSTRUCTION DOCUMENTS

DRAWING TITLE:
ELECTRICAL POWER DEMOLITION PLAN

DRAWN BY: DS
REVIEWED BY: EJT
PROJECT NO. 22013.00.001
DRAWING NO. ED-100

DEMOLITION GENERAL NOTES:

1. PERFORM DEMOLITION IN AN ORDERLY, CAREFUL AND WORKMANLIKE MANNER. PROTECT EXISTING CONSTRUCTION NOT SHOW TO BE DEMOLISHED AND/OR REMOVED.
2. REMOVE MATERIALS, FIXTURES, DEVICES, ETC.., WHICH ARE TO BE REINSTALLED OR RETAINED IN A MANNER TO PREVENT DAMAGE. TEMPORARILY REMOVE AND STORE OFFSITE AS NECESSARY.
3. OWNER SHALL HAVE FIRST REFUSAL OF ANY MATERIAL, FIXTURE, DEVICE, MISCELLANEOUS ACCESSORIES, APPLIANCES, AND OTHER MISCELLANEOUS ITEMS THAT ARE SCHEDULED FOR REMOVAL. CONTRACTOR SHALL COORDINATE WITH OWNER TO REVIEW AREAS OF REMOVALS AND IDENTIFY AND SUCH ARTICLES WHICH SHALL BE REMOVED AND RETURNED TO THE OWNER. THE OWNER SHALL DESIGNATE A STORAGE AREA FOR THOSE ITEMS BEING SAVED FOR THE OWNER.
4. PROTECT ALL EXISTING ELECTRICAL, COMMUNICATIONS, IT, A/V, CONTROL SYSTEMS, ETC., DURING CONSTRUCTION TO PREVENT INTERRUPTIONS OF THESE SYSTEMS DURING CONSTRUCTION.
5. UNLESS NOTED OTHERWISE, ALL DEMOLISHED AND REMOVED FIXTURES, DEVICES, EQUIPMENT, ETC., SHALL HAVE THEIR BACK-BOXES AND WIRING REMOVED, AND THEIR AFFECTED WALLS AND CEILINGS PATCH AND REPAIRED TO MATCH NEW FINISHES. NO BLANK COVER PLATES WILL BE ACCEPTABLE. REWIRE ALL EXISTING, RELOCATED AND NEW ELECTRICAL FIXTURES AND DEVICES AS NECESSARY.
6. PATCH AND REPAIR ALL EXISTING SURFACES AND ITEMS ADJACENT TO DEMOLITION WHICH HAS BEEN DAMAGED OR MARRED DUE TO DEMOLITION AND OR NEW CONSTRUCTION.

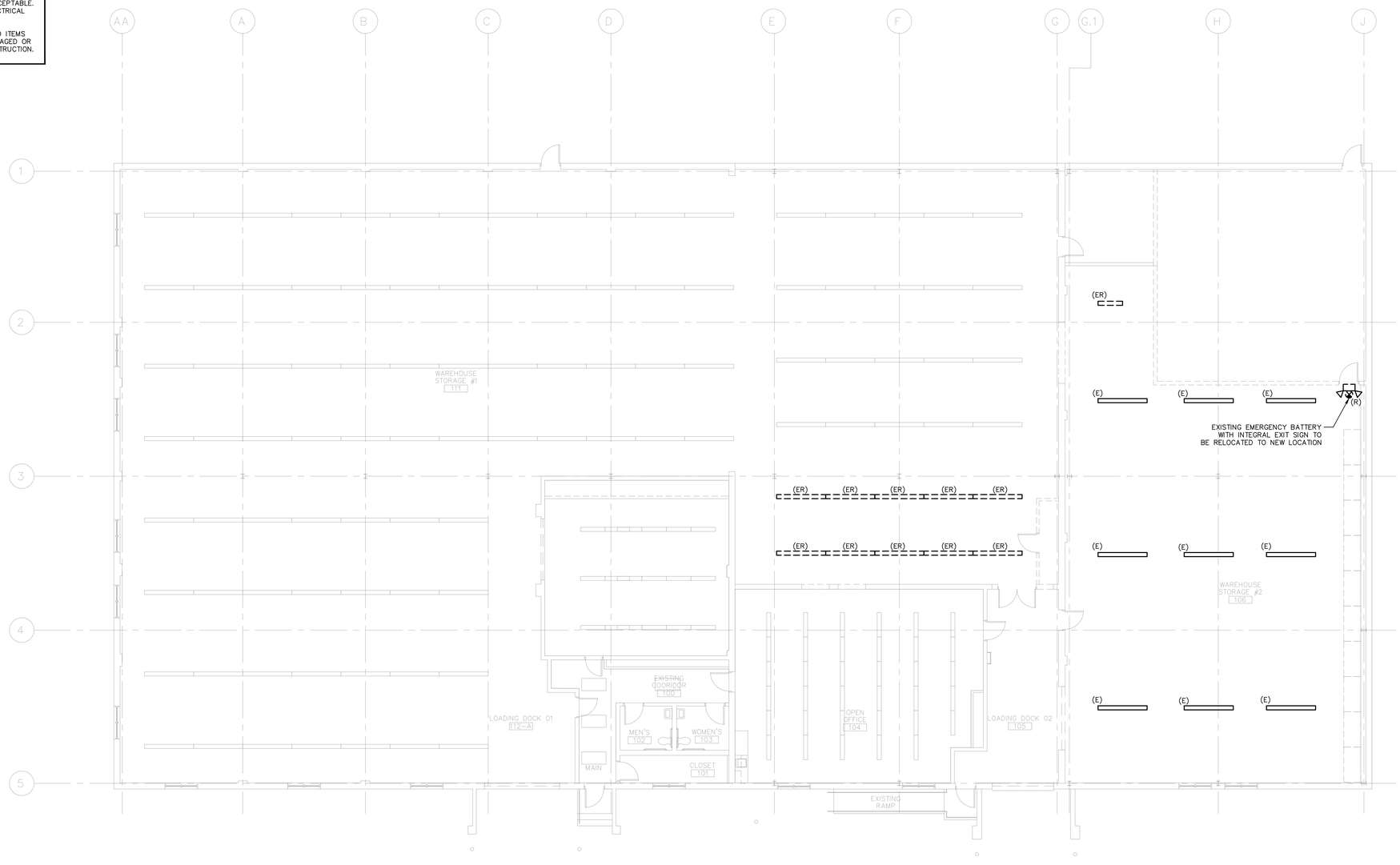

1 / ED-200 ELECTRICAL LIGHTING DEMOLITION PLAN
SCALE: 1/8" = 1'-0"

SOSH
- atlantic city, NJ - philadelphia, PA -

CONCORD ENGINEERING
www.concord-engineering.com
2311 Atlantic Avenue
Atlantic City, New Jersey 08401
(609) 272-9620

Anthony H. Caucci
Professional Engineer
New Jersey Lic. # 44806

ATLANTIC COUNTY VOTING MACHINE WAREHOUSE ALTERATION

235 DOLPHIN AVENUE
NORTHFIELD, NJ 08225

SUBMISSIONS

NO.	DATE:	DESCRIPTION:
	05/20/2022	CONSTRUCTION DOCUMENTS

DRAWING TITLE:
ELECTRICAL LIGHTING DEMOLITION PLAN

DRAWN BY: DS
REVIEWED BY: EJT
PROJECT NO. 22013.00.001
DRAWING NO. ED-200

NEW WORK GENERAL NOTES:

1. VERIFY ALL DIMENSIONS AND CONDITIONS IN FIELD.
2. COORDINATE WORK WITH ALL OTHER TRADES.
3. REFER TO ARCHITECTURAL AND INTERIOR DESIGN DRAWINGS FOR EXACT LOCATIONS AND ELEVATIONS OF ALL NEW FIXTURES AND DEVICES.
4. NOTIFY ARCHITECT AND ENGINEER OF ANY DISCREPANCIES OR DEVIATIONS TO THE LAYOUTS SHOWN.
5. CONTRACTOR SHALL COORDINATE AND INSTALL ALL OWNER-SUPPLIED FIXTURES, DEVICES, ETC., EXCEPT AS NOTED OTHERWISE.
6. CONTRACTOR SHALL PROVIDE ALL NECESSARY BACKING PLATES OR SOLID BLOCKING IN ALL PARTITIONS AND WALLS WHICH RECEIVE ANY WALL-MOUNTED ITEMS.
7. ELECTRICAL CONTRACTOR SHALL PROVIDE ALL CONDUIT, BACKBOXES, WIRING, ETC. AS REQUIRED UNLESS OTHERWISE NOTED.
8. CONTRACTOR SHALL PROVIDE ALL WIRE AND CONNECTORS, AND LABEL, TERMINATE, AND TEST ALL NEW AND RE-UTILIZED LOW VOLTAGE CABLES UNLESS OTHERWISE NOTED.

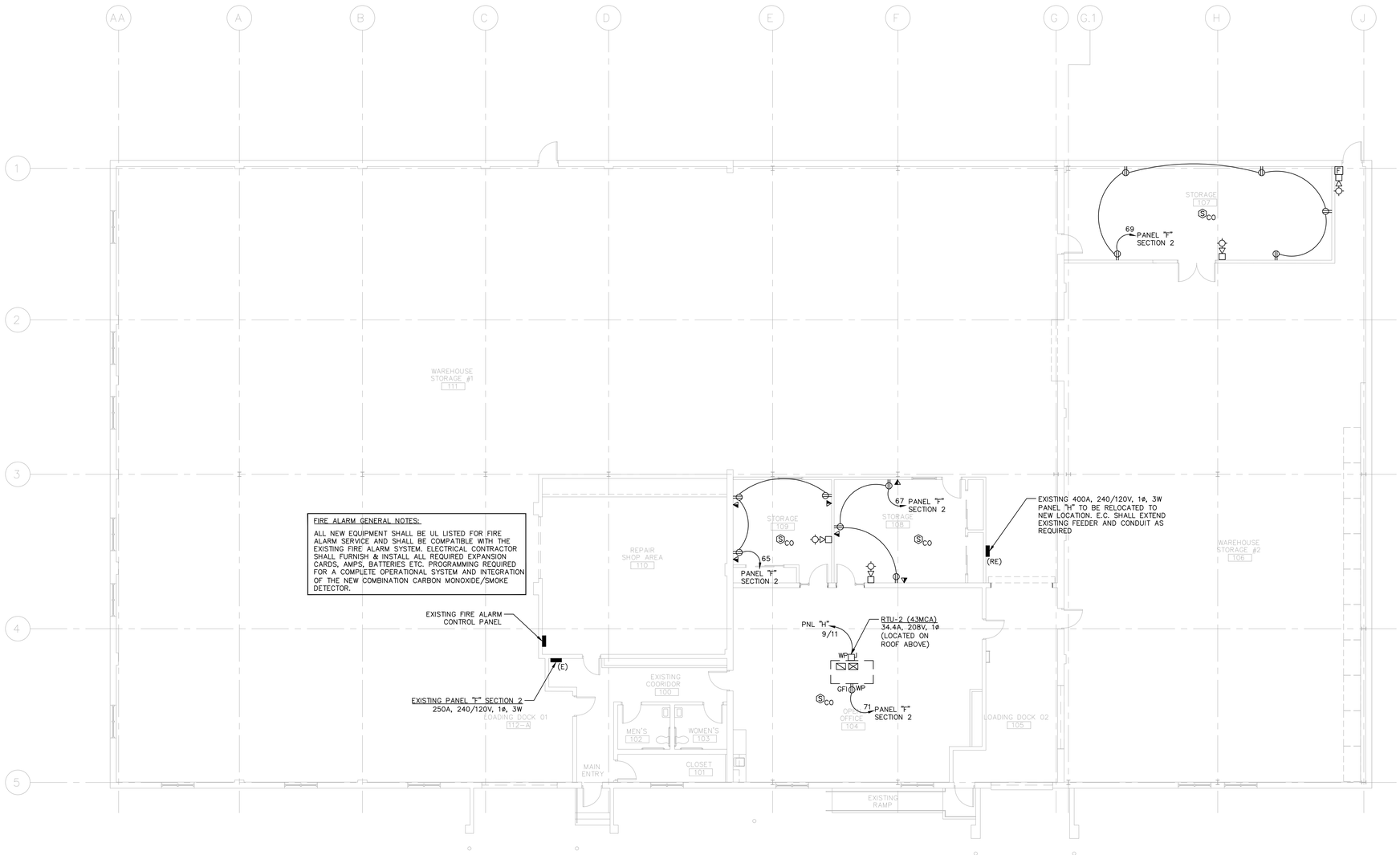

1 E-100 ELECTRICAL POWER NEW WORK PLAN
SCALE: 1/8" = 1'-0"

SOSH
- atlantic city, NJ - philadelphia, PA -

CONCORD ENGINEERING
www.concord-engineering.com
2311 Atlantic Avenue
Atlantic City, New Jersey 08401
(609) 272-9620

Anthony H. Caucci
Professional Engineer
New Jersey Lic. # 44806

ATLANTIC COUNTY VOTING MACHINE WAREHOUSE ALTERATION

235 DOLPHIN AVENUE
NORTHFIELD, NJ 08225

SUBMISSIONS

NO.	DATE:	DESCRIPTION:
	05/20/2022	CONSTRUCTION DOCUMENTS

DRAWING TITLE:
ELECTRICAL POWER NEW WORK PLAN

DRAWN BY: DS
REVIEWED BY: EJT
PROJECT NO. 22013.00.001
DRAWING NO. E-100

NEW WORK GENERAL NOTES:

1. VERIFY ALL DIMENSIONS AND CONDITIONS IN FIELD.
2. COORDINATE WORK WITH ALL OTHER TRADES.
3. REFER TO ARCHITECTURAL AND INTERIOR DESIGN DRAWINGS FOR EXACT LOCATIONS AND ELEVATIONS OF ALL NEW FIXTURES AND DEVICES.
4. NOTIFY ARCHITECT AND ENGINEER OF ANY DISCREPANCIES OR DEVIATIONS TO THE LAYOUTS SHOWN.

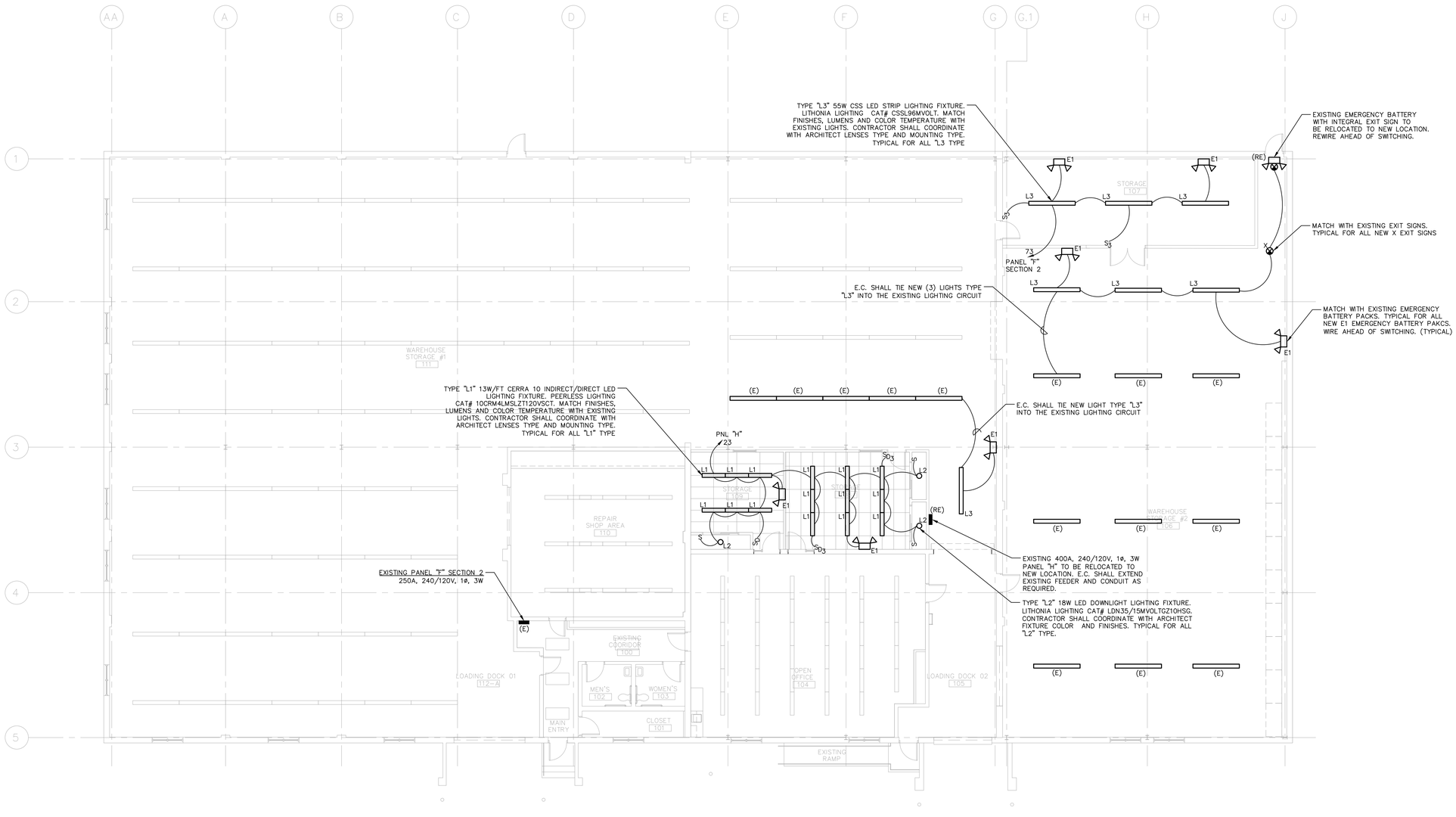

1 E-200 ELECTRICAL LIGHTING NEW WORK PLAN
SCALE: 1/8" = 1'-0"

SOSH
- atlantic city, NJ - philadelphia, PA -

CONCORD ENGINEERING
www.concord-engineering.com
2311 Atlantic Avenue
Atlantic City, New Jersey 08401
(609) 272-9620

Anthony H. Caucci
Professional Engineer
New Jersey Lic. # 44806

ATLANTIC COUNTY VOTING MACHINE WAREHOUSE ALTERATION

235 DOLPHIN AVENUE
NORTHFIELD, NJ 08225

SUBMISSIONS

NO.	DATE:	DESCRIPTION:
	05/20/2022	CONSTRUCTION DOCUMENTS

DRAWING TITLE:
ELECTRICAL LIGHTING NEW WORK PLAN

DRAWN BY: DS
REVIEWED BY: EJT
PROJECT NO. 22013.00.001
DRAWING NO. E-200