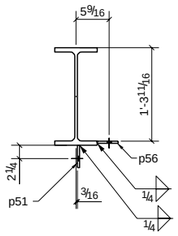

SECTION B - B

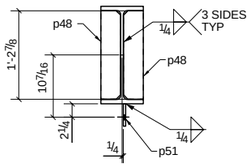

SECTION B - B

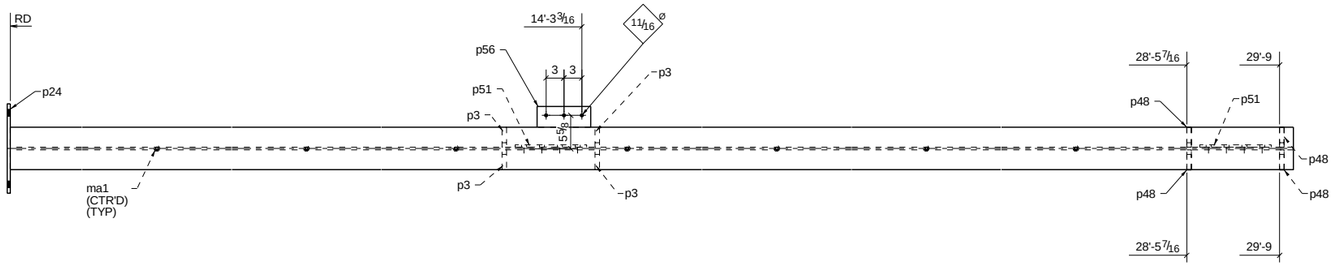

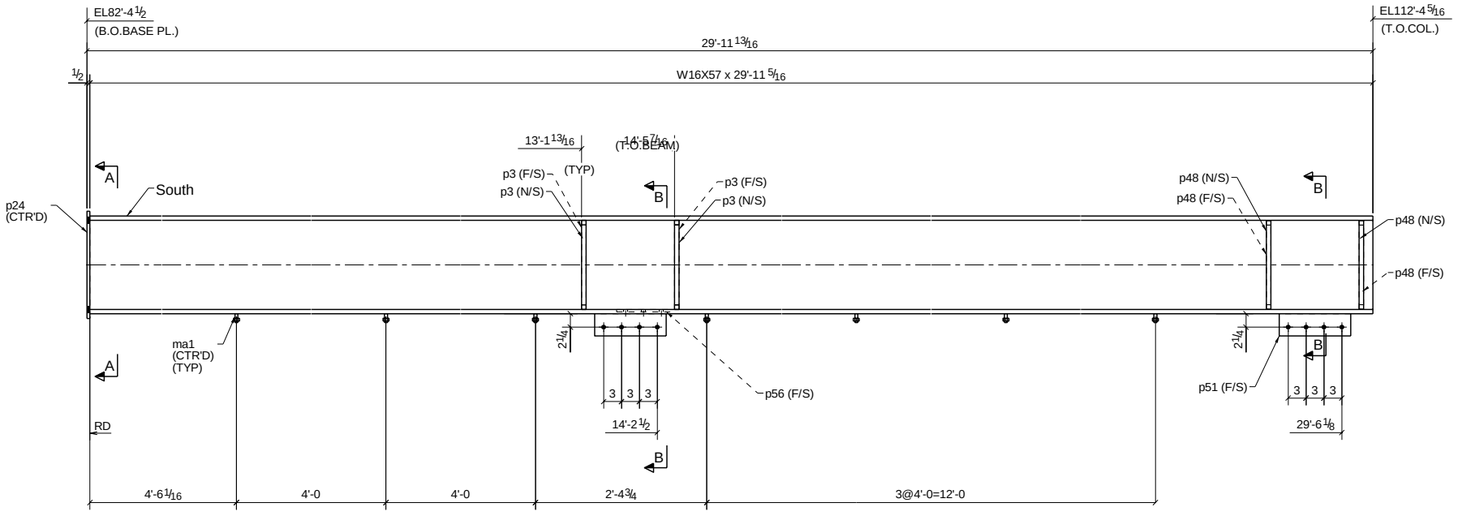

ONE ~ COLUMN ~ C15
(ONE@E1)

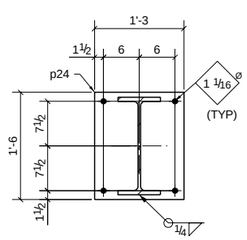

SECTION A - A

APPROVAL AUTHORITY :-

VERIFICATION OF DIMENSIONS, DETAILS, etc. IS REQUESTED WHERE INDICATED. IF EACH VERIFICATION IS NOT NOTED OTHERWISE IT WILL BE ASSUMED TO BE CORRECT AS SHOWN

BILL OF MATERIAL

QTY	PCS MRK	MATERIALS	LENGTH	REMARKS
1	C15	COLUMN		
1	C15	W16X57	29'-11 5/16"	
7	ma1	1/2Ø STUD BOLT	0'-1 1/2"	(A108)
4	p3	PL3/4"X3 5/16"	1'-2 15/16"	
1	p24	PL1/2"X15"	1'-6"	
4	p48	PL3/4"X3 5/16"	1'-2 7/8"	
2	p51	PL3/8"X3 3/4"	1'-0"	
1	p56	PL3/8"X3 1/2"	0'-9"	
		FIELD BOLTS		

BILL OF MATERIAL

QTY	PCS MRK	MATERIALS	LENGTH	REMARKS

FOR APPROVAL ONLY

SHOP NOTES

ALL STEEL SHALL BE A36 FY=36Ksi(U.N.O)

ALL WIDE FLANGE SHALL BE A992 FY=50Ksi(U.N.O)

ALL HSS SHALL BE A500 GR-B FY=46Ksi(U.N.O)

ALL PIPE SHALL BE A53 GR-B FY=35Ksi(U.N.O)

ALL HEADED STUD SHALL BE ASTM A108.

ALL HEADED & THREADED STUD SHALL BE AUTO WELDED

ARCHITECT:- C.J. Light Associates

ENGINEER:- Harold Larson Structural Designs

DATE	NO.	REVISION/DESCRIPTION
04/17/17	B	Revised As Per Approval Comment.

CLEAN :- SSPC-SP3

PRIMER :- STD SHOP

HOLES U.N.O. :- 13/16Ø

ELECTRODE :- E70XX

PROJ NO:- xxx

PROJECT :-GABRIEL RESIDENCE
107 Shorecliff Road Newport Beach•
California • 92625

DETAILS OF :-
COLUMN

DETAILER	CHECKER	FOR APPROVAL	FOR CONST.	SHEET #
MDF	SLF	DATE: 03/06/17	DATE:	C15 B

Texas Structures