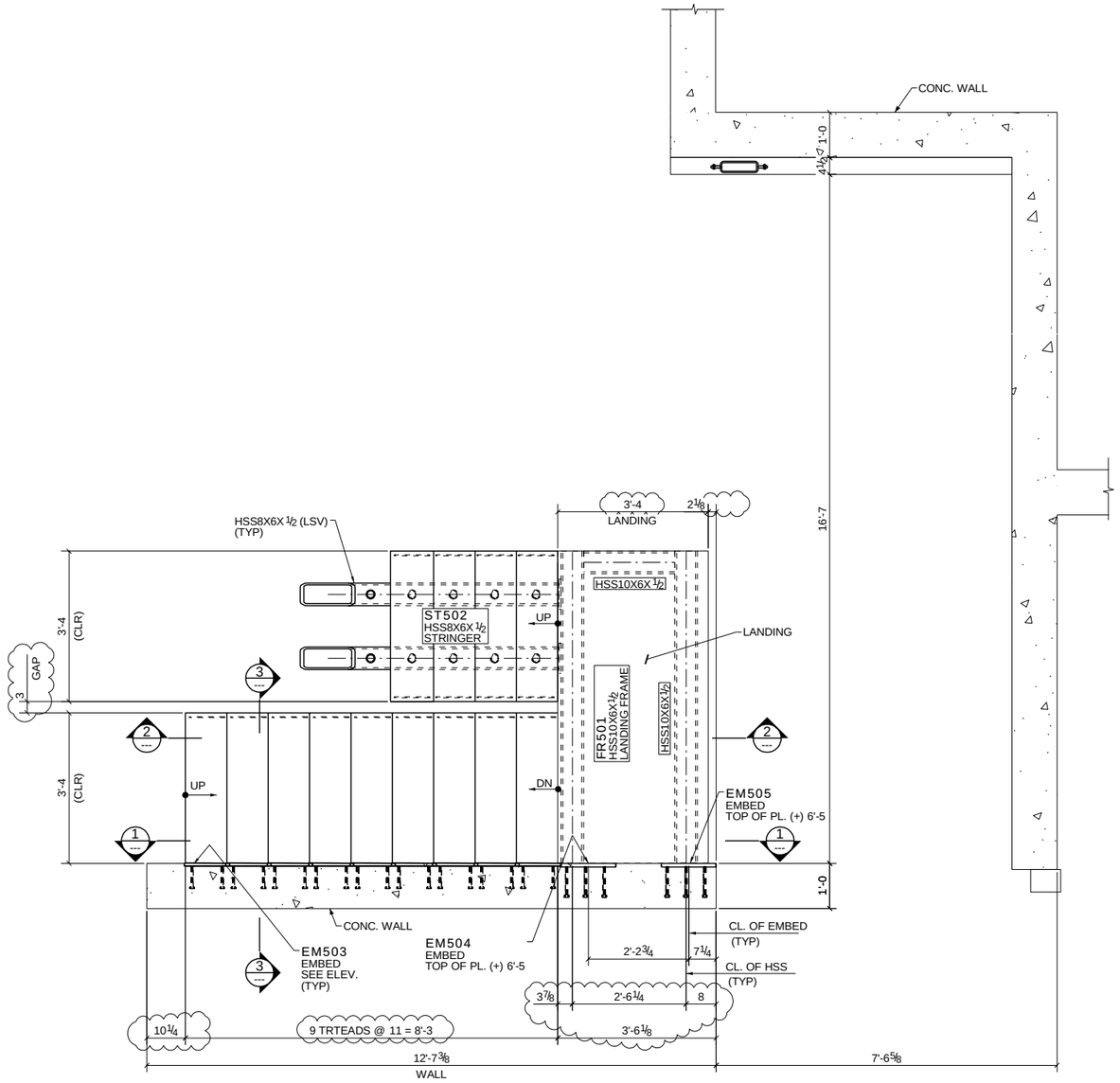

INTERIOR STAIR LAYOUT PLAN @ BASEMENT

(REF: A-2.0 & S-1)

(PLAN NORTH) (TRUE NORTH)

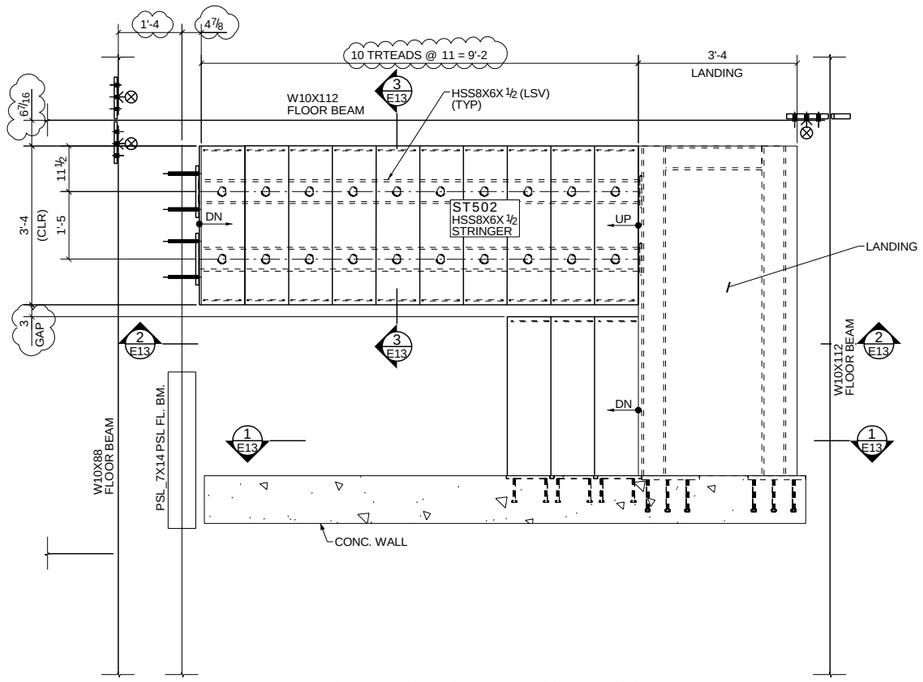

STAIR #2 LAYOUT PLAN @ FIRST FLOOR

(REF: A-2.0 & S-1)

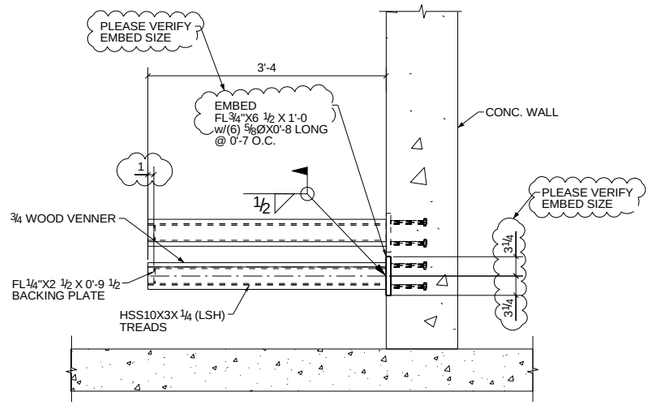

SECTION - 3

(REF: 105/D5 & 13/AD-1)

APPROVER NOTE:-

ALL DIMENSION AND ELEVATION ARE ASSUMED.
PLEASE VERIFY/PROVIDE ALL DIMENSION AND ELEVATION.

NOTES:-

ALL ELEVATION ARE GIVEN FROM EL. (±) 0'-0 = 52.61

DATE	NO.	REVISION/DESCRIPTION
		NOTES

THESE DRAWINGS ARE TO THE BEST INTERPRETATION OF THE CONTRACT DRAWINGS, THEREFORE ANY ERRORS ON THE ORIGINAL DRAWINGS ARE NOT THE FAULT OF THE DETAILER OR STEEL FABRICATOR. IT IS THE RESPONSIBILITY OF THE APPROVER(S) TO VERIFY AND CORRECT ANY DIMENSIONS, MATERIALS AND SECTION VIEWS. IF DIMENSIONS AND MATERIALS ARE NOT CORRECTED IN THE APPROVAL PROCESS WE ASSUME THEY ARE CORRECT AND ACCURATE AND ARE NOT LIABLE FOR ANY EXPENSE FOR CORRECTIONS THEREAFTER.

ELECTRODE :- E70XX

PROJECT :-
ZAHEDI RESIDENCE
GLATEA TER, CORONA

DETAILS OF :-
INTERIOR STAIR LAYOUT PLAN
@ BASEMENT

FOR APPROVAL ONLY

APPROVAL AUTHORITY :-

VERIFICATION OF DIMENSIONS, DETAILS, etc. IS REQUESTED WHERE INDICATED. IF EACH VERIFICATION IS NOT NOTED OTHERWISE IT WILL BE ASSUMED TO BE CORRECT AS SHOWN

DETAILER	CHECKER	FOR APPROVAL	FOR CONST.	SHEET #
ABA	MDF	DATE: 11/06/19	DATE: _ _ _ _ .	E12 A