Outillage de Garage / Garage Tool

Malette a outil (Clés à verrou et douilles) / Tool case (Ratchet and sockets)

Comprend / Included		Photo / Picture
1X Mallette à outil / Tool case	Possibilité couleur custom Possibility of custom color	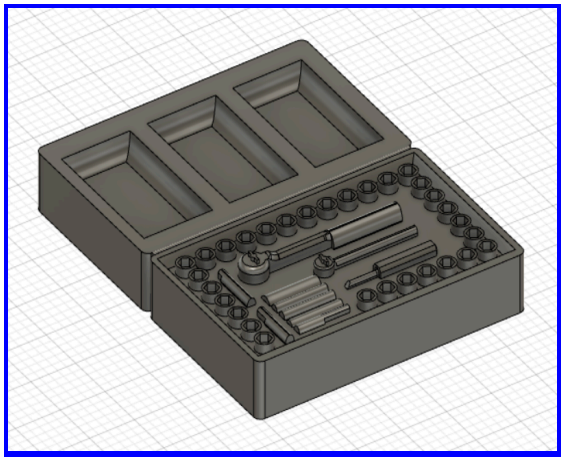
Dimension 1/18 / H = 6.0 mm / L = 3.7 cm / W = 3.0 cm	Tool 1-118	
Dimension 1/24 / H = 4.0 mm / L = 2.8 cm / W= 2.1 cm	Tool 1-124	

Malette a outil (Impact mécanique) / Tool case (Mechanical impact)

Comprend / Included		Photo / Picture
1X Mallette à outil / Tool case	Possibilité couleur custom Possibility of custom color	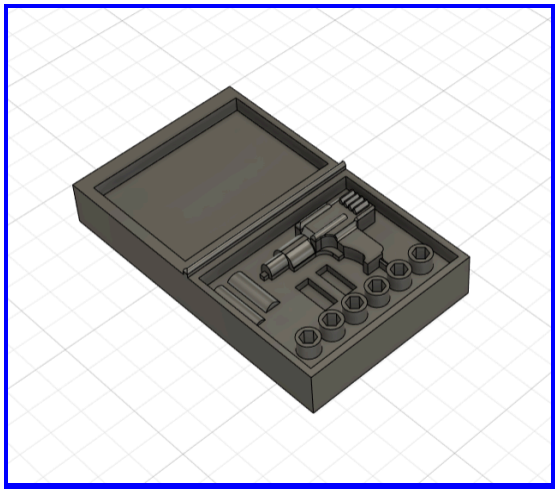
Dimension 1/18 / H = 6.0 mm / L = 4.1 cm / W = 2.4 cm	Tool 2-118	
Dimension 1/24 / H = 4.0 mm / L = 3.1 cm / W = 3.1 cm	Tool 2-124	

Malette a outil (Douille à impact) / Tool case (Impact socket)

Comprend / Included		Photo / Picture
1X Mallette à outil / Tool case	Possibilité couleur custom Possibility of custom color	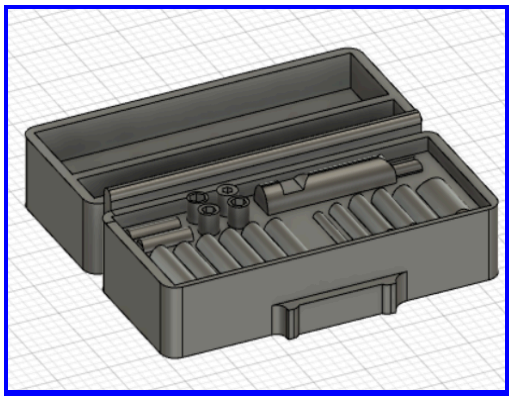
Dimension 1/18 / H = 6.0 mm / L = 3.2 cm / W = 2.9 cm	Tool 3-118	
Dimension 1/24 / H = 5.0 mm / L = 2.2 cm / W = 2.2 cm	Tool 3-124	

Malette a outil (Clé dynamométrique) / Tool case (Torque wrench)

Comprend / Included	Caractéristique	Photo / Picture
1X Malette a outil / Tool case	Possibilité couleur custom Possibility of custom color	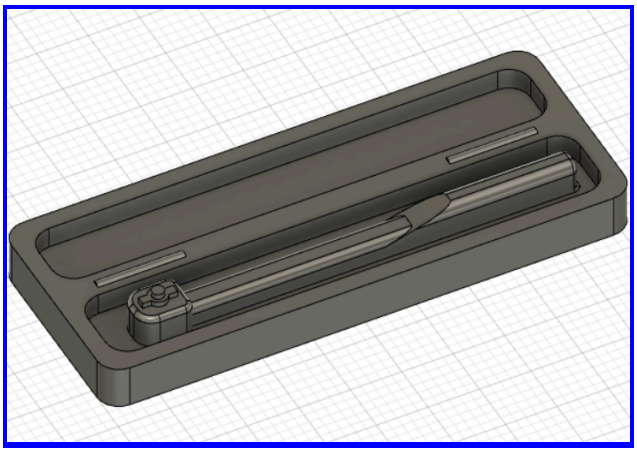
Dimension 1/18 / H = 4.0 mm / L = 6 cm / W = 2.4 cm	Tool 5-118	
Dimension 1/24 / H = 3.0 mm / L = 4.2 cm / W = 1.5 cm	Tool 5-124	

Malette a outil (Clé mécanique) / Tool case (Mechanical key)

Comprend / Included		Photo / Picture
1X Mallette à outil / Tool case	Possibilité couleur custom Possibility of custom color	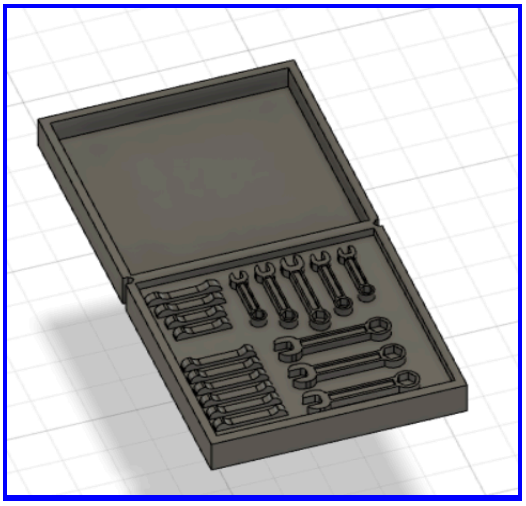
Dimension 1/18 / H = 5.0 mm / L = 5.4 cm / W = 2.8 cm	Tool 6-118	
Dimension 1/24 / H = 4.0 mm / L = 2.1 cm / W = 2.1 cm	Tool 6-124	

Malette a outil (Lecteur de code OBD2) / Tool case (OBD2 reader)

Comprend / Included		Photo / Picture
1X Mallette à outil / Tool case	Possibilité couleur custom Possibility of custom color	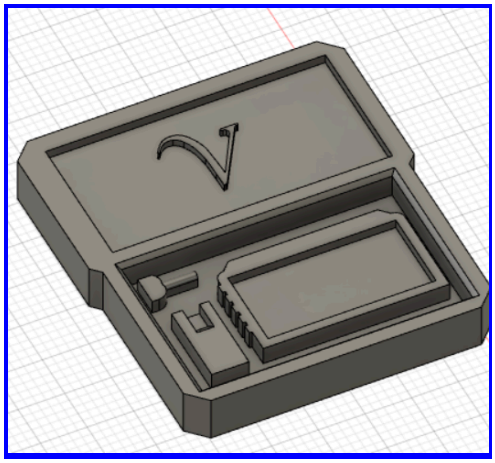
Dimension 1/18 / H = 5.0 mm / L = 5.4 cm / W = 2.8 cm	Tool 7-118	
Dimension 1/24 / H = 4.0 mm / L = 2.1 cm / W = 2.1 cm	Tool 7-124	

Malette a outil (Étau à glissière) / Tool case (Vice)

Comprend / Included		Photo / Picture
1X Mallette à outil / Tool case	Possibilité couleur custom Possibility of custom color	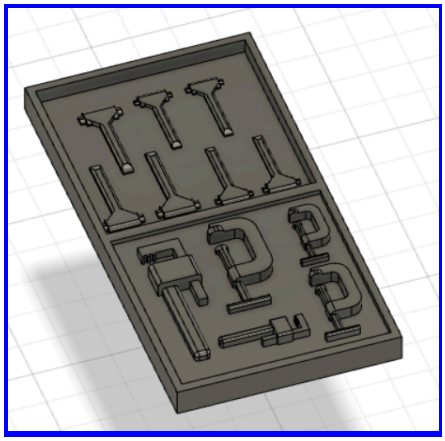
Dimension 1/18 / H = 5.0 mm / L = 5.4 cm / W = 2.8 cm	Tool 8-118	
Dimension 1/24 / H = 4.0 mm / L = 4.1 cm / W = 2.1 cm	Tool 8-124	

Malette a outil (Perceuse à batterie) / Tool case (Battery drill)

Comprend / Included		Photo / Picture
1X Mallette à outil / Tool case	Possibilité couleur custom Possibility of custom color	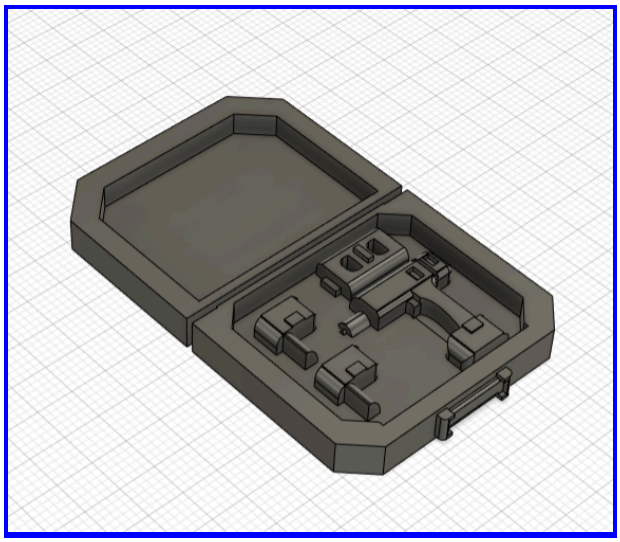
Dimension 1/18 / H = 4.0 mm / L = 4.3 cm / W = 2.2 cm	Tool 9-118	
Dimension 1/24 / H = 3.0 mm / L = 3.2 cm / W= 1.5 cm	Tool 9-124	

Malette a outil fermé X2 / Closed tool case X2

Comprend / Included		Photo / Picture
2X Malette à outil / Tool case	Possibilité couleur custom Possibility of custom color	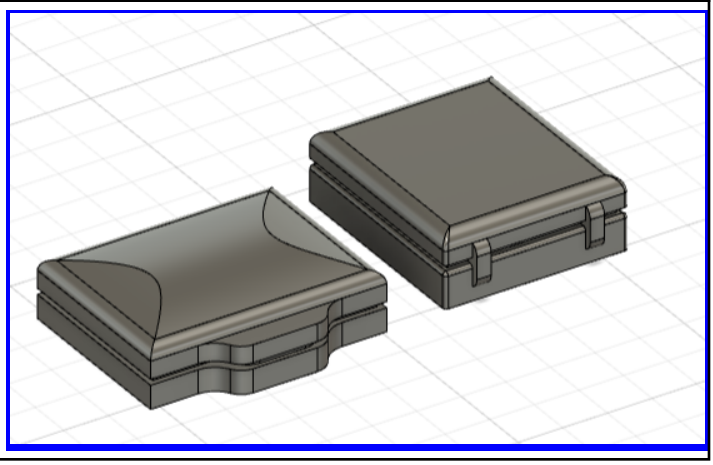
Dimension 1/18 / H = 6.0 mm / L = 2.6 cm / W = 1.8 cm	Tool 9-118	
Dimension 1/24 / H = 5.0 mm / L = 1.9 cm / W = 1.4 cm	Tool 9-124	

Étau d’établi ajustable / Ajustable Vice

Comprend / Included		Photo / Picture
1X Étau / Vice	Possibilité couleur custom Possibility of custom color Ajustable	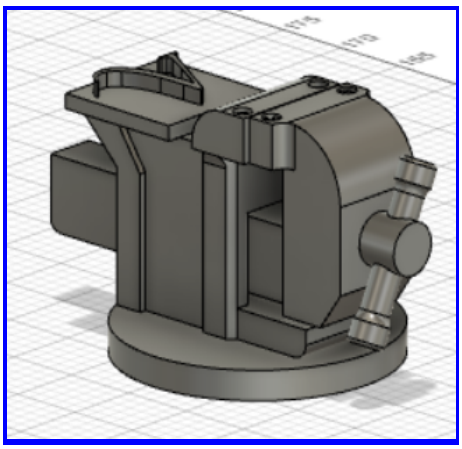
Dimension 1/18 / H = 1.5 cm / L = Ajustable / W= 1.9 cm	Tool 10-118	
Dimension 1/24 / H = 1.1 cm / L = Ajustable / W= 1.4 cm	Tool 10-124	

Meuleuse / Grinder

Comprend / Included		Photo / Picture
1X Meuleuse / Grinder	Possibilité couleur custom Possibility of custom color	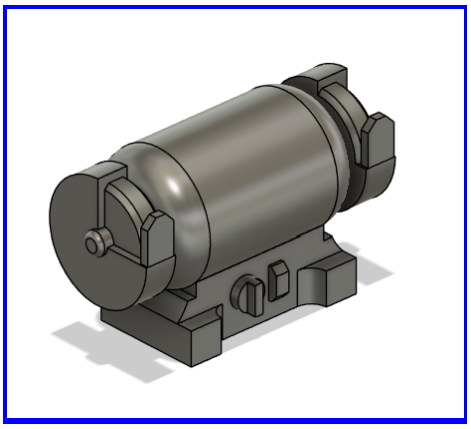
Dimension 1/18 / H = 2.0 cm / L = 3.2 / W = 1.3 cm	Tool 12-1/18	
Dimension 1/24 / H = 1.6 cm / L = 2.6 / W = 8.0 mm	Tool 12-124	

Polisseuse à carrosserie / Body polisher

Comprend / Included		Photo / Picture
1X Polisseuse / Polisher	Possibilité couleur custom Possibility of custom color	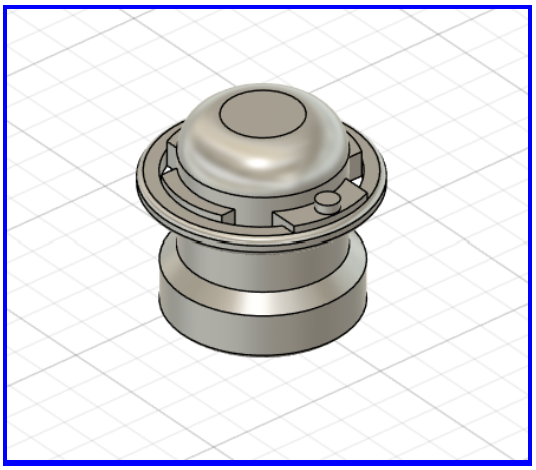
Dimension 1/18 / H = 2.0 cm / L = 3.2 / W = 1.3 cm	Tool 12-1/18	
Dimension 1/24 / H = 1.6 cm / L = 2.6 / W = 8.0 mm	Tool 12-124	