PARTS BREAKDOWN DRAWINGS

MAXON® 11921 Slauson Ave. Santa Fe Springs, CA. 90670 (800) 227-4116 FAX (888) 771-7713

PARTS DRAWINGS (PAGE 1)

MAXON®
11921 Slauson Ave. Santa Fe Springs, CA. 90670 (800) 227-4116 FAX (888) 771-7713

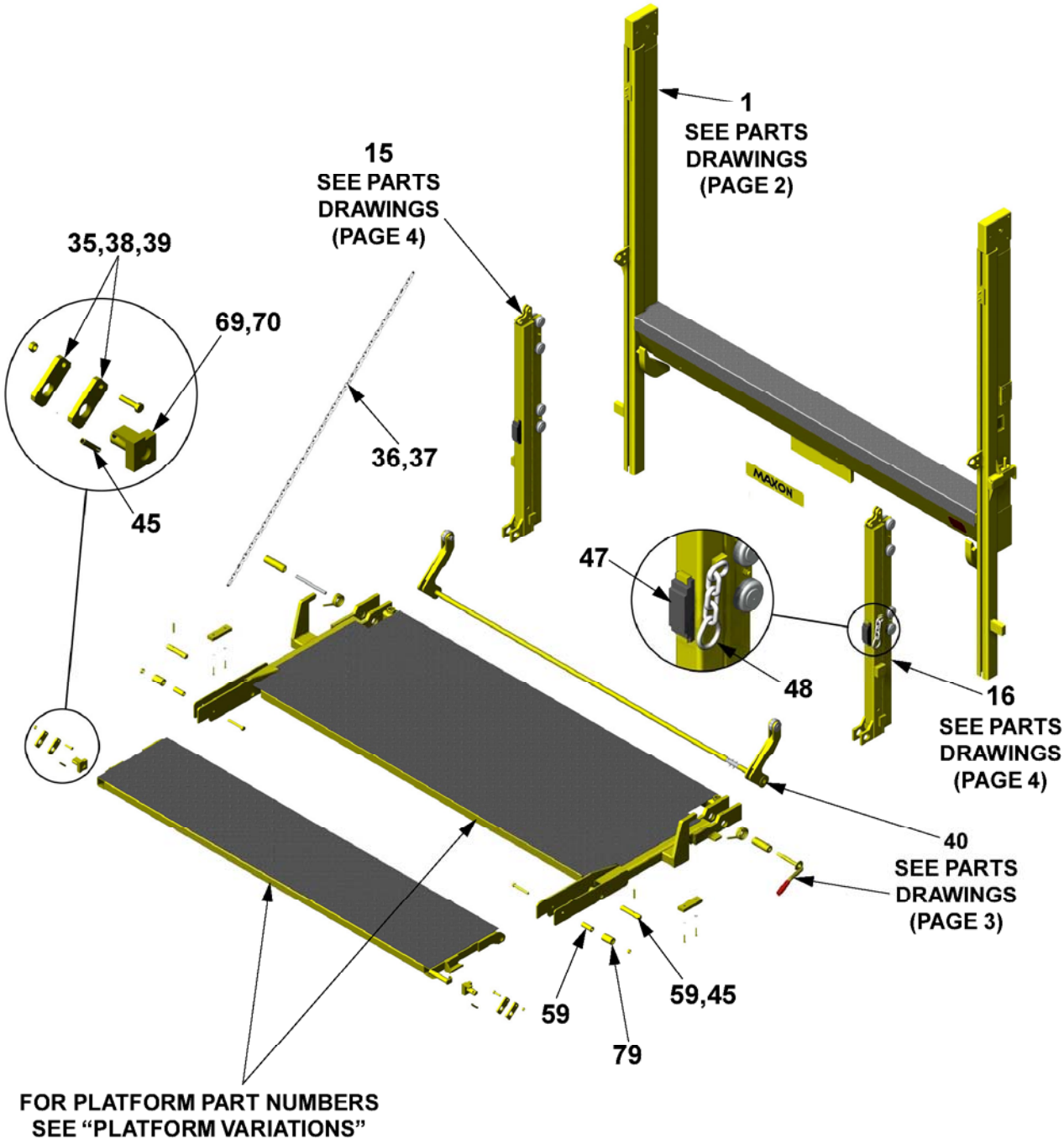

PARTS DRAWINGS (PAGE 1)

ITEM	QTY.	PART NO.	DESCRIPTION
1	1	250908	MAINFRAME CLMN. ASY. 96" WIDE
		250908-04	MAINFRAME CLMN. ASY. 102" WIDE
15	1	251039-01	RUNNER ASSEMBLY, LEFT SIDE
16	1	251039-02	RUNNER ASSEMBLY, RIGHT SIDE
35	4	030041	BOLT, 3/8-24 UNF x 1-1/2" LG.
36	2	202698-?? (SEE CHART BELOW)	CHAIN
37	2	202840	HOSE, CHAIN
38	4	203853	NUT, 3/8-24 UNF SELF-LOCKING
39	4	202671	RUNNER LINK x 3-3/8"
45	5	221416	ROLL PIN, 3/8" x 2" LG.
47	2	227426	RUBBER BUMPER
48	1	250784	PLATFORM RETAINER (1 PC. PLTFM)
		252452	PLATFORM RETAINER (2 PC. PLTFM)
59	2	251859	PIN, FOLDING SECTION
69	1	222210-01	BRACKET, CHAIN ANCHOR
70	1	222210-02	BRACKET, CHAIN ANCHOR
79	2	074002-01	BEARING

CHAIN CHART

	42" Platform	48" Platform	54" Platform	60" Platform	66" Platform	72" Platform
RC-2B,3B	202698-01 60" Chain	202698-02 64" Chain	202698-03 68" Chain	202698-04 72" Chain	202698-05 77" Chain	202698-06 82" Chain
RC-4B	202698-07 65" Chain	202698-08 69" Chain	202698-09 73" Chain	202698-05 77" Chain	202698-06 82" Chain	202698-10 86" Chain
RC-5B,6B				202698-11 84" Chain	202698-12 88" Chain	202698-13 92" Chain

	78" Platform	84" Platform	96" Platform
RC-5B	202698-14 97" Chain	202698-15 102" Chain	202698-16 112" Chain
RC-6B	202698-17 104" Chain	202698-18 108" Chain	202698-19 118" Chain

MAXON® 11921 Slauson Ave. Santa Fe Springs, CA. 90670 (800) 227-4116 FAX (888) 771-7713

PARTS DRAWINGS (PAGE 2)

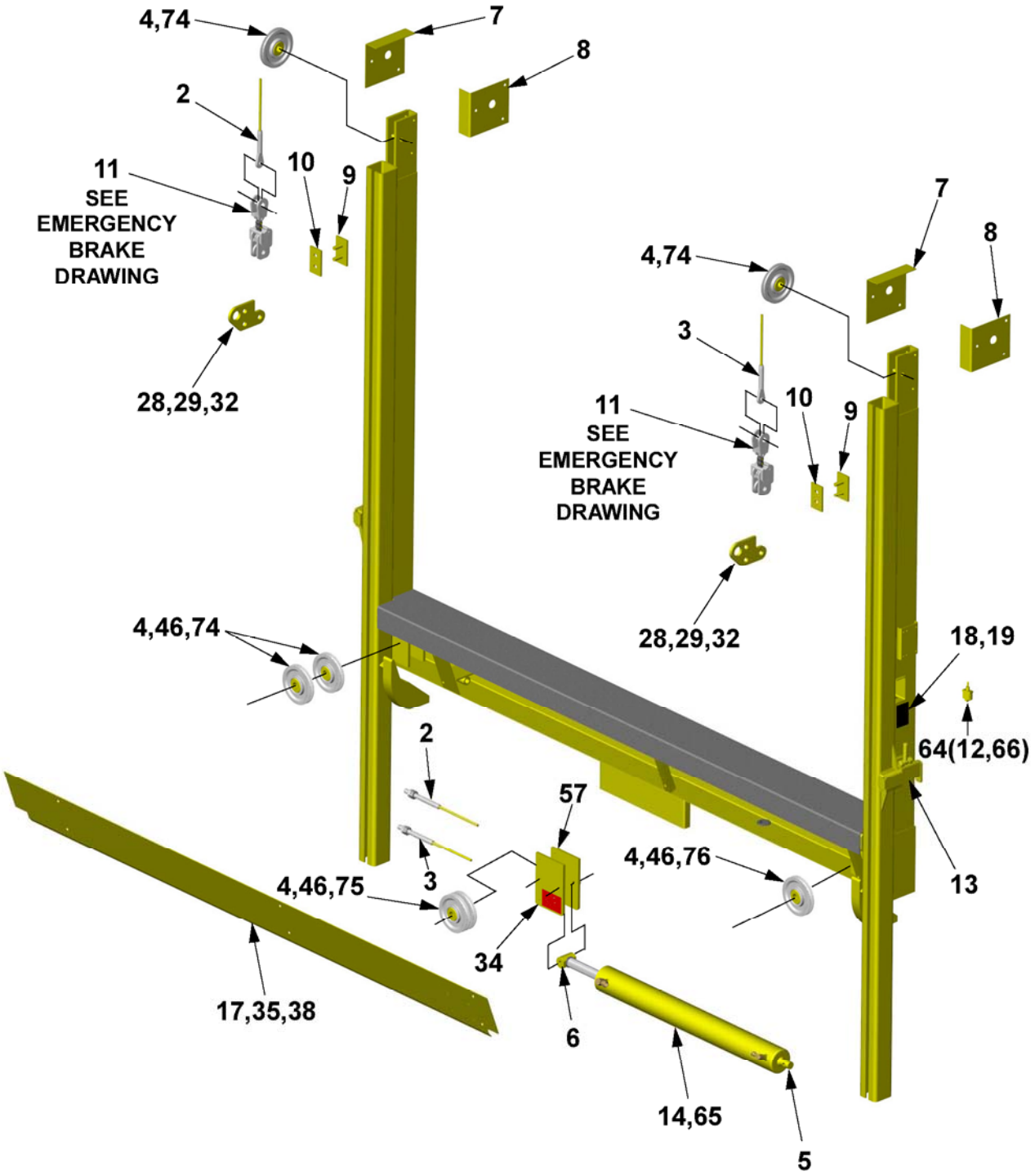

MAXON® 11921 Slauson Ave. Santa Fe Springs, CA. 90670 (800) 227-4116 FAX (888) 771-7713

PARTS DRAWINGS (PAGE 2)

ITEM	QTY.	PART NO.	DESCRIPTION
2	1	227191-01	WIRE ROPE ASSY. 96" WIDE RC-2B, RC-3B
		227192-01	WIRE ROPE ASSY. 102" WIDE RC-2B, RC-3B
		251588-01	WIRE ROPE ASSY. 96" WIDE RC-4B
		227190-01	WIRE ROPE ASSY. 102" WIDE RC-4B
		252402-01	WIRE ROPE ASSY. 96" WIDE RC-5B, RC-6B
		252403-01	WIRE ROPE ASSY. 102" WIDE RC-5B, RC-6B
		252401-01	WIRE ROPE ASSY. 96" WIDE RC-6K
		252400-01	WIRE ROPE ASSY. 102" WIDE RC-6K
3	1	227191-02	WIRE ROPE ASSY. 96" WIDE RC-2B, RC-3B
		227192-02	WIRE ROPE ASSY. 102" WIDE RC-2B, RC-3B
		251588-02	WIRE ROPE ASSY. 96" WIDE RC-4B
		227190-02	WIRE ROPE ASSY. 102" WIDE RC-4B
		252402-02	WIRE ROPE ASSY. 96" WIDE RC-5B, RC-6B
		252403-02	WIRE ROPE ASSY. 102" WIDE RC-5B, RC-6B
		252401-02	WIRE ROPE ASSY. 96" WIDE RC-6K
		252400-02	WIRE ROPE ASSY. 102" WIDE RC-6K
4	7	253307	SHEAVE ASSY. W/BEARING RC-2B, RC-3B
		253308	SHEAVE ASSY. W/BEARING RC-4B
		253309	SHEAVE ASSY. W/BEARING RC-5B, RC-6B, RC-6K
4a	1	253108	SHEAVE, RC-2B, RC-3B
		253107	SHEAVE, RC-4B
		253106	SHEAVE, RC-5B, RC-6B, RC-6K
4b	1	801412	BEARING
5	1	202465	BOLT, CYLINDER ASSEMBLY, RC-2B, RC-3B, RC-4B
		203237	BOLT, CYLINDER ASSEMBLY, RC-5B, RC-6B, RC-6K
6	1	202466	BOLT, CYLINDER ASSEMBLY, RC-2B, RC-3B
		202978	BOLT, CYLINDER ASSEMBLY, RC-4B
		203236	BOLT, CYLINDER ASSEMBLY, RC-5B, RC-6B, RC-6K
7	2	202619	COVER, UPPER PULLY LH, RC-2B, RC-3B
		202927	COVER, UPPER PULLY LH, RC-4B
		203212	COVER, UPPER PULLY LH, RC-5B, RC-6B, RC-6K
8	2	202777	COVER, UPPER PULLY RH, RC-2B, RC-3B
		202928	COVER, UPPER PULLY RH, RC-4B
		203213	COVER, UPPER PULLY RH, RC-5B, RC-6B, RC-6K

MAXON® 11921 Slauson Ave. Santa Fe Springs, CA. 90670 (800) 227-4116 FAX (888) 771-7713

PARTS DRAWINGS (PAGE 2)

ITEM	QTY.	PART NO.	DESCRIPTION
9	2	250635	INTERNAL STOP, INNER PLATE
10	2	250634	INTERNAL STOP, OUTER PLATE
11	2	226969	EMERGENCY BRAKE
12	1	226889	SWITCH TOGGLE
13	2	250800	PIN WELDMENT, SAFETY LATCH
14	1	253111	CYLINDER, 3" x 28" RC-2B, RC-3B
		253109	CYLINDER, 3-1/2" x 28" RC-4B
		253110	CYLINDER, 4" x 28" RC-5B, RC-6B, RC-6K
17	1	226202	COVER, MAINFRAME 96" WIDE RC-2B, RC-3B, RC-4B
		226203	COVER, MAINFRAME 102" WIDE RC-2B, RC-3B, RC-4B
		226088	COVER, MAINFRAME 96" WIDE RC-5B, RC-6B, RC-6K
		226089	COVER, MAINFRAME 102" WIDE RC-5B, RC-6B, RC-6K
18	1	250993	DECAL, UP/DOWN OUTSIDE
19	1	250992	DECAL, UP/DOWN INSIDE
28	2	227195	LINK LUG, RUNNER
29	4	030064	BOLT, 5/8-18 UNF x 2" GRADE 5
32	4	030569	LOCKWASHER, 5/8"
34	1	202562	CYLINDER ANCHOR PLATE RC-2B, RC-3B
		202926	CYLINDER ANCHOR PLATE RC-4B
		203210	CYLINDER ANCHOR PLATE RC-5B, RC-6B, RC-6K
35	4	030041	BOLT, 3/8-24 UNF x 1-1/2" LG. GRADE 8
38	4	203853	NUT, 3/8-24 UNF SELF LOCKING
46	2	253460	WASHER, SPACER (RC-2B, RC-3B ONLY)
57	1	252425	ANCHOR PLATE, CYL. ROD END (RC-2B, RC-3B ONLY)
64	1	250916	ELECTRICAL SWITCH ASSEMBLY
65	1	253464	SEAL KIT, HYD. CYLINDER RC-2B, RC-3B
		253465	SEAL KIT, HYD. CYLINDER RC-4B
		253466	SEAL KIT, HYD. CYLINDER RC-5B, RC-6B, RC-6K
66	1	250876	SWITCH SEAL
74	3	253330	BOLT, 1/2-20 UNF x 2-3/4" LG.
75	2	253331	BOLT, 1/2-20 UNF x 3-5/8" LG.
76	1	253333	BOLT, 1/2-20 UNF x 4-3/4" LG.

MAXON®
11921 Slauson Ave. Santa Fe Springs, CA. 90670 (800) 227-4116 FAX (888) 771-7713

PARTS DRAWINGS (PAGE 3)

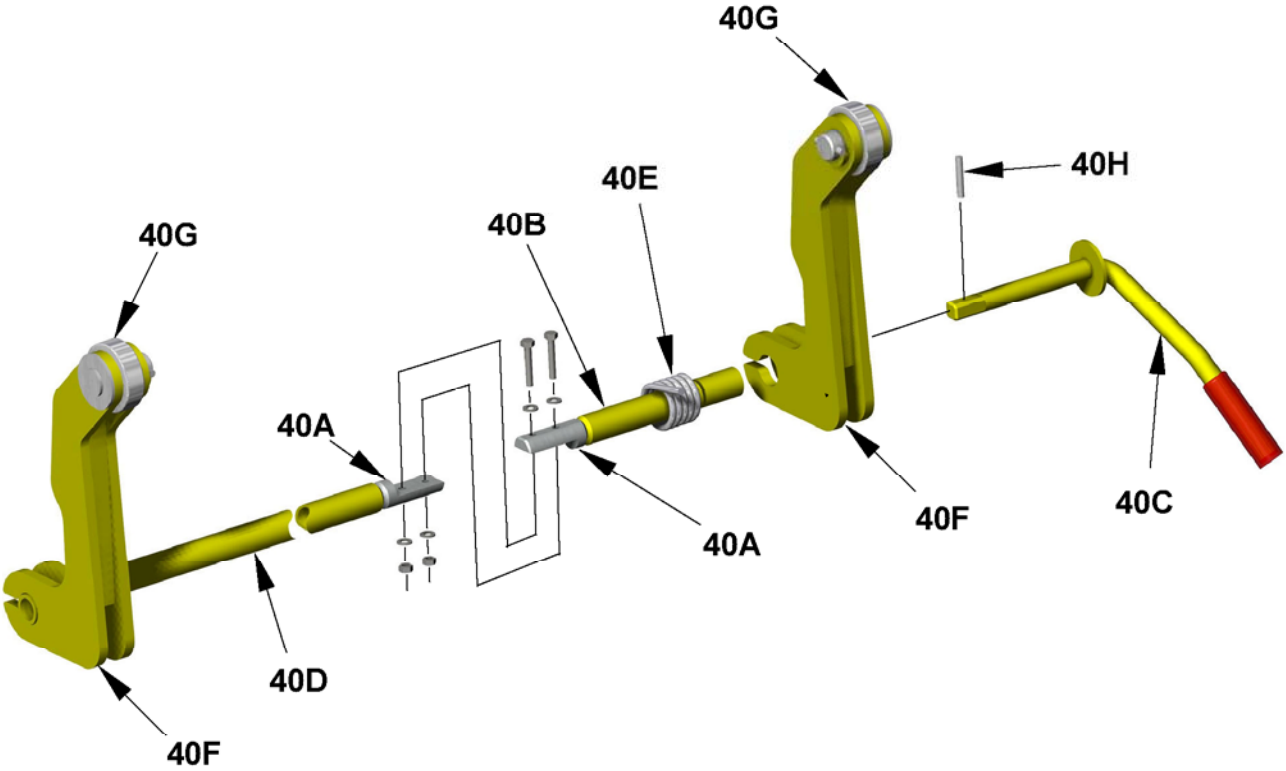

ITEM	QTY.	PART NUMBER					DESCRIPTION
40		262418					CAM FOLLOWER ASSY. 90" WIDE
			262419				CAM FOLLOWER ASSY. 96" WIDE
				262419-01			CAM FOLLOWER ASSY. 96" WIDE AB
					262420		CAM FOLLOWER ASSY. 102" WIDE
						262420-01	CAM FOLLOWER ASSY. 102" WIDE AB
40A	1	262268					COUPLING ASSEMBLY
40B	1	262267					TUBE ANCHOR WELDMENT
40C	1	262417					HANDLE WELDMENT, CAM FOLLOWER
40D	1		262270				CAM FOLLOWER SHAFT, 96" WIDE
					262270-01		CAM FOLLOWER SHAFT, 102" WIDE
		262270-02					CAM FOLLOWER SHAFT, 90" WIDE
40E	1	217643					TORSION SPRING
40F	2	251231					CAM WELDMENT
40G	2	250844					ROLLER ASSEMBLY
40H	1	030410					ROLL PIN, 1/4" x 1-1/2"

MAXON® 11921 Slauson Ave. Santa Fe Springs, CA. 90670 (800) 227-4116 FAX (888) 771-7713

PARTS DRAWINGS (PAGE 4)

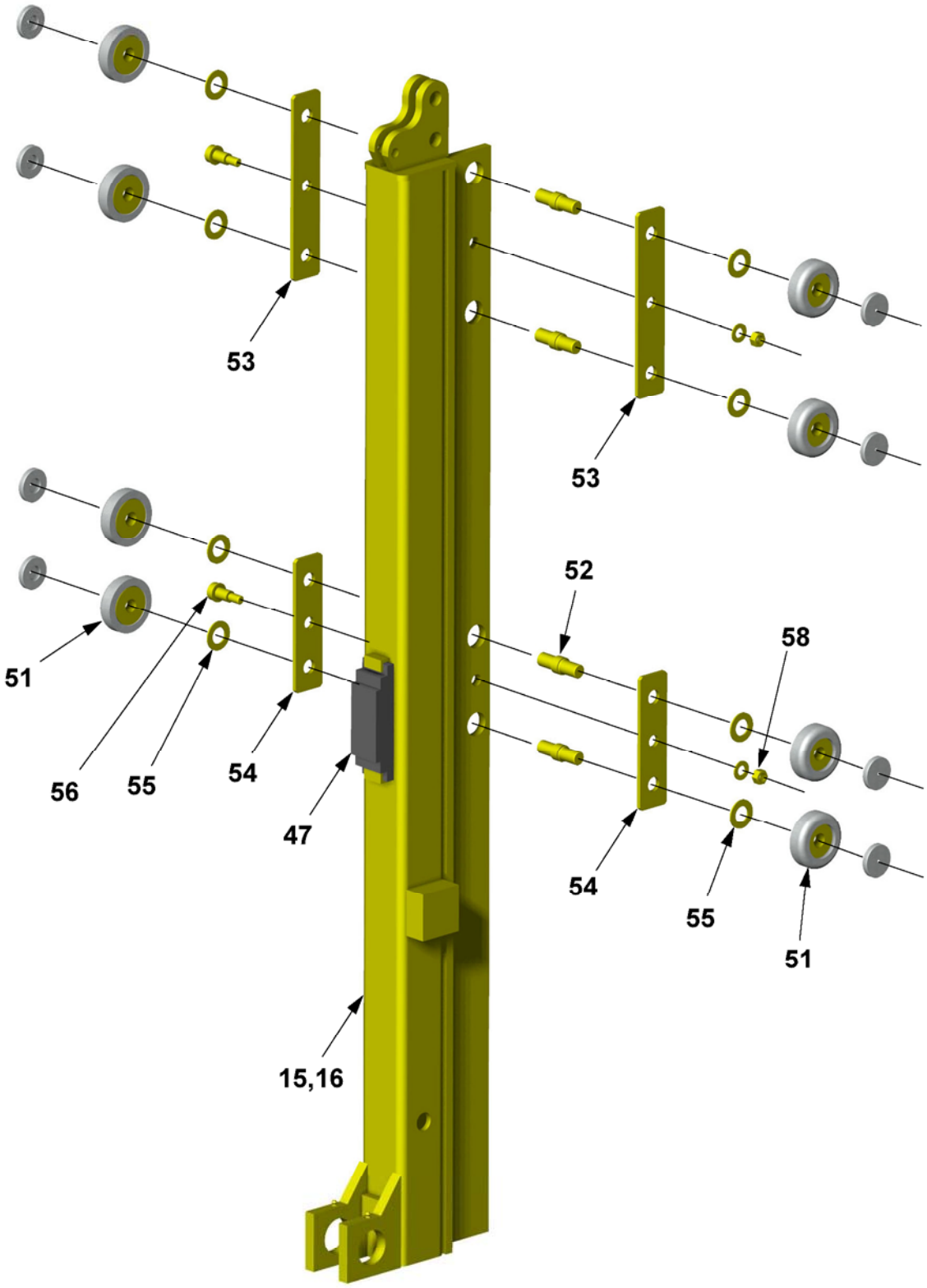

MAXON® 11921 Slauson Ave. Santa Fe Springs, CA. 90670 (800) 227-4116 FAX (888) 771-7713

PARTS DRAWINGS (PAGE 4)

ITEM	QTY.	PART NO.	DESCRIPTION
15	1	251037-01	RUNNER ASSEMBLY LH RC-2B, RC-3B
		251038-01	RUNNER ASSEMBLY LH RC-4B
		251039-01	RUNNER ASSEMBLY LH RC-5B, RC-6B
		251040-01	RUNNER ASSEMBLY LH RC-6K
16	1	251037-02	RUNNER ASSEMBLY RH RC-2B, RC-3B
		251038-02	RUNNER ASSEMBLY RH RC-4B
		251039-02	RUNNER ASSEMBLY RH RC-5B, RC-6B
		251040-02	RUNNER ASSEMBLY RH RC-6K
47	2	227426	RUBBER BUMPER
51	16	202800	ROLLER BEARING ASSEMBLY
52	8	202796	BALL RACE TANDEM SHAFT
53	4	203002	PLATE, TANDEM SUPPORT, 8" LG. TOP
54	4	227395	PLATE, TANDEM SUPPORT, 8" LG. BOTTOM
55	16	202771	FLAT WASHER
56	4	202797	SHOULDER BOLT

MAXON® 11921 Slauson Ave. Santa Fe Springs, CA. 90670 (800) 227-4116 FAX (888) 771-7713

EMERGENCY BRAKE DRAWING
P/N 226969

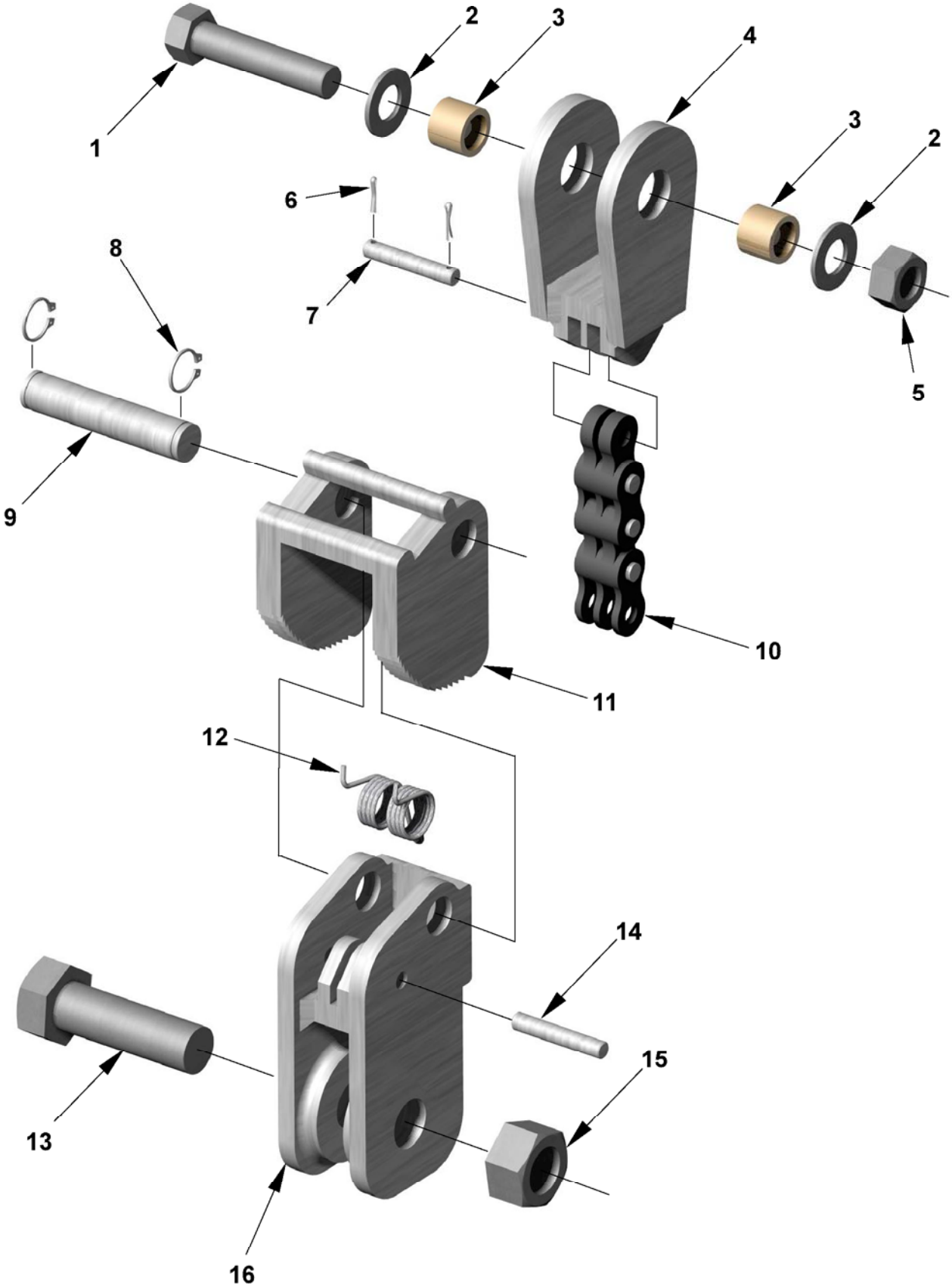

MAXON®
11921 Slauson Ave. Santa Fe Springs, CA. 90670 (800) 227-4116 FAX (888) 771-7713

EMERGENCY BRAKE DRAWING
P/N 226969

ITEM	QTY.		PART NUMBER	DESCRIPTION
	RC-2,3	RC-4,5,6		
1	1	N/A	227317	HEX BOLT, 7/16-20 UNF GRD.8 x 2"LG.
2	2		030585	WASHER, FLAT, 7/16"
3	2		227315	ROUND TUBE, 5/8" O.D. x .083W x 1/2" LG.
4	1		226984	BRACKET
5	1	N/A	227316	HEX NUT, 7/16-20 UNF ELASTIC STOP NUT
6	2		226855	COTTER PIN
7	1		226982	PIN, (LEAF CHAIN / BRACKET)
8	2		227008	RETAINING RING
9	1		226979	SHAFT (CAM PIVOT)
10	1		226981-01	LEAF CHAIN
11	1		226975	SNAIL CAM
12	1		226980	TORSION SPRING
13	1	2	030064	HEX BOLT, 5/8-18 UNF GRD.5 x 2"LG.
14	1		226978	PIN (ANCHOR PLATE / LEAF CHAIN)
15	1	2	226940	HEX NUT, 5/8-18 UNF ELASTIC STOP NUT
16	1		226970	ANCHOR PLATE

MAXON® 11921 Slauson Ave. Santa Fe Springs, CA. 90670 (800) 227-4116 FAX (888) 771-7713

PUMP, CAM CLOSER
P/N 253171

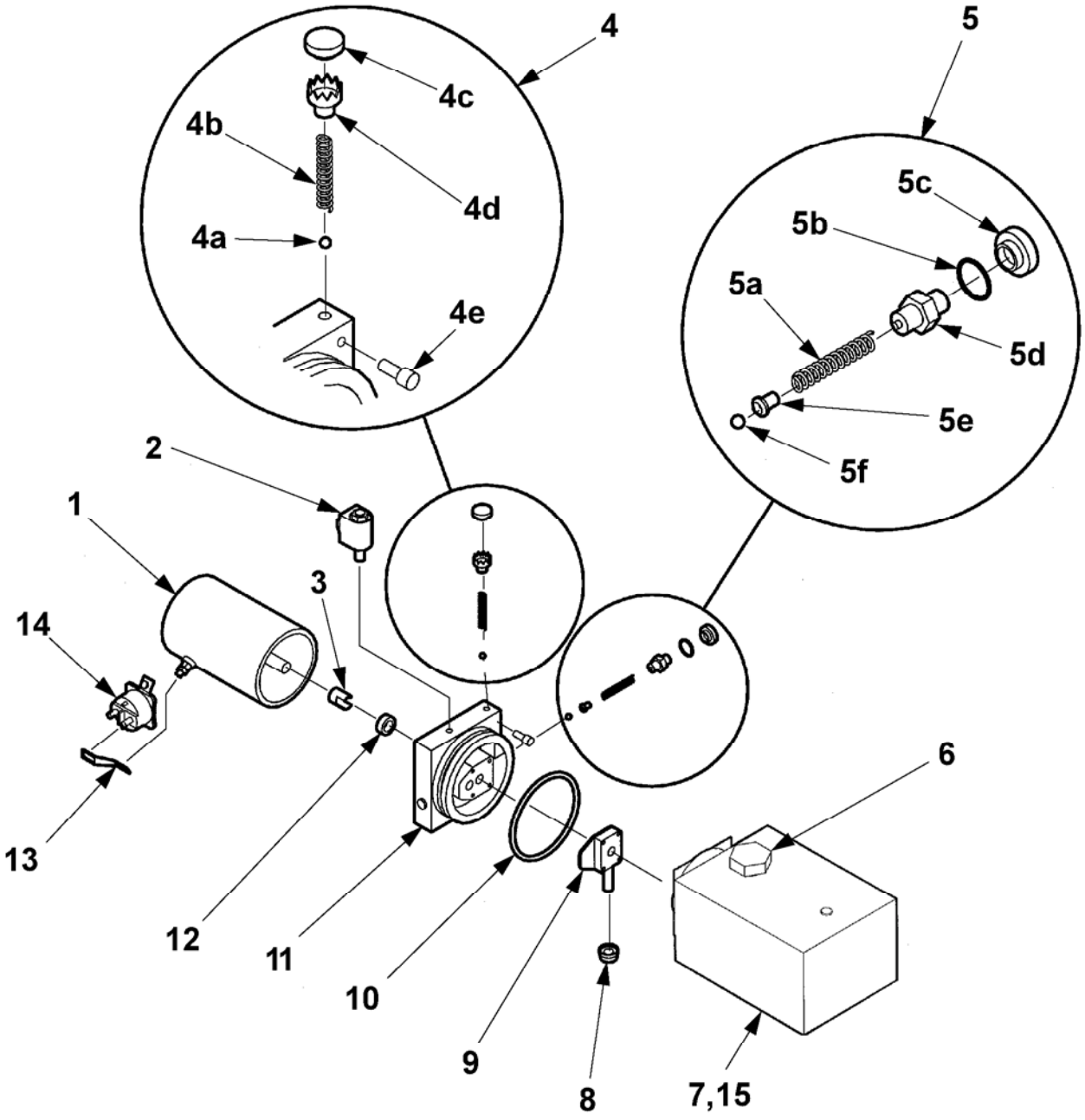

MAXON® 11921 Slauson Ave. Santa Fe Springs, CA. 90670 (800) 227-4116 FAX (888) 771-7713

PUMP, CAM CLOSER
P/N 253171

ITEM	QTY.	PART NUMBER	DESCRIPTION
1	1	250093	MOTOR, HEAVY DUTY 12 VOLTS DC
2	1	253353	VALVE, SOLENOID 2-WAY
*2a	1	226594	O-RING KIT, 2-WAY VALVE
3	1	229200	COUPLING
4	1	251885	CHECK VALVE KIT
4a	1	260257	STEEL BALL
4b	1	260254	SPRING
4c	1	260258	PLUG
4d	1	260255	RETAINER
4e	1	260256	SOCKET HEAD CAPSCREW
5	1	260229	RELIEF VALVE KIT
5a	1	260231	SPRING
5b	1	260235	O-RING
5c	1	260234	VALVE CAP
5d	1	260232	ADJUSTING SCREW
5e	1	260233	SPRING GUIDE
5f	1	260230	STEEL BALL
6	1	260847	FILLER/BREATHER CAP
7	1	251882	RESERVOIR, 3 QT.
8	1	260250	FILTER
9	1	260236	PUMP ASSEMBLY
10	1	251884	0-RING
11	1	260252	DRIVEPLATE ASSEMBLY 5"
12	1	260261	OIL SEAL
13	1	262966	BUS BAR
14	1	262939	SOLENOID SWITCH
*15	4	229202	CAPSCREW, HEX. WASHER HD.

MAXON® 11921 Slauson Ave. Santa Fe Springs, CA. 90670 (800) 227-4116 FAX (888) 771-7713

PUMP, HYDRAULIC CLOSER
P/N 262256

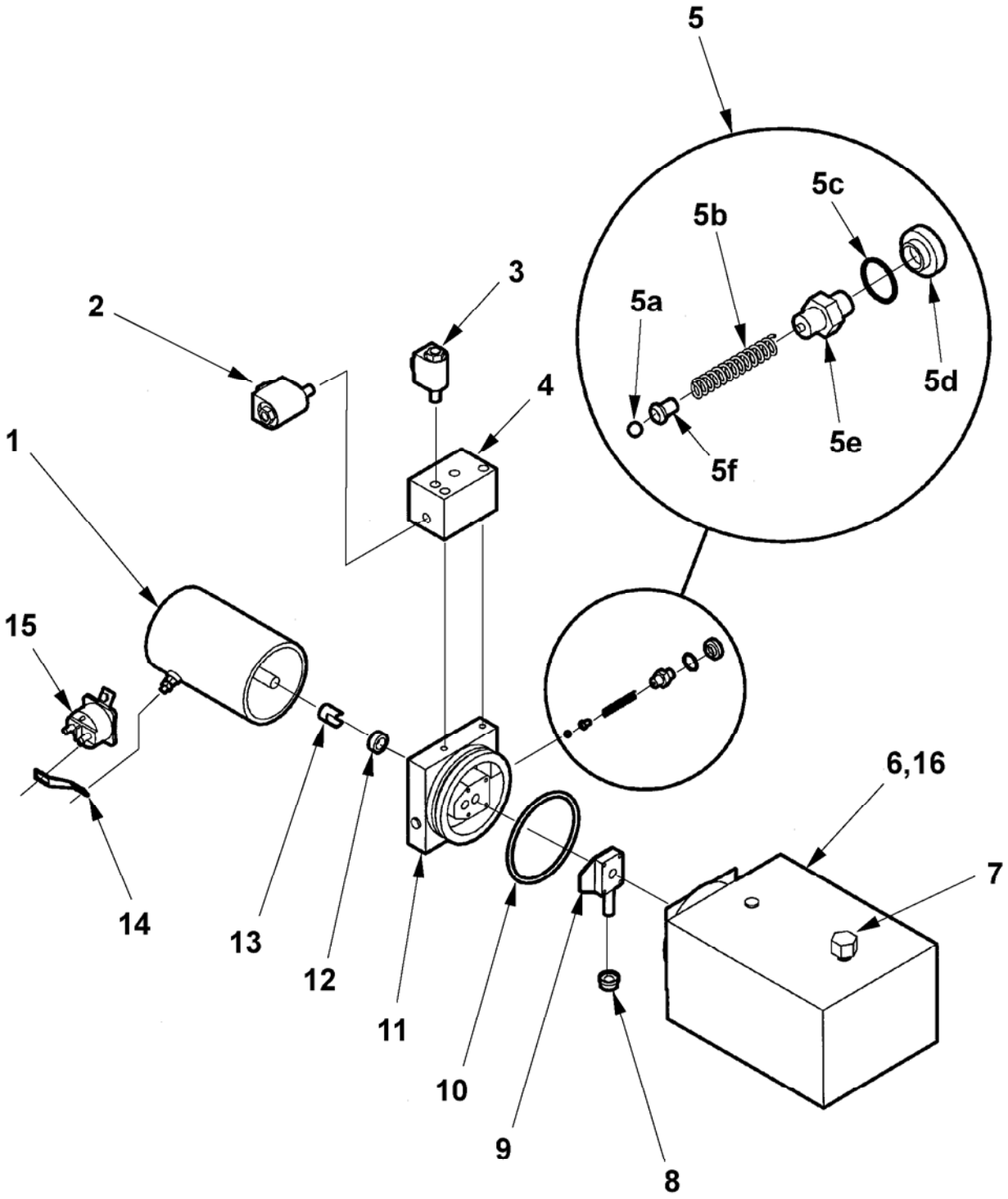

MAXON®
11921 Slauson Ave. Santa Fe Springs, CA. 90670 (800) 227-4116 FAX (888) 771-7713

PUMP, HYDRAULIC CLOSER
P/N 262256

ITEM	QTY.	PART NO.	DESCRIPTION
1	1	250093	HEAVY DUTY MOTOR, 12 VDC
2	1	260276	VALVE, SOLENOID 4-WAY
*2a	1	226595	O-RING KIT, 4-WAY VALVE
3	1	253353	VALVE, SOLENOID 2-WAY
*3a	1	226594	O-RING KIT, 2-WAY VALVE
4	1	260275	MANIFOLD BLOCK ASSEMBLY
5	1	260229	RELIEF VALVE KIT
5a	1	260230	STEEL BALL
5b	1	260231	SPRING
5c	1	260235	O-RING
5d	1	260234	VALVE CAP
5e	1	260232	ADJUSTING SCREW
5f	1	260233	SPRING GUIDE
6	1	261106	RESERVOIR, 2.5 GAL. W/.75 BREATHER
7	1	260847	FILLER/BREATHER CAP
8	1	260250	FILTER
9	1	260236	PUMP ASSEMBLY
10	1	251884	O-RING
11	1	260274	DRIVEPLATE ASSEMBLY, 5"
12	1	260261	OIL SEAL
13	1	229200	COUPLING
14	1	262966	BUS BAR
15	1	262939	SOLENOID SWITCH
*16	4	229202	CAPSCREW, HEX HD. WASHER

MAXON® 11921 Slauson Ave. Santa Fe Springs, CA. 90670 (800) 227-4116 FAX (888) 771-7713

FOLDING PLATFORM VARIATIONS

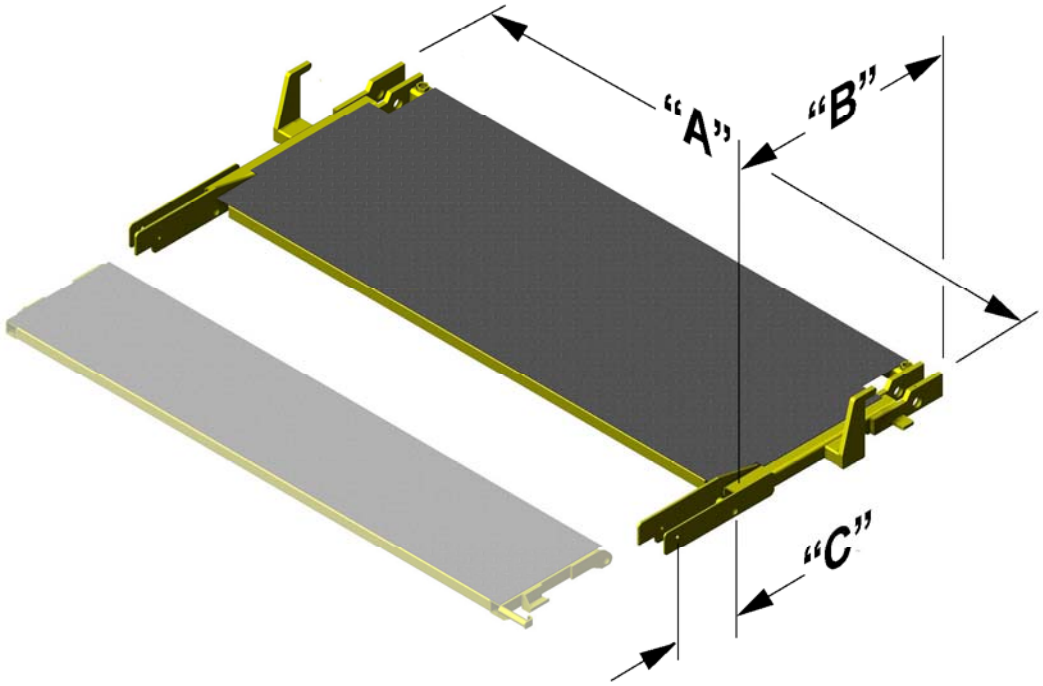

RC-2B, RC-3B, RC-4B

MODEL	96" WIDE VEHICLE	96" WIDE VEHICLE (W/36"+ F/S)	96" WIDE VEHICLE	96" WIDE VEHICLE (W/36"+ F/S)
PART NO.	229330-01	229330-02	229330-03	229330-04
DIM. "A"	95-3/8"			
DIM. "B"	36"		42"	
DIM. "C"	10"	14"	10"	14"
MODEL	102" WIDE VEHICLE	102" WIDE VEHICLE (W/36"+ F/S)	102" WIDE VEHICLE	102" WIDE VEHICLE (W/36"+ F/S)
PART NO.	229330-05	229330-06	229330-07	229330-08
DIM. "A"	101-3/8"			
DIM. "B"	36"		42"	
DIM. "C"	10"	14"	10"	14"
MODEL	90" WIDE VEHICLE	90" WIDE VEHICLE (W/36"+ F/S)	90" WIDE VEHICLE	90" WIDE VEHICLE (W/36"+ F/S)
PART NO.	229330-09	229330-10	229330-11	229330-12
DIM. "A"	88-5/8"			
DIM. "B"	36"		42"	
DIM. "C"	10"	14"	10"	14"

RC-5B, RC-6B, RC-6K

MODEL	96" WIDE VEHICLE	96" WIDE VEHICLE (W/36"+ F/S)	96" WIDE VEHICLE	96" WIDE VEHICLE (W/36"+ F/S)
PART NO.	229331-01	229331-02	229331-03	229331-04
DIM. "A"	95-3/8"			
DIM. "B"	36"		42"	
DIM. "C"	10"	14"	10"	14"
MODEL	102" WIDE VEHICLE	102" WIDE VEHICLE (W/36"+ F/S)	102" WIDE VEHICLE	102" WIDE VEHICLE (W/36"+ F/S)
PART NO.	229331-05	229331-06	229331-07	229331-08
DIM. "A"	101-3/8"			
DIM. "B"	36"		42"	
DIM. "C"	10"	14"	10"	14"
MODEL	90" WIDE VEHICLE	90" WIDE VEHICLE (W/36"+ F/S)	90" WIDE VEHICLE	90" WIDE VEHICLE (W/36"+ F/S)
PART NO.	229331-09	229331-10	229331-11	229331-12
DIM. "A"	88-5/8"			
DIM. "B"	36"		42"	
DIM. "C"	10"	14"	10"	14"

MAXON® 11921 Slauson Ave. Santa Fe Springs, CA. 90670 (800) 227-4116 FAX (888) 771-7713

FOLD OVER SECTION VARIATIONS

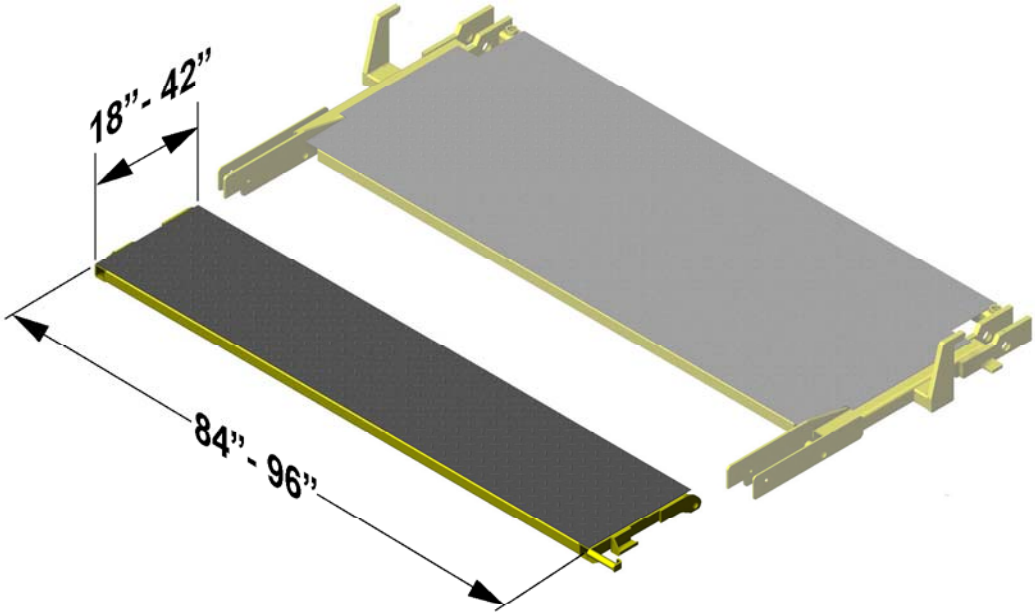

RC-2B, RC-3B, RC-4B

96" WIDE VEHICLE		102" WIDE VEHICLE		90" WIDE VEHICLE	
FOLDOVER SIZE	PART NO.	FOLDOVER SIZE	PART NO.	FOLDOVER SIZE	PART NO.
90" x 18"	229334-01	96" x 18"	229334-06	84" x 18"	229334-11
90" x 24"	229334-02	96" x 24"	229334-07	84" x 24"	229334-12
90" x 30"	229334-03	96" x 30"	229334-08	84" x 30"	229334-13
90" x 36"	229334-04	96" x 36"	229334-09	84" x 36"	229334-14
90" x 42"	229334-05	96" x 42"	229334-10	84" x 42"	229334-15

RC-5B, RC-6B, RC-6K

96" WIDE VEHICLE		102" WIDE VEHICLE		90" WIDE VEHICLE	
FOLDOVER SIZE	PART NO.	FOLDOVER SIZE	PART NO.	FOLDOVER SIZE	PART NO.
90" x 18"	229335-01	96" x 18"	229335-06	84" x 18"	229335-11
90" x 24"	229335-02	96" x 24"	229335-07	84" x 24"	229335-12
90" x 30"	229335-03	96" x 30"	229335-08	84" x 30"	229335-13
90" x 36"	229335-04	96" x 36"	229335-09	84" x 36"	229335-14
90" x 42"	229335-05	96" x 42"	229335-10	84" x 42"	229335-15

MAXON® 11921 Slauson Ave. Santa Fe Springs, CA. 90670 (800) 227-4116 FAX (888) 771-7713

ONE-PIECE PLATFORM VARIATIONS
(CAM TYPE)

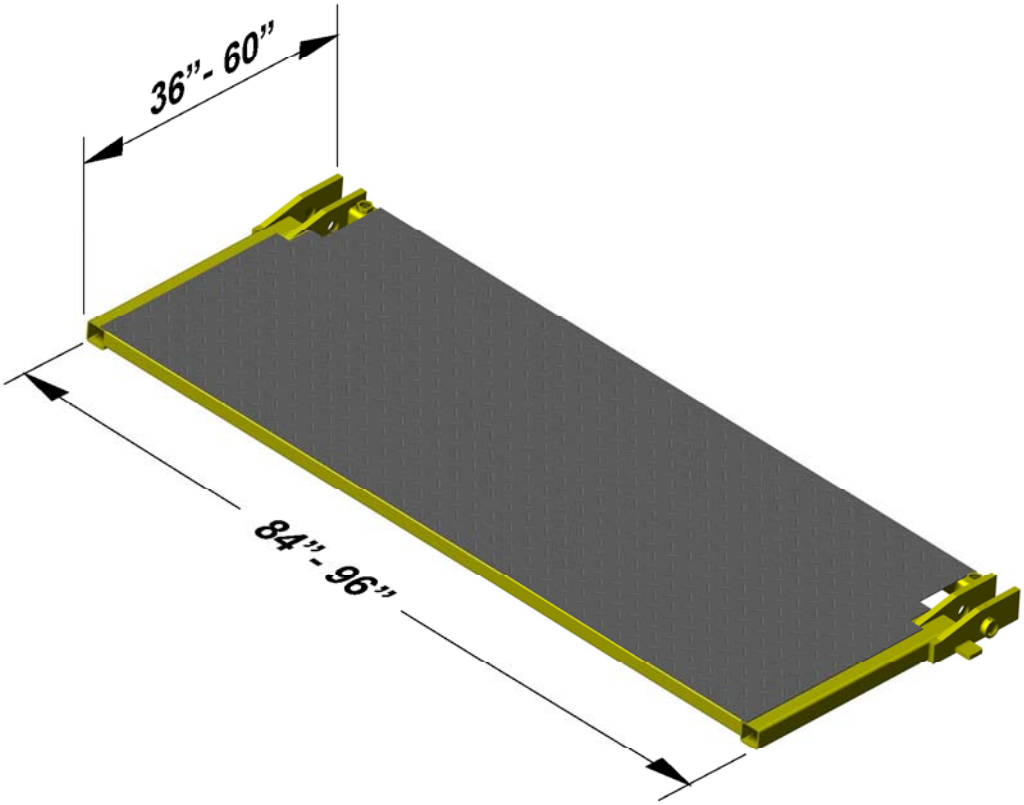

96" WIDE VEHICLE		102" WIDE VEHICLE		90" WIDE VEHICLE	
PLATFORM SIZE	PART NO.	PLATFORM SIZE	PART NO.	PLATFORM SIZE	PART NO.
90" x 36"	229336-01	96" x 36"	229336-05	84" x 36"	229336-09
90" x 42"	229336-02	96" x 42"	229336-06	84" x 42"	229336-10
90" x 48"	229336-03	96" x 48"	229336-07	84" x 48"	229336-11
90" x 60"	229336-04	96" x 60"	229336-08	84" x 60"	229336-12

MAXON® 11921 Slauson Ave. Santa Fe Springs, CA. 90670 (800) 227-4116 FAX (888) 771-7713

RC/RCT HYDRAULIC CLOSER COMPONENTS

ALL OTHER PARTS NOT SHOWN ARE STANDARD RC COMPONENTS

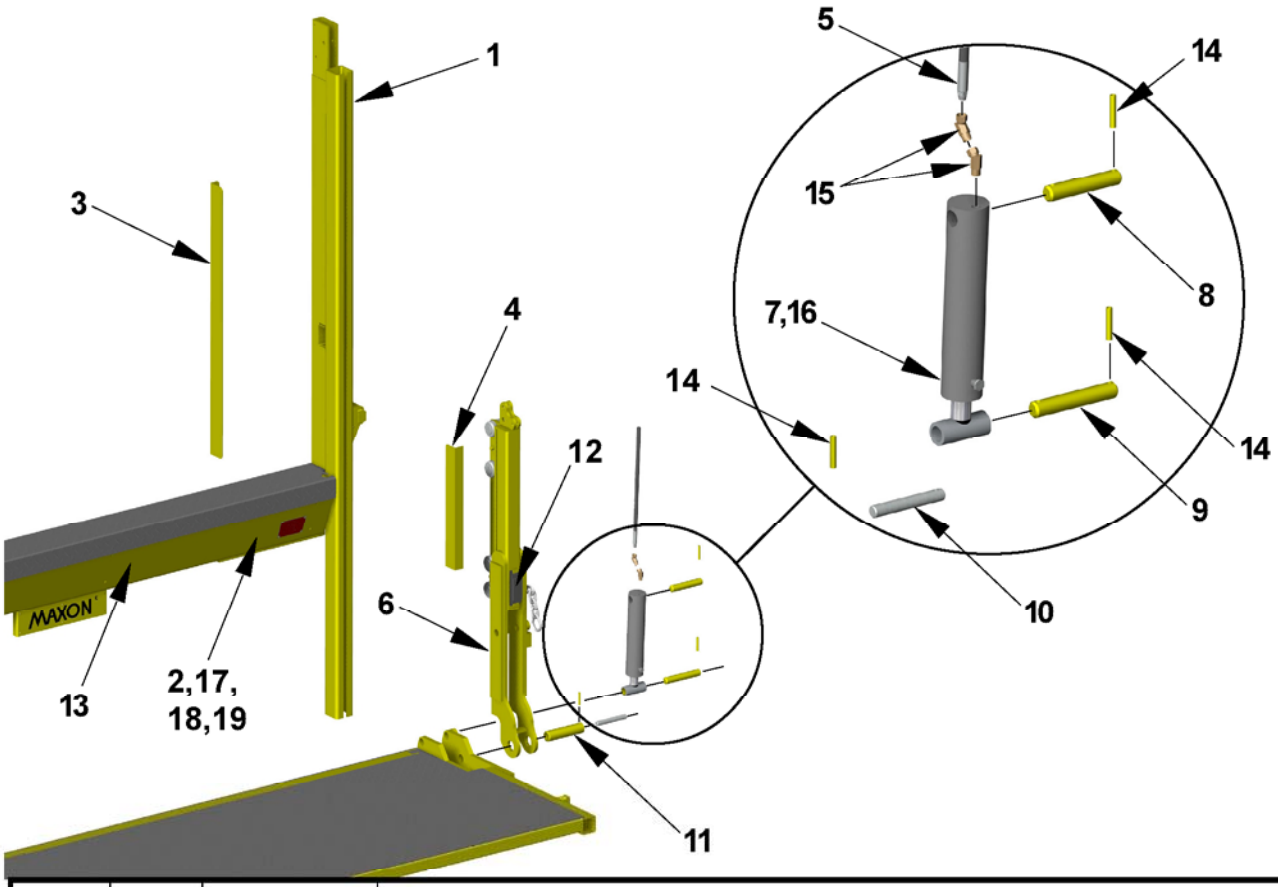

ITEM	QTY.	PART NO.	DESCRIPTION
1	1	250912-01	MAIN FRAME COLUMN ASSEMBLY 96" WIDE RC-2B, RC-3B
		250912-06	MAIN FRAME COLUMN ASSEMBLY 102" WIDE RC-2B, RC-3B
		250914-01	MAIN FRAME COLUMN ASSEMBLY 96" WIDE RC-4B
		250914-05	MAIN FRAME COLUMN ASSEMBLY 102" WIDE RC-4B
		250908-01	MAIN FRAME COLUMN ASSEMBLY 96" WIDE RC-5B, RC-6B
		250908-05	MAIN FRAME COLUMN ASSEMBLY 102" WIDE RC-5B, RC-6B
2	1	253038	CHANNEL REMOTE CONTROL
3	1	227369	GUIDE, HOSE, MAINFRAME
4	1	227370-01	GUIDE, HOSE, RUNNER RC-2B, RC-3B
		227370-02	GUIDE, HOSE, RUNNER RC-4B
		227370-03	GUIDE, HOSE, RUNNER RC-5B, RC-6B

LIST CONTINUES ON NEXT PAGE

MAXON® 11921 Slauson Ave. Santa Fe Springs, CA. 90670 (800) 227-4116 FAX (888) 771-7713

RC/RCT HYDRAULIC CLOSER COMPONENTS

ITEM	QTY.	PART NO.	DESCRIPTION
5	1	800235-32	HOSE ASSEMBLY, 120" LONG
6	1	227334	RUNNER ASSEMBLY, RIGHT SIDE RC-2B, RC-3B
		227339	RUNNER ASSEMBLY, RIGHT SIDE RC-4B
		227342	RUNNER ASSEMBLY, RIGHT SIDE RC-5B, RC-6B
7	1	222214	CYLINDER, 2" X 8"
8	1	073505	PIN, CYLINDER, UPPER, 5-1/4" LONG
9	2	070165	PIN, CYLINDER, LOWER, 6" LONG
10	1	221905-01	PIN, 5-1/8" LONG
11	1	222328	PIN, HINGE, 6" LONG
12	1	227664	RUBBER BUMPER
13	1	226201	COVER, MAINFRAME 96" WIDE RC-2B, RC-3B, RC-4B
		226200	COVER, MAINFRAME 102" WIDE RC-2B, RC-3B, RC-4B
		226458	COVER, MAINFRAME 96" WIDE RC-5B, RC-6B
		226460	COVER, MAINFRAME 102" WIDE RC-5B, RC-6B
14	5	221416	ROLL PIN, 3/8" X 2" LONG
15	2	227381	SWIVEL ELBOW, 45, 1/4"F X 1/4"M
16	1	226568	SEAL KIT, HYDRAULIC CYLINDER, 2 X 8
17	1	250878	SWITCH MOUNTING PLATE
18	1	250994	DECAL P/F CLOSER
19	2	252427	ELECT. SWITCH & HARNESS
20	1	253038	CHANNEL REMOTE CONTROL

MAXON®
11921 Slauson Ave. Santa Fe Springs, CA. 90670 (800) 227-4116 FAX (888) 771-7713