TrailMaster

TrailMaster Dune Buggy
KX-300
PARTS MANUAL

Version: 1.0 (02/20/2026)

FRAME COMP

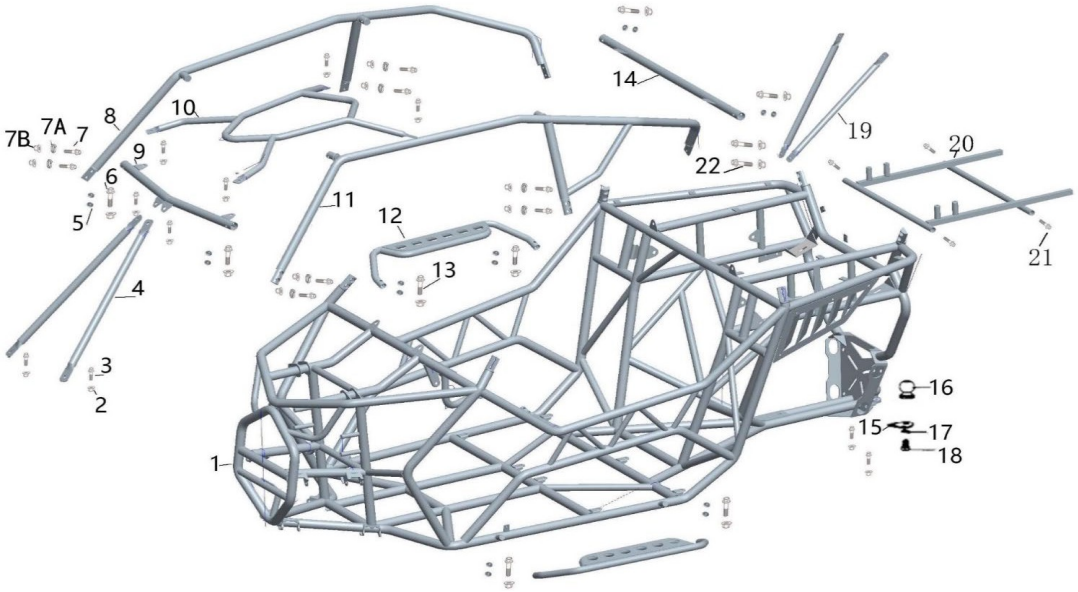

NO.	PARTS NO.	PART NAME	QTY
1-1	57100-300B-300	FRAME COMP.(R.S.B)	1
1-2	61870800012505	M8 Flange Lock Nut (GB6187)	16
1-3	57870802012505	M8×20 Flange Bolt (GB5787)	10
1-4	58021-300B	Front Tie Rod	2
1-5	8010047250G000	R Washer (Flat Washer)	16
1-6	57870805512505	M8×55 Flange Bolt (GB5787)	6
1-7	70000802512505	M8×25 Socket Head Cap Screw (GB70)	12
1-7B	98500800012505	M8 Nylon Insert Lock Nut (DIN985)	12
1-8	58120-300B	Right Roof Frame Assembly	1
1-9	58140-300B	Front Roof Frame	1
1-10	58170-300B	Roof Frame Assembly	1
1-11	58110-300B	Left Roof Frame Assembly	1
1-12	58160-300B	Footrest Assembly	2
1-13	57870805012505	M8×50 Flange Bolt (GB5787)	4
1-14	58130-300B	Rear Roof Frame	1
1-15	8020023250GH00	Trailer Hitch Mounting Plate	1
1-16	8010084250G000	Trailer Hitch Ball	1
1-17	93001600000005	Φ16 Spring Washer (GB93)	1
1-18	57831602520005	M16×2×25 Hex Head Bolt	1
1-19	58022-300B	Rear Tie Rod	2
1-20	58150-300B	Fuel Tank Bracket	1
1-21	57870801612505	M8×16 Flange Bolt (GB5787)	4
1-22	57870802512505	M8×25 Flange Bolt (GB5787)	2

BRAKE / THROTTLE PEDAL

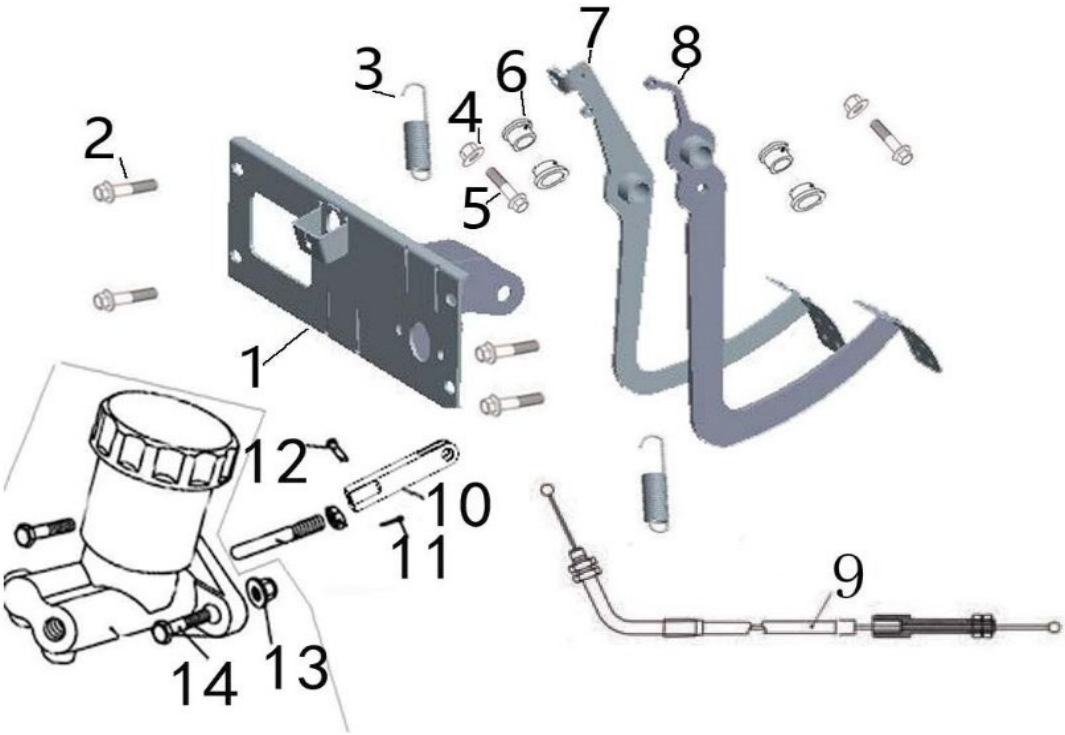

NO.	PARTS NO.	PART NAME	QTY
4-1	40110-300B	Brake & Throttle Mounting Bracket	1
4-2	57870801612505	M8×16 Flange Bolt (GB5787)	4
4-3	58276-K5	Throttle Return Spring	2
4-4	61871200012505	M12×1.25 Lock Nut (GB6187)	2
4-5	57871206012505	M12×1.25×60 Flange Bolt (GB5789)	2
4-6	7010003	Nylon Bushing (Plastic) Φ12×Φ16-12	4
4-7	40120-300B	Throttle Pedal Assembly	1
4-8	40130-300B	Brake Pedal Assembly	1
4-9	60110-KXE	EFI Throttle Cable	1
4-10	44021-KX	Push Pin Bracket	1
4-11	GB912001600005	Φ2×16 Cotter Pin (GB91)	1
4-12	GB918001800005	Φ8×18 Pin (GB91)	1
4-13	61870800012505	M8 Lock Nut (GB6187)	2
4-14	57870803012505	M8×30 Flange Bolt (GB5787)	2

STEERING WHEEL

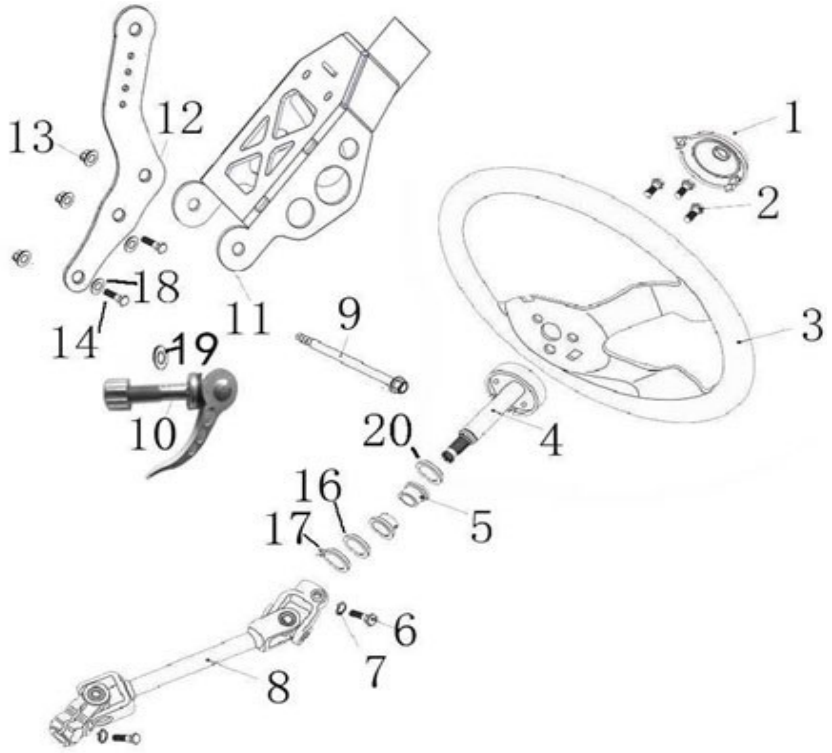

NO.	PARTS NO.	PART NAME	QTY
5-1	7010041250G000	Steering Wheel Bolt Cover	1
5-2	57890601210005	M6×12 Hex Head Bolt (GB5789)	3
5-3	7020038250G000	Steering Wheel	1
5-4	40140-300B	Steering Column Mounting Post	1
5-5	NK202820	Needle Roller Bearing NK202820	2
5-6	57820803012505	M8×30 Hex Head Bolt (GB5782)	2
5-7	93000800000005	Φ8 Spring Washer (GB93)	2
5-8	40200-150U	Steering Telescopic Shaft Assembly	1
5-9	57890810512505	M8×105 Flange Bolt (GB5789)	1
5-10	40030-KX	Adjustment Bolt	1
5-11	40270-300B	Steering Adjustment Bracket Welded Assembly	1
5-12	40272-KX	Adjustment Plate	1
5-13	61870800012505	M8 Lock Nut (GB6187)	3
5-14	57890802012505	M8×20 Flange Bolt (GB5789)	2
5-16	40001-K5	Washer Φ20×Φ28-1	1
5-17	89402000000005	Shaft Retaining Ring Φ20 (GB894)	1
5-18	40009-300B	Rubber Washer Φ8×Φ30-2	4
5-19	40008-300B	Washer Φ8×Φ30-2	1
5-20	40007-300B	Nylon Washer Φ20×Φ34-3	2

STEERING GEAR

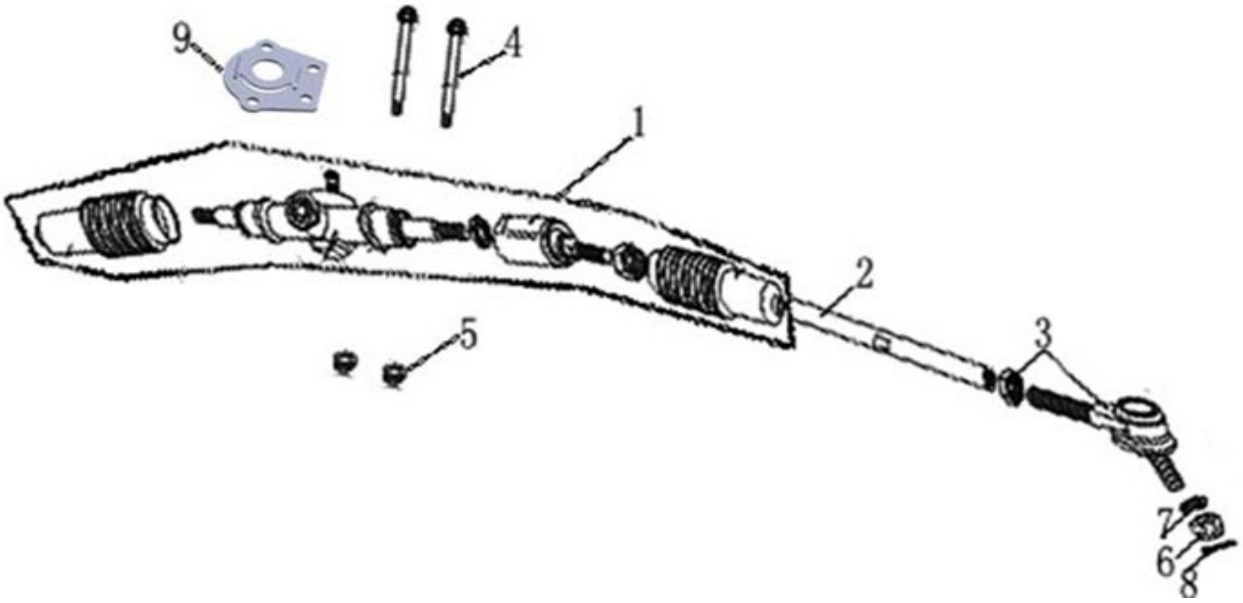

NO.	PARTS NO.	PART NAME	QTY
6-1	40310-KX	8001 Steering Gearbox Assembly	1
6-2	ST-D013-02-00	Left Steering Adjustment Rod (L = 390 mm)	2
6-3	4030300150U002	Outer Tie Rod End	2
6-4	57890806512505	M8×65 Flange Bolt (GB5789)	4
6-5	61870800012505	M8 Lock Nut (GB6187)	4
6-6	94571000012505	M10×1.25 Castle Nut (GB9457)	2
6-7	93001000000005	Φ10 Spring Washer (GB93)	2
6-8	GB912502500005	Φ2.5×25 Cotter Pin (GB91)	2
6-9	58010-300B	Steering Clamp Plate Assembly	1

SPINDLE AND STRUT SUPPORT

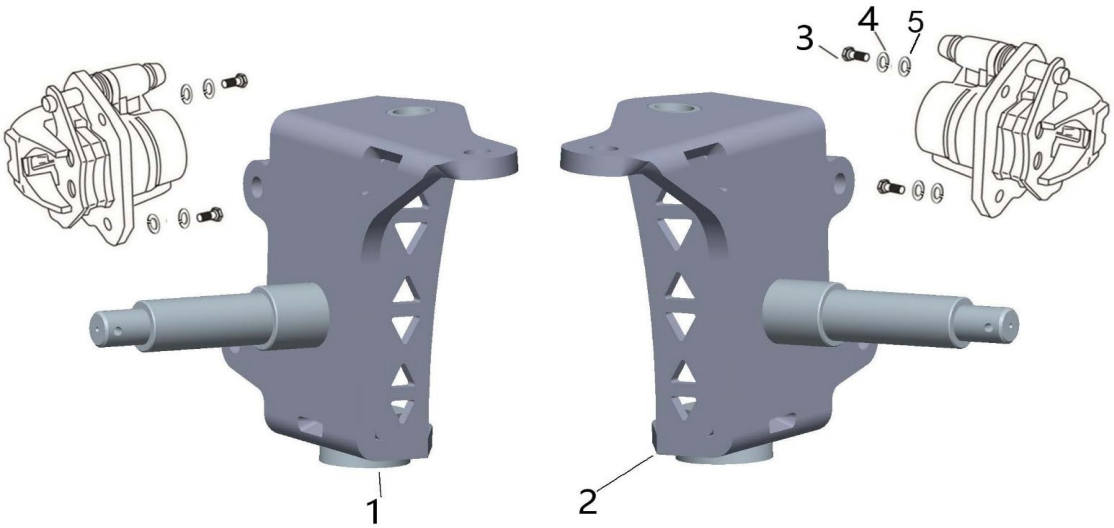

NO.	PARTS NO.	PART NAME	QTY
7-1	44220-300B	SPINDLE AND STRUT SUPPORT,R	1
7-2	44210-300B	SPINDLE AND STRUT SUPPORT,L	1
7-3	57870802012505	M8×20 Flange Bolt (GB5787)	4
7-4	97000800000005	Φ8 Flat Washer (GB97)	4
7-5	93000800000005	Φ8 Spring Washer (GB93)	4

SUSPENSION ARM

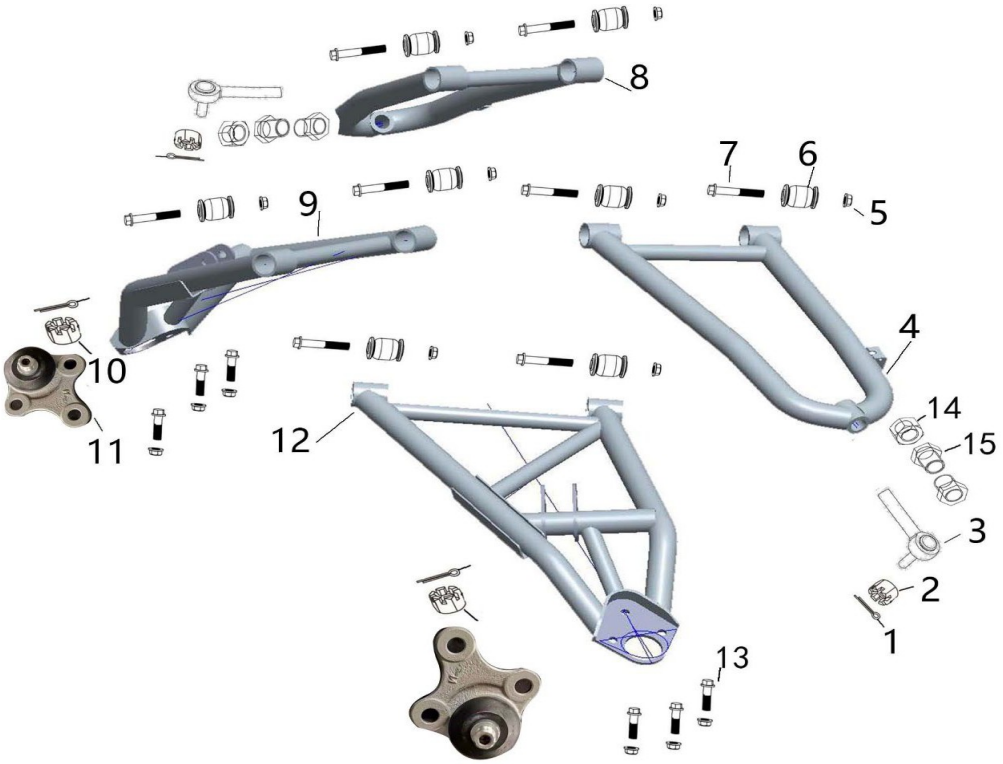

NO.	PARTS NO.	PART NAME	QTY
8-1	GB913003000005	Φ3×30 Cotter Pin (GB91)	4
8-2	94571200012505	M12×1.25 Castle Nut (GB9457)	2
8-3	44310-300B	LINKAGE KNUCKLE	2
8-4	44240-300B	UPPER SUSPENSION ARM(L)	2
8-5	61871000012505	M10×1.25 Lock Nut (GB6187)	14
8-6	58720N	Bushing Sleeve	8
8-7	57891007512505	M10×1.25×75 Flange Bolt (GB5789)	8
8-8	44260-300B	UPPER SUSPENSION ARM(R)	4
8-9	44250-300B	Lower suspension arm(R)	6
8-10	61871200015005	M12×1.5 Lock Nut (Included with Control Arm)	2
8-11	44320-300B	LINKAGE KNUCKLE	2
8-12	44230-300B	Lower suspension arm(L)	1
8-13	57891003012505	M10×1.25×30 Flange Bolt (GB5789)	6
8-14	61871600015005	M16×1.5 Lock Nut (GB6187)	2
8-15	58301-K5	M16×1.5 Threaded Sleeve	4

CUSHION ASSY.,FR

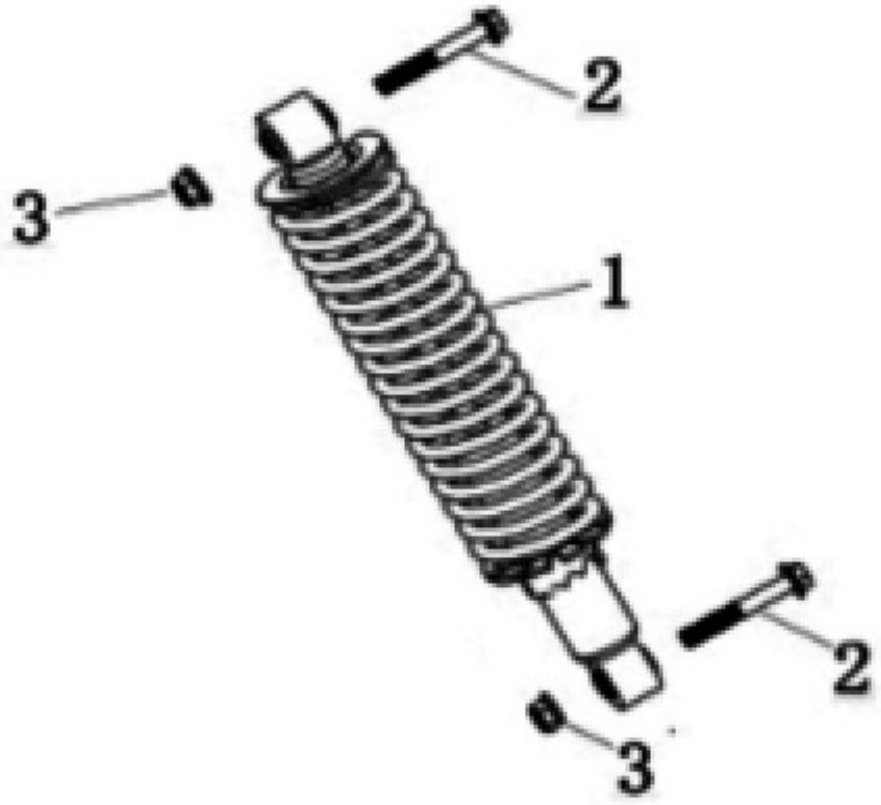

NO.	PARTS NO.	PART NAME	QTY
9-1	43100-300B	CUSHION ASSY.FR（L=600)	2
9-2	57891005512505	GB5789 FLANGE BOLT M10*55*1.25	4
9-3	61871000012505	GB6187 LOCKING FLANGE UNT.M10*1.25	4

FR.WHEEL ASSY/FRONT WHEEL HUB

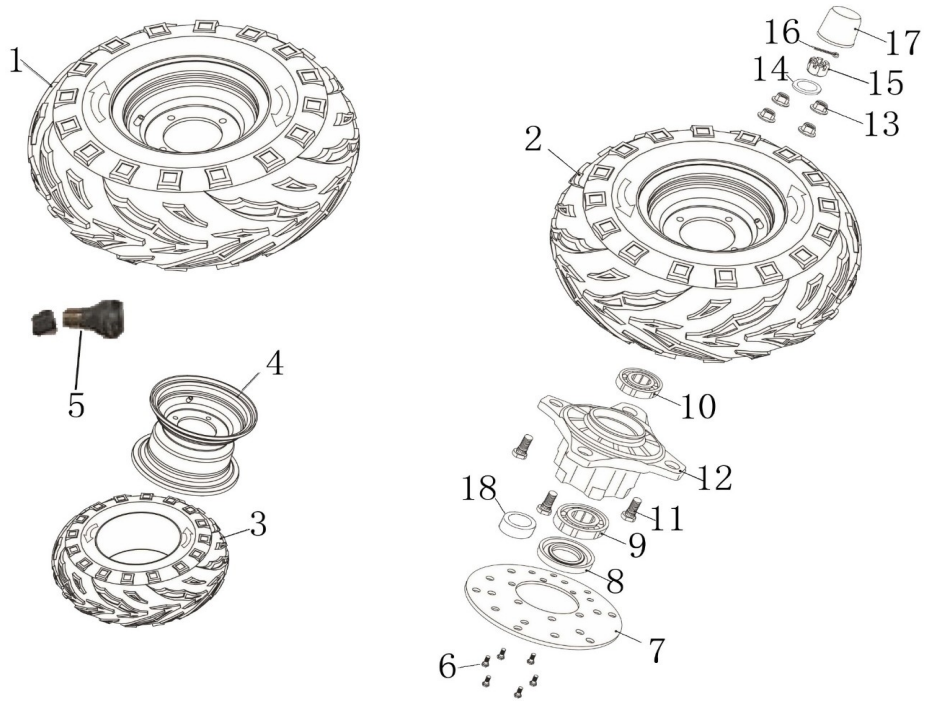

NO.	PARTS NO.	PART NAME	QTY
10-1	44100-300B	Left Front Wheel Assembly	1
10-2	44200-300B	Right Front Wheel Assembly	1
10-3	440310-300B	25×8-12 Front Tire	2
10-4	44110-300B	Front Steel Rim	2
10-5	7190018250G000	TIRE NIPPLE	2
10-6	57830601610005	M6×16 Hex Bolt (GB5783)	12
10-7	8010054-K7	Front Brake Disc	2
10-8	YF047002500700	47×25×7 Oil Seal	2
10-9	62042RS0000000	6204-2RS Bearing	2
10-10	62042RS0000000	6204-2RS Bearing	2
10-11	9710039250G100	M10×1.25×35 Tire Bolt	8
10-12	8010085-K7	Front Wheel Hub	2
10-13	8010118250G501	M10×1.25 Tire Nut	8
10-14	97001400000005	Φ14 Flat Washer (GB97)	2
10-15	94571400015005	M14×1.5 Castle Nut (GB9457)	2
10-16	GB913003000005	Φ3×30 Cotter Pin (GB91)	2
10-17	44005-300B	Hub Cap	2
10-18	44002-K5	Φ21×Φ25-24.5 Front Wheel Spacer	2

FUEL TANK

NO.	PARTS NO.	PART NAME	QTY
11-1	51001-K5	Vent Valve Hose	1
11-2	51010-K5	One-Way Vent Valve	1
11-3	50010-K5E	EFI Fuel Tank	1
11-4	6000145-K5	EPA Fuel Tank Cap	1
11-5	57870806012505	M8×60 Flange Bolt (GB5787)	4
11-6	8010034250G000	Fuel Tank Liner Tube	4
11-7	7020005250G000	RUBBER MOUNT	4
11-8	80303-300UE	EFI Fuel Hose Assembly	1
11-9	50300-K5E	RBS-48DA EFI Fuel Pump Assembly	1
11-10	57890501200005	M5×12 Flange Bolt (GB5789)	6

SAFETY BELT ASSY/SEAT COMP

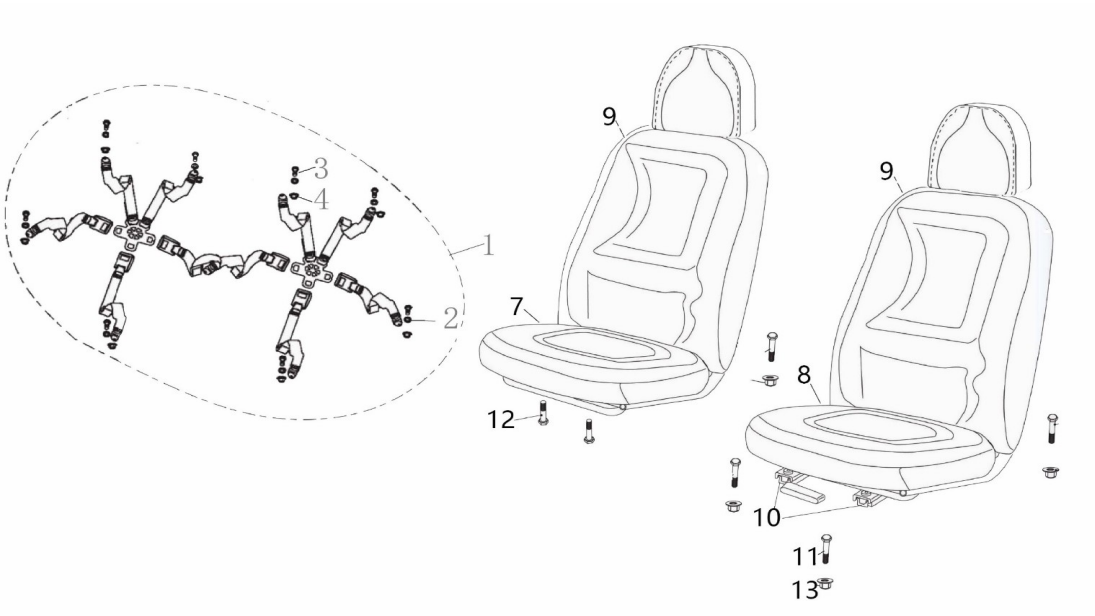

NO.	PARTS NO.	PART NAME	QTY
12-1	51200-K5	SAFETY BELT ASSY	2
12-2	51002-K5	SAFETY BELT SPECIAL BOLT	5
12-5	51220-K5	SAFTY BELT,HOOK	2
12-6	51210-K5	SAFTY BELT	2
12-7	51100-300B	SEAT COMP.R	1
12-8	51200-300B	SEAT RALL SET	1
12-9	51300-300B	SEAT back	2
12-10	51220-300B	DRIVER SEAT SLIDER	2
12-11	33700802012505	BOLT M8*20,GB337	8
12-13	61870800012505	NUT M8 GB6187	8

Hanger

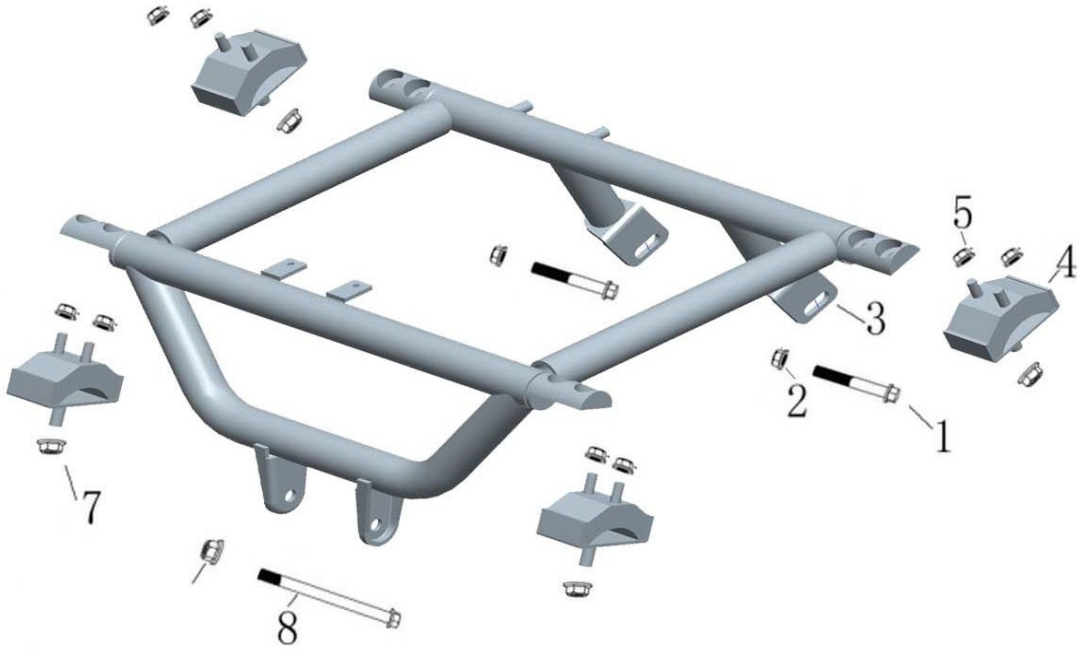

NO.	PARTS NO.	PART NAME	QTY
13-1	57891005012505	BOLT M10*1.25*50 ,GB5789	1
13-2	61871000012505	LOCKING NUT M10*1.25，GB6187	7
13-3	58110-K7X	hanger	1
13-4	10170-300UB1	Shock absorbing seat	4
13-5	61870800012505	NUT M8, GB6187	8
13-8	57891011012505	BOLT M10*1.25*110 ,GB5789	1

PARKING BRAKE LEVER ASSY/SHIFTER HOISE ASSY

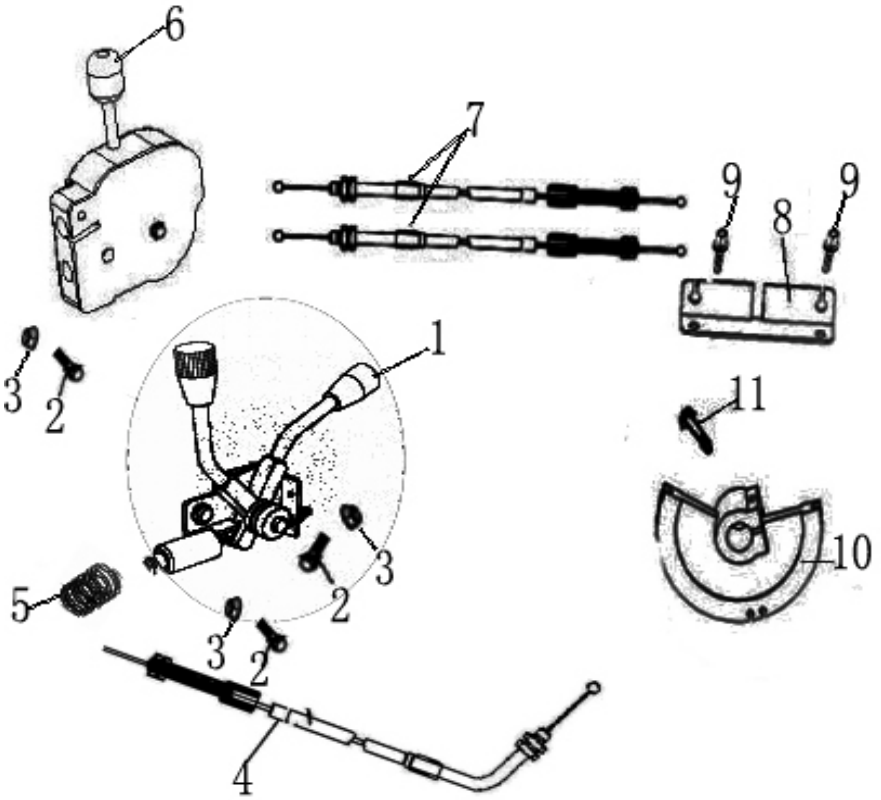

NO.	PARTS NO.	PART NAME	QTY
14-1	60210-K5	PARKING BRAKE LEVER ASSY.	1
14-2	57870801612505	BOLT M8*16 ,GB5787	3
14-3	61870800012505	NUT M8,GB6187	3
14-4	60010-KX-300	PARKING BRAKE CABLE COMP.	1
14-5	60012-K5	PARKING BRAKE CABLE SPRING	1
14-6	40700-150U	SHIFTER HOISE ASSY.	1
14-9	60130-300U-24	REVERSE CABLE COMP.(3M)	2
14-10	60011-K5	REVERSE CABLE FIXED PLATE	1
14-17	57890601210005	BOLT M6*12 ,GB5789	2
14-18	40002-K5	SHIFTER DISK	1
14-19	57830602510005	BOLT M6*25 ,GB5783	1

Drive shaft fixing seat

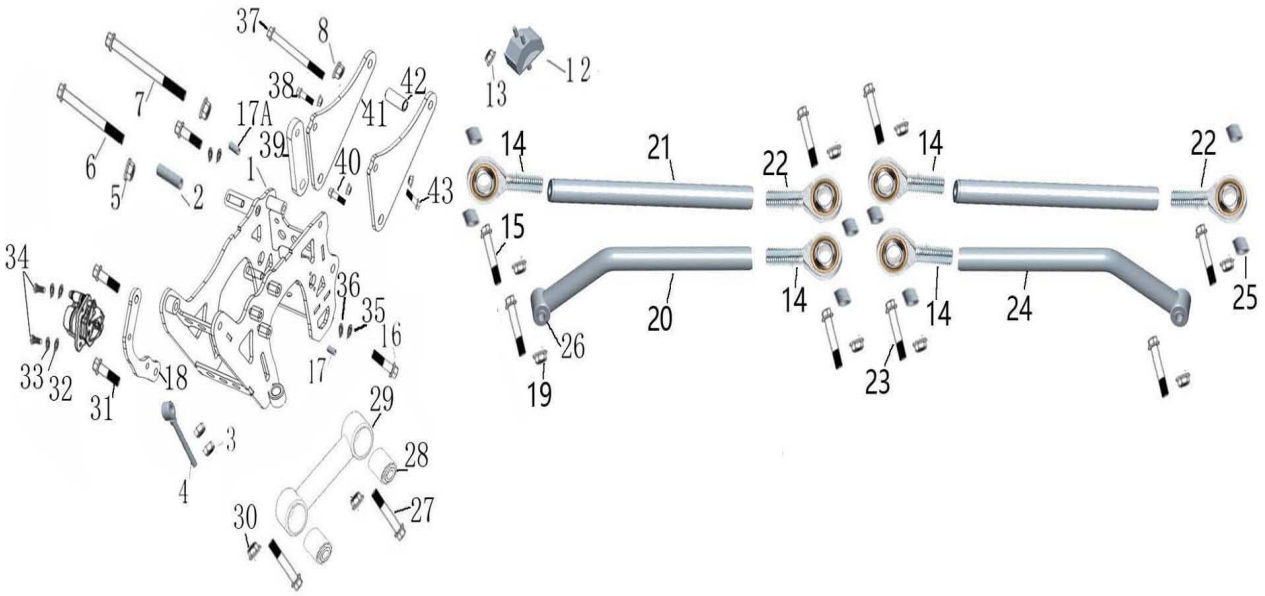

NO.	PARTS NO.	PART NAME	QTY
15-1	10130-K7X	Drive shaft fixing seat	1
15-2	10101-300UB	DRIVE SHAFT FIXED COLLAR	1
15-3	61701400015005	NUT M14*1.5,GB6170	4
15-4	58610-300U	ENGINE MOUNT BOLT PLATE	1
15-5	61871000012505	LOCKING NUT M10*1.25，GB6187	2
15-6	57891013012505	BOLT M10*1.25*130 ,GB5789	1
15-7	57891016012505	BOLT M10*1.25*160 ,GB5789	1
15-8	61870800012505	LOCKING NUT M8，GB6187	3
15-12	10170-300UB1	Shock absorbing seat	1
15-13	61870800012505	LOCKING NUT M8，GB6187	2
15-14	54350K-300B	SA14T/K M14×1.5 Rod End Bearing (with Hex Nut)	4
15-15	57891406515005	M14×1.5×65 Flange Bolt (GB5789)	4
15-16	57891203512505	M12×1.25×35 Flange Bolt (GB5789)	2
15-17	10131-300UB1	Φ12×Φ18-6.5 Spacer	1
15-17A	10146-K7X	Φ12×Φ18-12.5 Spacer	1
15-18	10145-K7X	Brake Mounting Plate	1
15-19	61871400015005	M14×1.5 Lock Nut (GB6187)	8
15-20	54320-300B	Rear Swing Arm Left Lower Link Assembly	1
15-21	54310-300B	Rear Swing Arm Upper Link Assembly	2
15-22	54360K-300B	SA14T/K M14×1.5 Rod End Bearing (Left-Hand Thread)	2
15-23	57891406515005	M14×1.5×65 Flange Bolt (GB5789)	4
15-24	54330-300B	Rear Swing Arm Right Lower Link Assembly	1
15-25	54315-300B	Φ14×Φ20-11 Rear Link Bushing	8
15-26	54350-300B	14×35×35/41 Cushion Bushing	2
15-27	57871206012505	M12×1.25×60 Flange Bolt (GB5787)	2
15-28	54350-K7X	12×30×30/35 Cushion Bushing	2
15-29	58950-300B	Hanger Connecting Rod	1
15-30	61871200012505	M12×1.25 Lock Nut (GB6187)	3
15-31	57891002012505	M10×1.25×20 Flange Bolt (GB5789)	2
15-32	97000800000005	Φ8 Flat Washer (GB97)	4
15-33	93000800000005	Φ8 Spring Washer (GB93)	4
15-34	57870801612505	M8×16 Flange Bolt (GB5787)	4

Drive shaft fixing seat

15-35	97001000000005	Φ10 Flat Washer (GB97)	4
15-36	93001000000005	Φ10 Spring Washer (GB93)	2
15-37	57870815012505	M8×150 Flange Bolt (GB5787)	1
15-38	57870804012505	M8×40 Flange Bolt (GB5787)	1
15-39	10164-K7X	Drive Shaft Mounting Plate 12	1
15-40	57871204012505	M12×1.25×40 Flange Bolt (GB5787)	1
15-41	10161-K7X	Connecting Plate	2
15-42	10165-K7X	Spacer 6	1
15-43	57870802512505	M8×25 Flange Bolt (GB5787)	1

CUSHION ASSY. RR

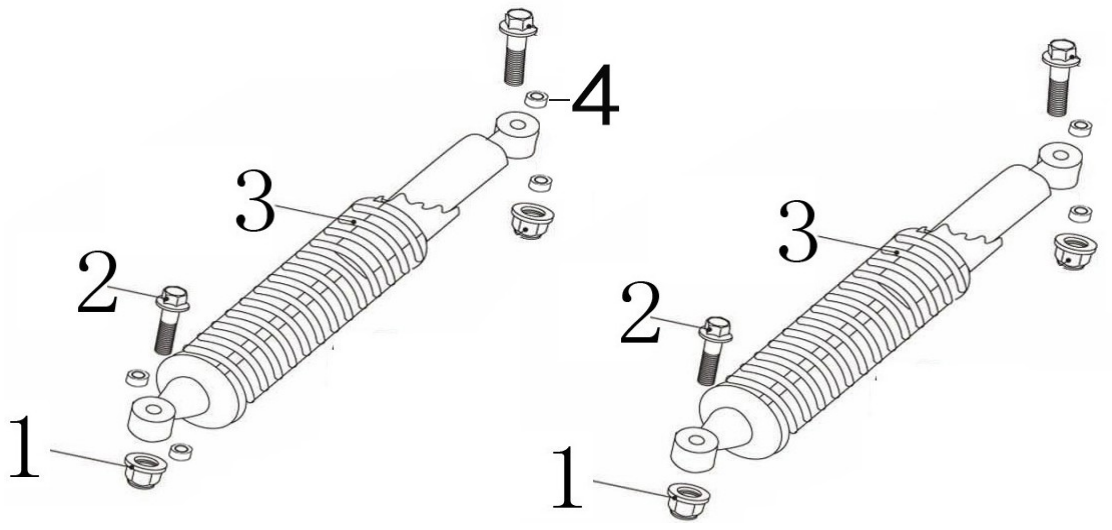

NO.	PARTS NO.	PART NAME	QTY
16-1	61871000012505	LOCKING FLANGE NUT M10*1.25,GB6187	4
16-2	57891006012505	FLANGE BOLT M10*1.25*60,GB5789	4
16-3	63100-300B	CUSHION ASSY. RR	2
16-4	10131-300UB1	Spacer Φ12*Φ18-6.5	8

Engine Assy/Muffler Comp. Ex

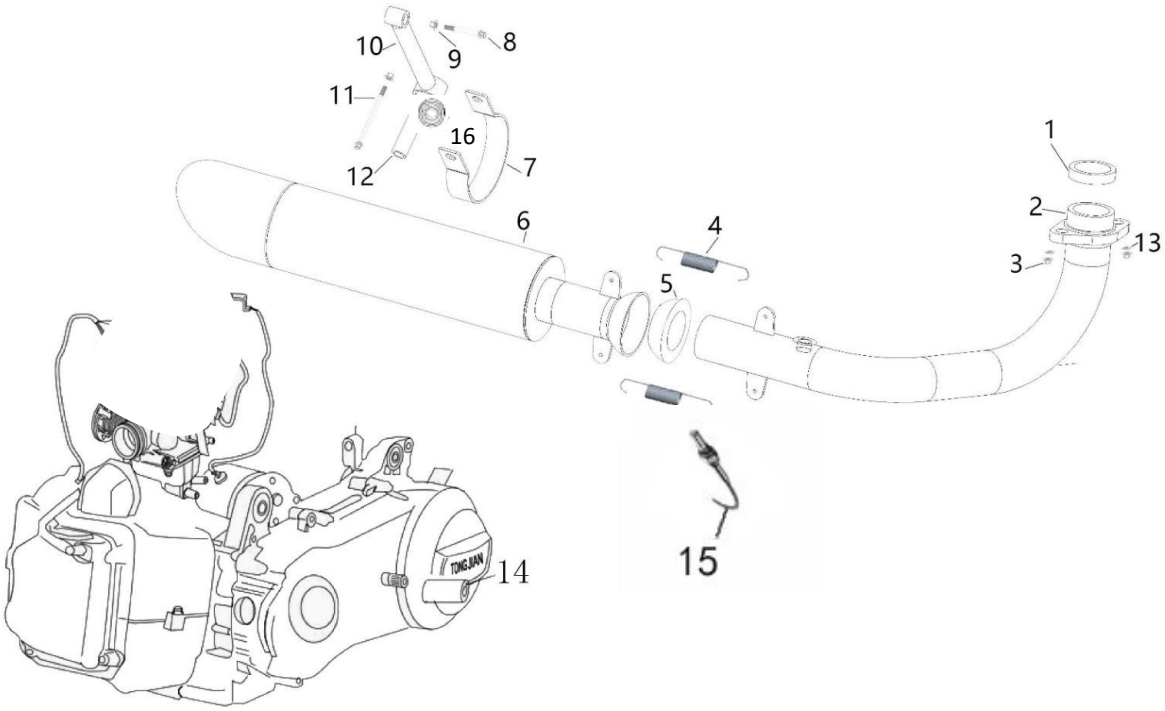

NO.	PARTS NO.	PART NAME	QTY
17-1	70900500025000	CG Exhaust Gasket	1
17-2	47120-K7X	K7X EFI Exhaust Header Pipe (with Sensor Port)	1
17-3	61770800012505	M8 Flange Nut (GB6177)	2
17-4	58235400N000	Muffler Spring	2
17-5	47005-K7	Graphite Exhaust Gasket Ring	1
17-6	47110-K7X	Muffler Assembly	1
17-7	47001-K7X	Exhaust Clamp	1
17-8	57870803512505	M8×35 Flange Bolt (GB5787)	1
17-9	61770800012505	M8 Flange Nut (GB6177)	1
17-10	47410-K7X	Exhaust Mounting Link Rod	1
17-11	57870807012505	M8×70 Flange Bolt (GB5787)	1
17-12	47002-K7XA	Φ9×Φ13-30 Spacer	1
17-13	93000800000005	Φ8 Spring Washer (GB93)	2
17-14	173MN	Engine Assembly	1
17-15	RY12H	Oxygen Sensor (O_2 Sensor)	1
17-16	47209-300U	Φ8×Φ20×16/19 Muffler Cushion Bushing	1
17-17	61870800012505	M8 Lock Nut (GB6187)	2

ENGINE MOUNT PLATE

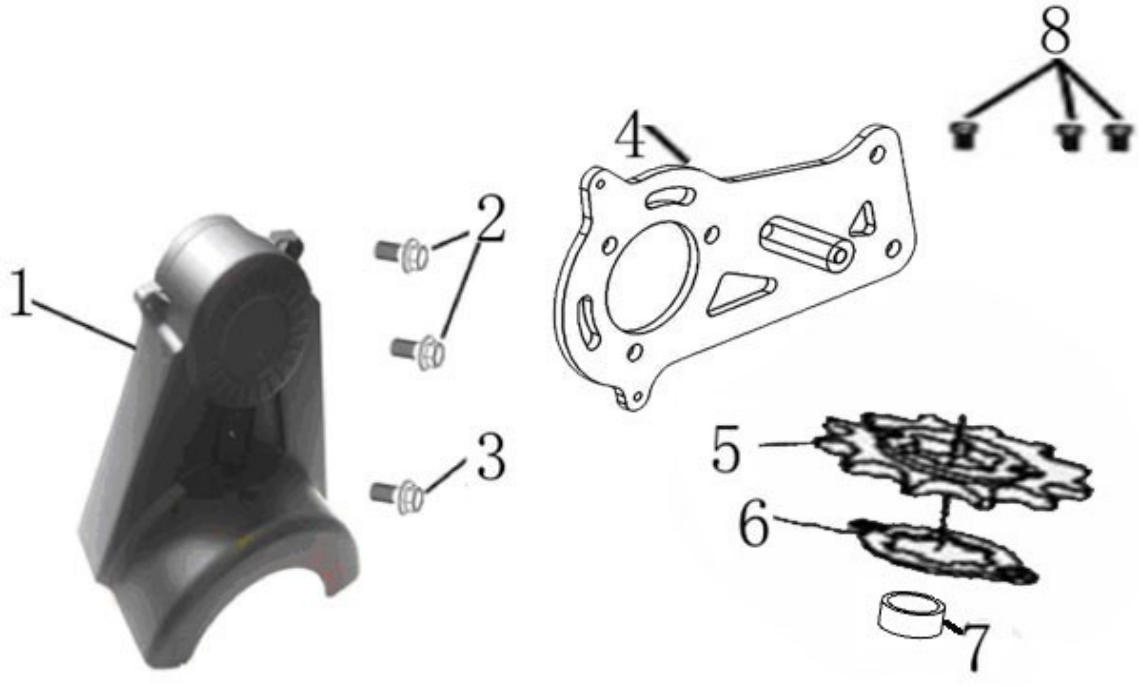

NO.	PARTS NO.	PART NAME	QTY
18-1	7010133150G001	CHAIN DISC GUARD	1
18-2	57890602510005	BOLT M6*25 ,GB5789	2
18-3	57870803512505	BOLT M8*35 ,GB5787	1
18-4	10150-K7X	Chain cover mount	1
18-5	10102-K7X	Output Sprocket（10T-530)	1
18-6	8942500000005	SNAP RING Φ25，GB894	1
18-7	10151-300UB	COLLAR Φ26*Φ32-8.5	1
18-8	57830801612505	BOLT M8*16 ,GB5783	3

EFI/AIR CLEANER ASSY

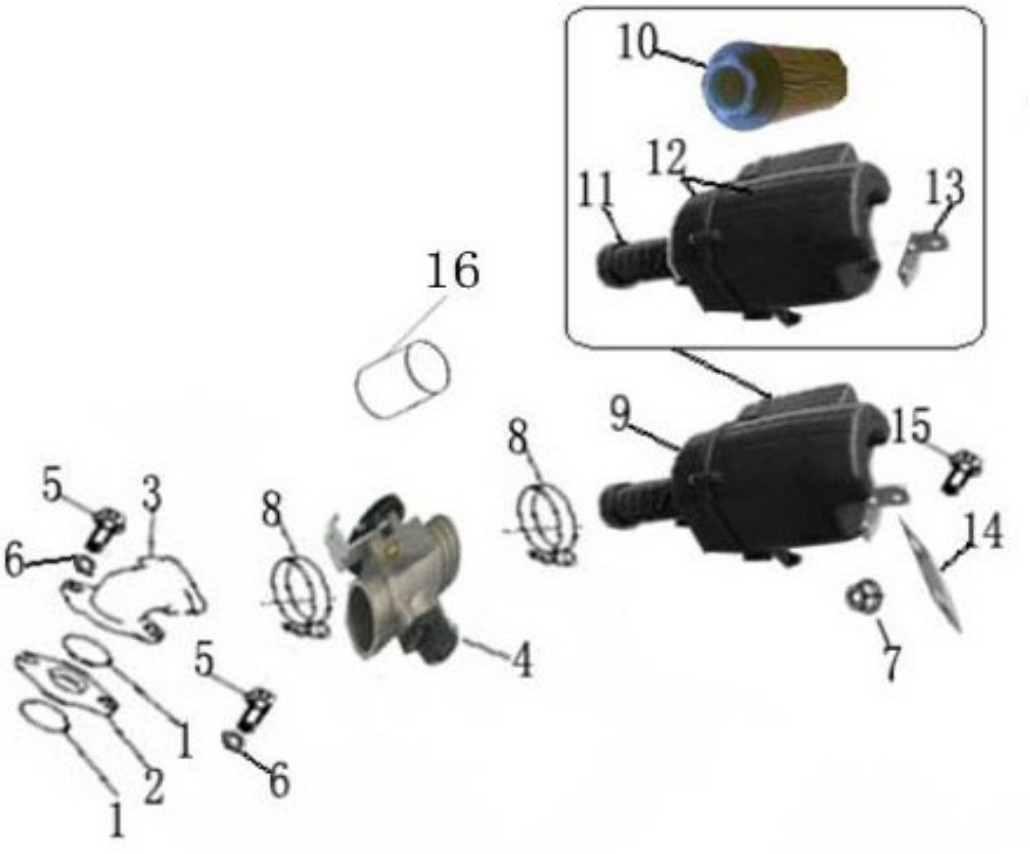

NO.	PARTS NO.	PART NAME	QTY
19-1	169.12.212	O-Ring	2
19-2	169.08.301	Intake Manifold Heat Insulator Gasket	1
19-3	13110-UTV300	EFI Intake Elbow Assembly	1
19-4	RJ34B2	RJ34B2 Throttle Body	1
19-5	57890602510005	M6×25 Flange Bolt (GB5789)	2
19-6	93000600000005	Φ6 Spring Washer (GB93)	2
19-7	61870600010005	M6 Lock Nut (GB6187)	3
19-8	49005-K5	38–51 Band Clamp	3
19-9	49000-300G	Air Filter Assembly	1
19-10	6000151150G000	Air Filter Element	1
19-11	4910100300G000	AIR CLEANER JOINT	2
19-12	7010048150G000	Air Filter Front & Rear Cover Assembly	1
19-13	4900400150G000	Air Filter Front Mounting Plate	1
19-15	57890601610005	M6×16 Flange Bolt (GB5789)	1
19-16	49005-300UE	Stainless Steel Connecting Pipe	1

Rear Axle

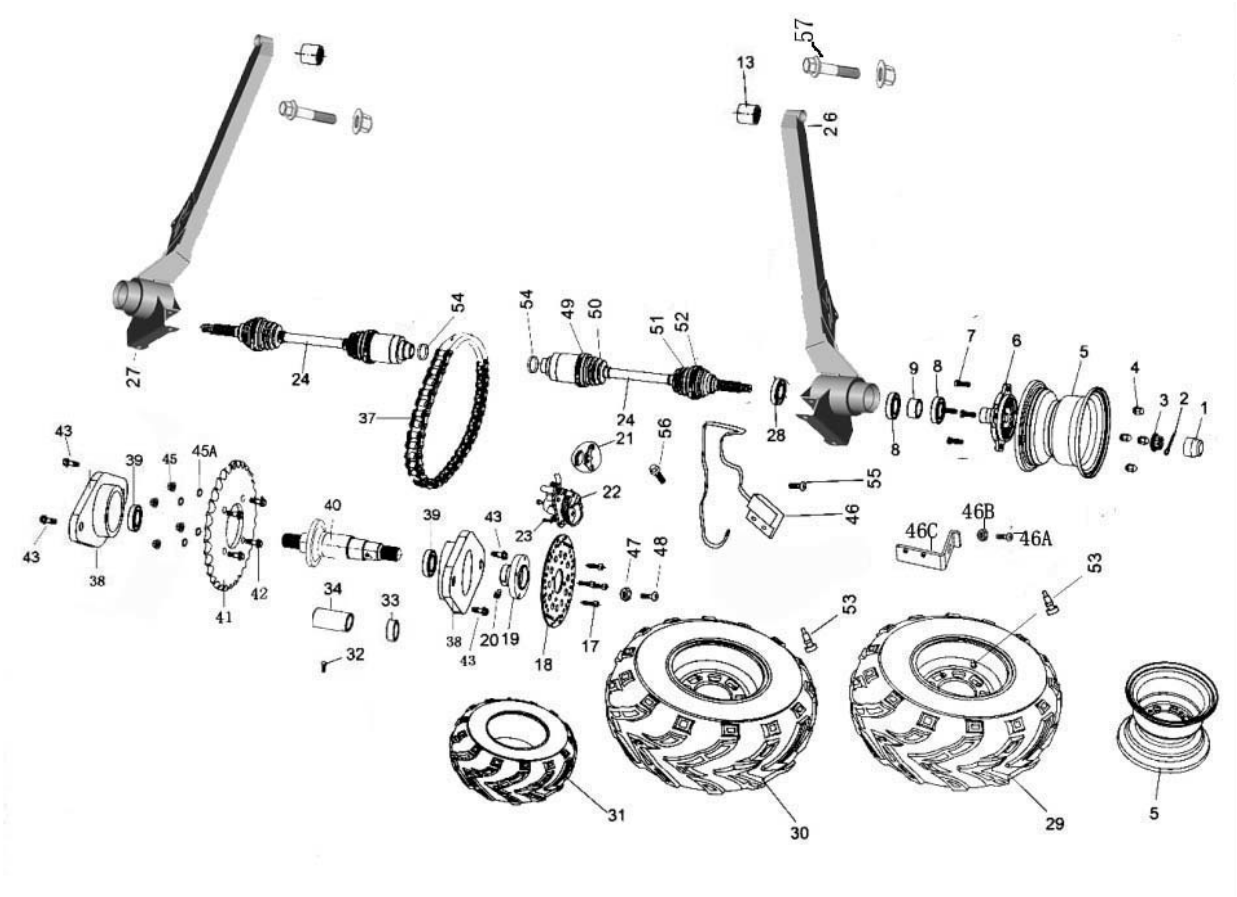

NO.	PARTS NO.	PART NAME	QTY
21-1	44005-300B	HUB COVER	2
21-2	GB914004000005	Cotter pins Φ4*40	2
21-3	94571600015005	Slotted nuts M16*1.5,GB9457	2
21-4	44007-K5	Hub bolts M10*1.25	8
21-5	54110-300B	Rear rims	2
21-6	8.010.169-300B	Rear hubs	2
21-7	44003-K5	Hub bolts M10*1.25*35	8
21-8	6008-2RS	bearing 6008-2RS	4
21-9	8.010.170-300B	Spacer Φ40*Φ47-20.5	2
21-13	58720N	Cushioning rubber cover	2
21-17	57890802012505	bolt M8*20 ,GB5789	4
21-18	8.010.053	Rear brake disc	1
21-19	8.030.036	Hydraulic brake disc holder	2
21-20	9.101.018	Allen socket bolts M10*15	1
21-23	70000801612505	Allen socket bolts M8*16	2
21-24	6.000.244-KX	CV/SHAFT JOINT	2
21-26	54220-300B	REAR SUSPENSION ARM ASSY.R	1
21-27	54210-300B	REAR SUSPENSION ARM ASSY.L	1
21-28	YF684508	DUST SEAL 68*45*8	2
21-29	54100-300B	REAR WHEEL ASSY.R.	1
21-30	54210-300B	REAR WHEEL ASSY.L.	1
21-31	44031-300B	TIRE RR.	2
21-32	57890600810005	BOLT M6*8,GB5789	1
21-33	10125-300G	10125 AXLE COLLAR	1
21-34	10124-300G	10124 AXLE COLLAR	1
21-37	LT530-62	DRIVE CHAIN （62-530H)	1

Rear Axle

21-38	8.130.033	HOUSING COMP RR AXLE BRG	2
21-39	6207-2RS	BEARING 6207-2RS	2
21-40	10123-300G	AXLE	1
21-41	8.110.077-K7X	REAR SPROCKET (46T-530)	1
21-42	GB700803512505	BOLT M8*35，GB70	4
21-42A	DIN985	Nylon self-locking nut M8	4
21-43	57891203012505	BOLT M12*1.25*30，GB5789	4
21-45	61870800012505	NUT M8，GB6187	4
21-45A	97000800000005	gasket Φ8,GB97	4
21-46	7.190.012	speed sensor	1
21-46A	57870601610005	bolt M6*16,GB5787	1
21-46B	61870600010005	NUT M6,GB6187	1
21-46C	58001-150	SPEED TRANSDUCER SET	2
21-47	7.190.013	MAGNETIC CYLINDER	1
21-48	81800300610005	BOLT M3*6 ,GB818	6
21-49	7.190.014	RUBBER BUSH CIRCLIP 1	2
21-50	7.190.015	RUBBER BUSH(CV/SHAFT JOINT)	2
21-51	7.190.016	RUBBER BUSH(CV/SHAFT JOINT)	2
21-52	7.190.017	RUBBER BUSH CIRCLIP 2	2
21-53	7.190.018	Air Valve	2
21-54	7.190.019	CIRCLIP Φ1.6*Φ21.5	2
21-55	81800300610005	BOLT M3*6 ,GB818	3
21-56	81800601610005	BOLT M6*16 ,GB818	2
21-57	57891007512505	FLANGE BOLT M10*1.25*75,GB5789	2

BRAKE ASSY

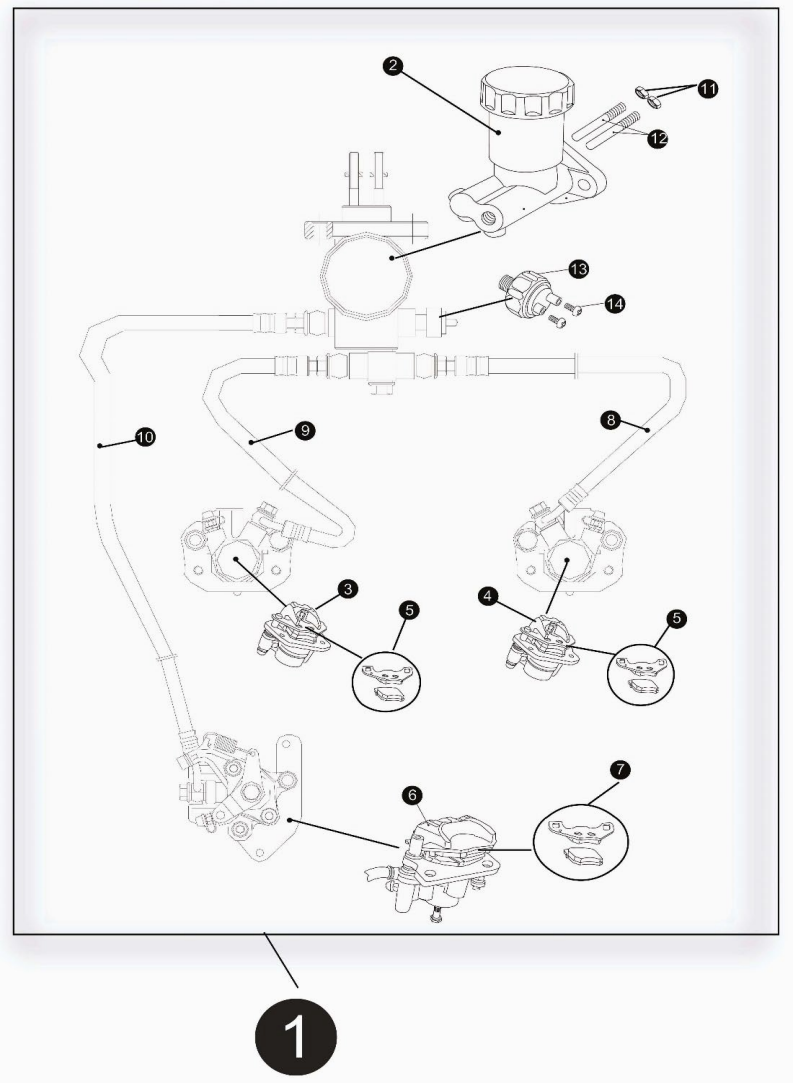

NO.	PARTS NO.	PART NAME	QTY
22-1	45000-KX	BRAKE ASSY.	1
22-2	6.000.076	BRAKE MASTER CYLINDER	1
22-3	6.000.095	FRONT BRAKE CALIPER R.	1
22-4	6.000.028	FRONT BRAKE CALIPER L.	1
22-5	7.020.016	FRONT BRAKE CALIPER PAD SET	2
22-6	6.000.229	BRAKE CALIPER ASSY.RR	1
22-7	7.020.022	REAR BRAKE CALIPER PAD SET	1
22-8	6.000.089	HOSE ASSY.L.BRAKE 34"	1
22-9	6.000.090	HOSE ASSY.R.BRAKE 43"	1
22-10	6.000.091	HOSE ASSY.RR.BRAKE 75"	1
22-11	61700800012505	NUT M8,GB6170	2
22-12	8.010.081	BRAKE SPINDLE PIN	2

SWITCH /electrical equipment

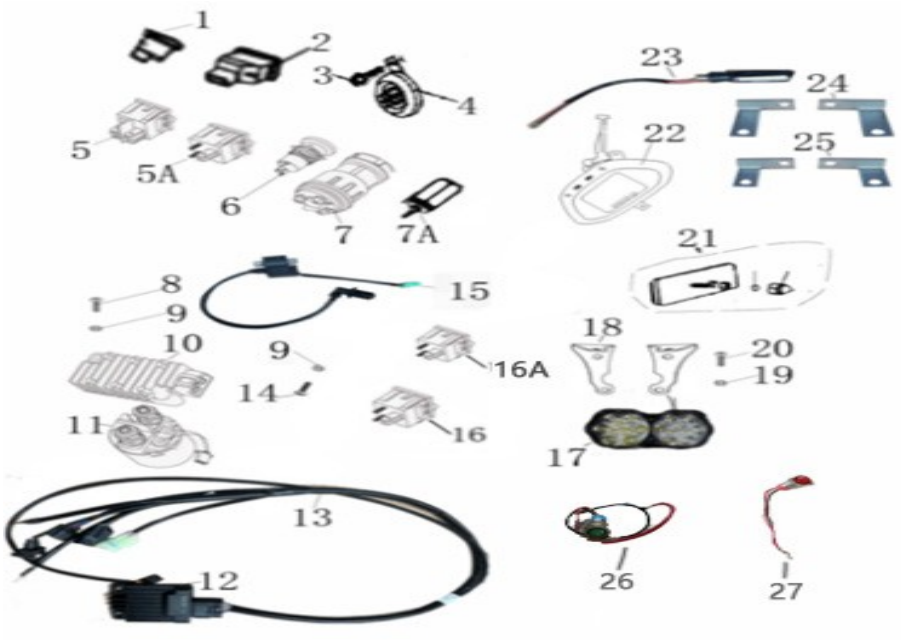

NO.	PARTS NO.	PART NAME	QTY
23-1	80031-K7	Horn Switch	1
23-2	80032-K7	Turn Signal Switch	1
23-3	57890601210005	M6×12 Flange Bolt	1
23-4	80036-K5	12V High-Tone Horn (Go-Kart)	1
23-5	80033-K7	Headlight Switch	1
23-5A	80041-KX	Starter Switch	1
23-6	80034-K7	Engine Stop Switch	1
23-7	80035-K5	Ignition Switch	1
23-7A	80042-KX	12V Power Outlet (Cigarette Lighter Socket)	1
23-8	81800603010005	M6×30 Phillips Screw (GB818)	2
23-9	61770500000005	M5 Flange Nut (GB6177)	2
23-10	6000124300U000	Voltage Regulator / Rectifier	1
23-11	6000035300U000	Relay	1
23-12	REDA1F1-300	Electronic Control Unit (ECU)	1
23-13	RX-YT-K5-175	EFI Wiring Harness	1
23-14	57870502500005	M5×25 Flange Screw	2
23-15	RML-1A450A	Ignition Control Module	1
23-16	80036-K7X	Auxiliary Relay	1
23-16A	80037-KX	Auxiliary Relay	1
23-17	80043-KX	Front Headlight Assembly	2
23-18	80044-KX	Headlight Left/Right Bracket	2
23-19	57890501200005	M5×12 Flange Screw (GB5789)	4
23-20	61770500000005	M5 Lock Nut (GB6177)	4
23-21	80045-KX	Rear Tail Light	1
23-22	80046-KX	Instrument Cluster	1
23-23	80047-KX	Turn Signal Lamp	4
23-24	80048-KX	Front Turn Signal Left/Right Bracket	2
23-25	80049-KX	Rear Turn Signal Left/Right Bracket	2
23-26	80038-K7XE	Malfunction Indicator Lamp (MIL)	1
23-27	80039-300U	Coolant Temperature Warning Indicator	1

SWITCH /electrical equipment

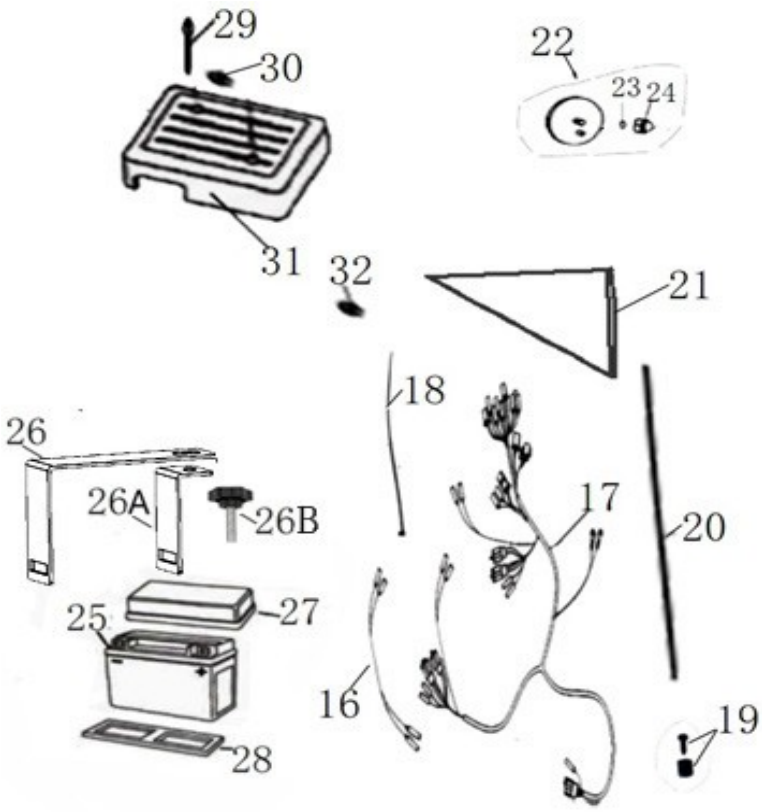

NO.	PARTS NO.	PART NAME	QTY
23-16	80026-K5	BATTERY CABLE	1
23-17	80025-KX	WIRE HARNESS	1
23-18	12111208035	ribbon	21
23-19	0001000250G000	Flagpole holder	1
23-20	0000100250G000	flagpole	1
23-21	0000200250G000	Flag	1
23-25	6000382-KX	BATTERY 12V 14AH	1
23-26	58127-300B	BATTERY STRAP	1
23-26A	58128-300B	Battery bead hook	1
23-26B	57890803512505	bolt M8*35,GB5789	1
23-27	7010028250G000	BATTERY COVER	2
23-28	7020020250G000	LOWER BATTERY CUSHION	1
23-29	57870608010005	GB5787 BLOT M6*80	2
23-30	96000600000005	GB96 WASHER Φ6	2
23-31	7010029250G000	Electric box cover	1

Plastic parts

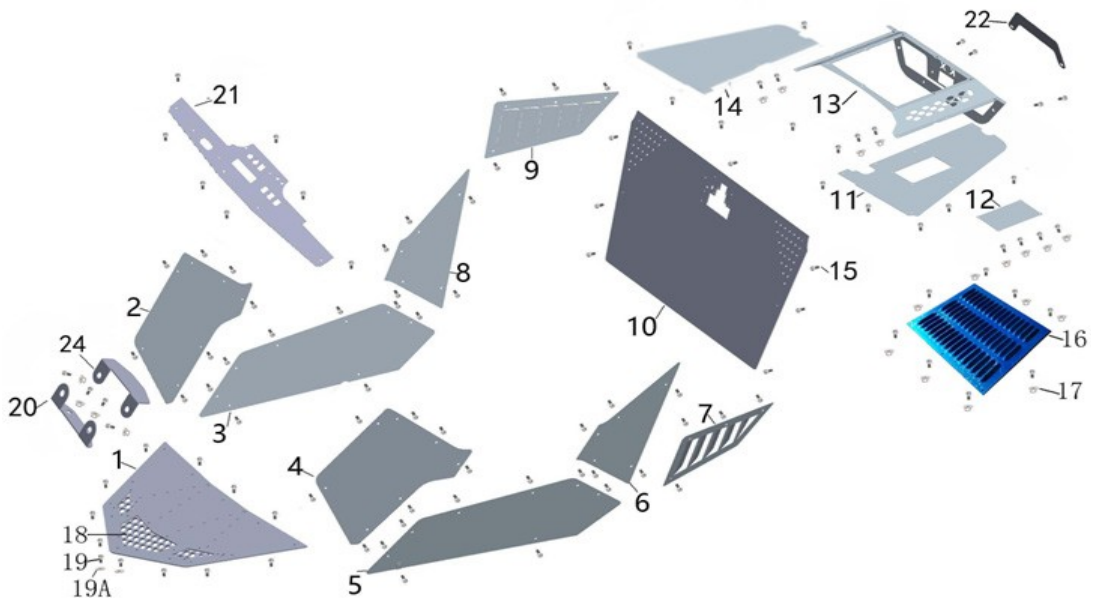

\

NO.	PARTS NO.	PART NAME	QTY
24-1	65002-300B	Front cover	1
24-2	65015-300B	Right front side panel	1
24-3	65013-300B	Right cover	1
24-4	65005-300B	Left front side panel	1
24-5	65003-300B	Left cover	1
24-6	65004-300B	Rear Left cover	1
24-7	65007-300B	Left rear trim panel	1
24-8	65014-300B	Rear right cover	1
24-9	65017-300B	Right rear trim panel	1
24-10	65006-300B	Seat back panels	1
24-11	58012-300B	Left rear cover	1
24-12	65008-300B	rear cover	1
24-13	58011-300B	rear cover	1
24-14	58013-KXA	Right rear cover	1
24-15	57890601210005	FLANGE BOLT M6*12,GB5789	104
24-16	65023-300B	Rear ventilation panels	1
24-17	61770600010005	bolt M6,GB6177	36
24-18	65024-300B	Front trim mesh	1
24-19	57890502000005	FLANGE BOLT M5*20	12
24-19A	97000500000005	GB97 WASHER Φ5	12
24-20	40275-K7A	Instrument fixed plate 1	1
24-21	65001-300B	Instrument mounting plate	1
24-22	58015-KX	LOGO mounting plate	1
24-24	40276-K7A	Instrument fixed plate 2	1

decals \ Manual

NO.	PARTS NO.	PART NAME	QTY
25-1	90720-300B	Warning decals	1
25-2	90771-300B	Owner’s Manual	1
25-3	90730-300B	Type of decal	2
25-4	90901-300B	EPA Hang tag	1
25-5	90902-300B	EPA anti-counterfeiting labeling	1
25-6	90820-300B	Red and white reflective sticker	1
25-7	90830-300B	yellow reflective sticker	1
25-8	90840-300B	Red reflective sticker	1

Cooling system

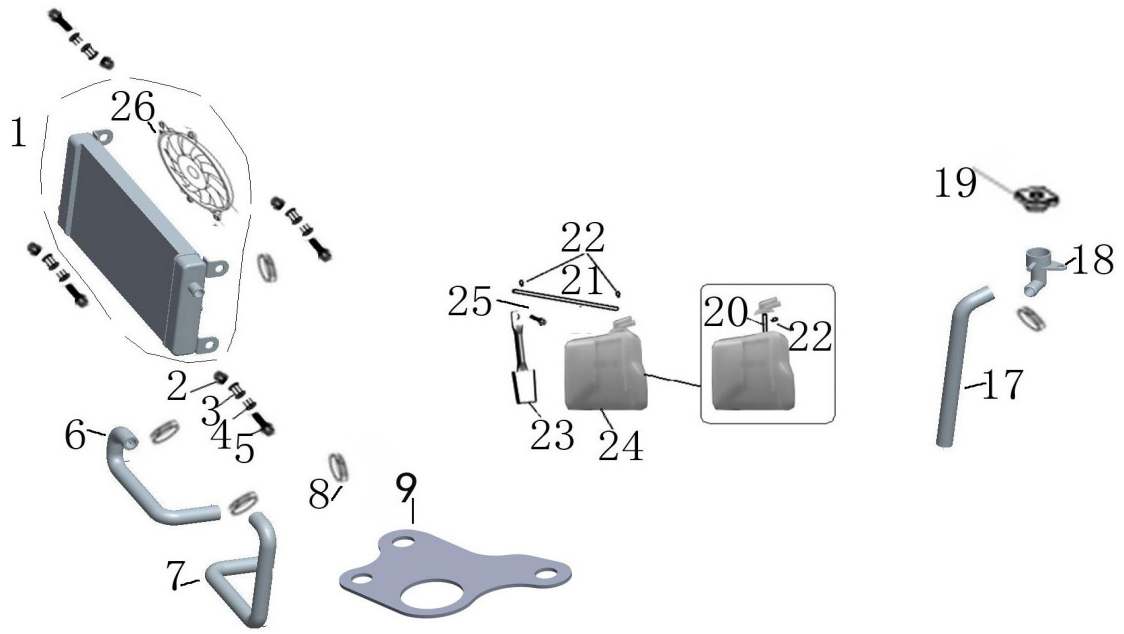

NO.	PARTS NO.	PART NAME	QTY
27-1	14210-300B	Cooling water tank	1
27-2	61870600010005	NUT M6 ,GB6187	4
27-3	7020005250G000	250 Fuel tank rubber mount	4
27-4	5800400300K000	Fuel tank collar	4
27-5	57890603010005	BOLT M6*30 ,GB5789	4
27-6	14002-KX	Engine inlet Hose	1
27-7	14001-KX	Radiator outlet Hose	1
27-8	7.090.044	TUBE CLAMP φ16-25	12
27-9	58016-KX	Mounting plate	1
27-17	14003-KX	TUBE COMP.WATER	1
27-18	14008-300B	WATER FILLER	1
27-19	14212-300U	RADITOR COMP.COVER	1
27-20	14221-300U	water hose Φ6*Φ10*320	1
27-21	14222-300U	water hose Φ6*Φ10*160	1
27-22	621A0900000000	TUBE CIRCLIP φ9	3
27-24	14220-300U	Cooling pot	1
27-25	57890603010005	BOLT M6X30 ,GB5789	1
27-26	14410-300B	FAN COMP.	1

Rim Deco

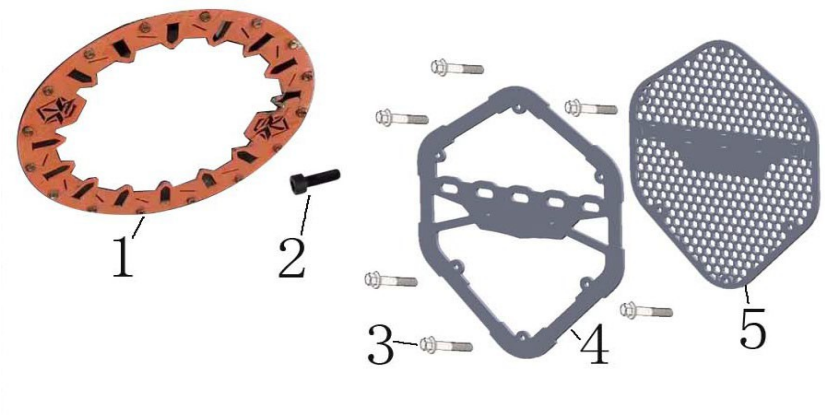

NO.	PARTS NO.	PART NAME	QTY
28-1	44005-300B	Decorative rim trim	4
28-2	57890600810005	bolt M6*8	64
28-3	57890601610005	FLANGE BOLT M6*16,GB5789	6
28-4	65009-300B	FR. decorative panels	1
28-5	65019-300B	FR. decorative mesh	1