CHEETAH 150(X)
PARTS MANUAL

Fig 17 FRAME GROUP

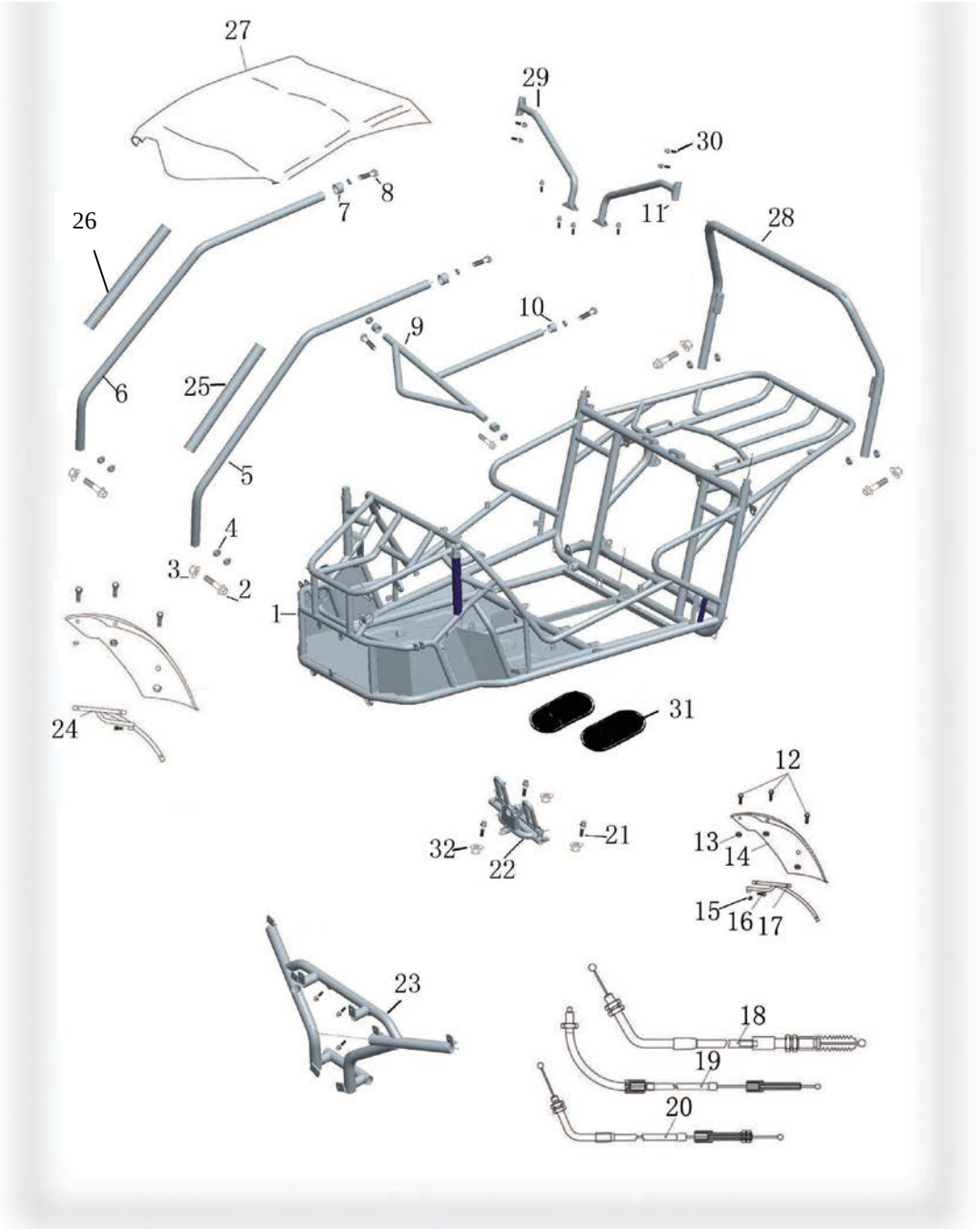

NO.	CODE	Description	QTY.
1	57100-K5	FRAME COMP.(R.S.B)	1
2	57870805512505	BOLT M8X55 ,GB5787	9
3	61870800012505	LOCKING NUT M8，GB6187	4

4	8010047250G000	R- WASHER	13
5	58430-K5	C.B.C.CUSTOM J-BAR.LSIDE(R.S.B)	1
6	58440-K5	C.B.C.CUSTOM J-BAR.RSIDE(R.S.B)	1
7	7010016250G000	TUBE SEAT φ32	2
9	58410-K5	C.B.C.CUSTOM CROSS BARTOP.FR(R.S.B)	1
10	7010017250G000	TUBE SEAT φ25	3
11	58480-K5	Rear Decorative pole（L)	1
12	57890601610005	BOLT M6X16 ,GB5787	13
13	61870800012505	NUT M8 ,GB6187	6
14	7010034250G000	FRONT FENDER	2
15	93000600000005	GB93 SPRING WASHER φ6	4
17	6100067250G000	FRONT FENDER BRACKET,L	1
18	6000232150G000	THROTTLE CABLE COMP.	1
19	6013000300G000	REVERSE CABLE COMP.	2
20	6000050150G000	PARKING BRAKE CABLE COMP	1
21	5789102512505	BOLT M10x1.25X25 ,GB5789	3
22	58510-K5	Brake and accelerator bracket	1
23	58610-K5	PROTECTING BAR	1
24	6100102250G000	FRONT FENDER BRACKET,R	1
25	58005-K5	FOAM PADDING-1	2
26	58005-K5-TOP	TOP CAGE FORM PADDING	3
27	00010-K5	BIKINI TOP	1
28	58420-K5	REAR RACK CAGE	1
29	58490-K5	Rear Decorative pole（R)	1
30	57890801610005	BOLT M8X16 ,GB5789	8
31	7020012250G000	RUBBER FOOLPLAIE	4
32	61871000012505	LOCKING NUT M10x1.25，GB6187	3

Fig 18: STEERING SHAFT ASSY

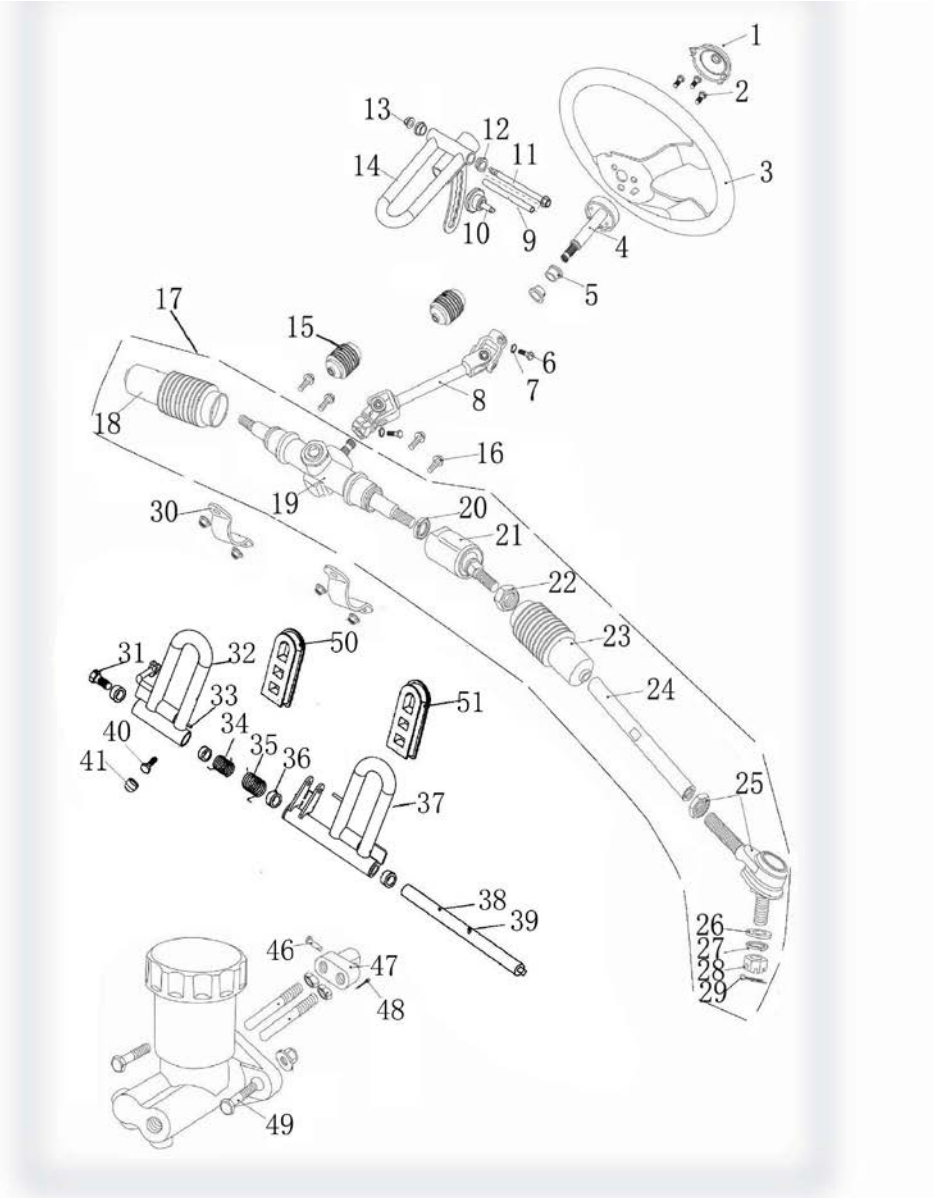

NO.	CODE	DESCRIPTION	QTY.
1	7010041250G000	STEERING BOLT COVER	1
2	57870601610005	GB5783 BOLT M6 x16	3
3	7020038250G000	STEERING WHEEL	1
4	4011000150G000	STEERING SHAFT	1
5	7010026150G000	BUSH STEERING SHAFT	2
6	57830802512505	GB5783 BOLT M8 x23	2
7	93000800000005	LOCK WASHER φ8 ,GB93	2
8	6000093250G000	STEERING LINKAGE KNUCKLE	1
9	8010015250G000	UPPER SUSPENSION ARM COLLAR,80	1
10	4000100150G000	STEERING GEAR ADJUSTING BOLT	1
11	57890810512505	GB5789 BOLT M8 x105	1
12	7010003250G000	UPPER SUSPENSION ARM BUSH,80	2

13	61870800012505	LOCKING NUT M8，GB6187	9
14	4000051150G000	TILT STEERING HOUSING	1
15	7020066250G000	DUST COVER BALL JOINT	2
16	61870802512505	GB5789 BOLT M8 x25	4
17	3000007250G000	STEERING GEAR ASSY	1
18	7020002250G000	STEERING BALL JOINT DUST COVER	2
19	4000014250G000	STEERING GEAR	1
20	9900016250G000	GB99 nut m16*1.5	2
21	4000008250G000	STEERING BALL JOINT	2
22	61701000012505	GB6170 nut m10*1.25	2
24	8010157250G000	TIE ROD	2
25	6000062250G000	ROD END	2
26	97001000000002	GB97 WASHER φ10	2
27	93001000000002	LOCK WASHER φ8 ,GB93	2
28	94571000012505	GB9457 FLANGE UNT.M10*1.25	2
29	GB912502500002	COTTER PIN φ2.5×25，GB91	2
30	8020014250G000	STEERING GEAR BRACKET(R.S.B)	2
31	70000801612505	GB70 BLOT M8X16	1
32	9500218080G000	THROTTLE PEDAL COMP	1
33	87910300160000	ROLL PIN φ3 x 16	2
34	8040010080G000	THROTTLE PEDAL RETURN SPRING,L	1
35	8040011080G000	BRAKE PEDAL RETURN SPRING,R	1
36	7010003250G000	PEDAL BUSH	4
37	4000044080G000	BRALE PEDAL COMP.	1
38	8010123080G000	PEDAL BOLT	1
39	87910300200000	ROLL PIN φ3 x 20	1
40	57820806512505	BOLT M8X65	1
41	7010022080G000	rubber food pedal stop	1
46	88200602800003	LOCKING ROLL PIN	1
47	8030024250G001	CYIINDER ROD BRACKET	1
48	GB912001600002	COTTER PIN Φ2x16	1
49	57890803512505	BOLT M8X35 ,GB5787	2
50	7020044080G000	THROTTLE PEDAL PAD	1
51	7020043080G000	BRAKE PEDAL PAD	1

Fig 19: SUSPENSION ARM ASSY

NO.	CODE	DESCRIPTION	QTY.
1	44210-K5	SPINDLE AND STRUT SUPPORT,R	1
2	GB5789 M10X145	GB5787 FLANGE BOLT M10 x 145x1.25	2
3	8010015-K5	UPPER SUSPENSION ARM COLLAR	2
4	7010003250G000	UPPER SUSPENSION ARM BUSH	4
5	58210-K5	UPPER SUSPENSION ARM	2

6	61870800012505	GB6187 LOCKING FLANGE UNT.M8	2
7	61871200012505	GB6187 LOCKING FLANGE UNT.M12*1.25	2
7A	97001200000005	WASHER Φ12	2
8	7020025250G000	BALL HEAD DUST SEAL	4
9	8020053250G000	BALL HEAD SPACER	4
10	44220-K5	SPINDLE AND STRUT SUPPORT,L	1
12	57891004012505	GB5787 FLANGE BOLT M10 x 40x1.25	2
13	61871000012505	GB6187 LOCKING FLANGE UNT.M10*1.25	16
14	43100-K5	CUSHION ASSY.,FR（L=300)	2
15	5400600400N000	Grease nipple	6
16	GB5789 M10X45	GB5789 FLANGE BOLT M10 x 45x1.25	4
18	8010014-K5	LOWER SUSPENSION ARM COLLAR	4
19	7010002250G000	LOWER SUSPENSION ARM BUSH	8
21	58220-K5	FRONT LOWER SUSPENSION ARM	2
22	57891004012505	GB5789 FLANGE BOLT M10 x 40x1.25	2
23	93001200000002	LOCK WASHER Φ12 ,GB93	2
23A	94571200012505	GB9457 FLANGE UNT.M12*1.25	2
24	GB912502500002	COTTER PIN Φ2.5x25	2
25	70000801612505	GB70 BLOT M8X16	4
26	57830601610005	GB5783 BLOT M6X16	12
27	8010054250G000	BRAKE DISC,RR	2
28	YF047002500700	DUST SEAL 42*25*7	2
29	62042RS0000000	BEARING 6204-2RS	2
30	9710031250G000	TIRE BOLT M10×1.25×31	8
31	8010085250GH00	FRONT WHEEL HUB	2
32	62022RS0000000	BEARING 6202-2RS	2
33	7020050250G000	TIRE RR.22X7-8	2
34	6000142250G000	RIM, FRONT WHEEL	2
35	7190018080G000	TIRE NIPPLE	2
36	6000097250G000	FR.WHEEL ASSY.R. 22*7-8	1
37	6000003250G000	FR.WHEEL ASSY.L. 22*7-8	1
38	61871000012505	GB6187 LOCKING FLANGE UNT.M10*1.25	16
39	94571400015005	CASTLE NUT M14X1.5, GB9457	2
39A	9.500.330	COTTER PIN 3X30	2
40	7020039250G000	HUB COVER	2
	4420000150U002	FR.WHEEL ASSY.R. 22*7-10 Aluminum wheel	1
	4411000150U002	RIM, FRONT WHEEL Aluminum	2
	9710039250G100	TIRE BOLT M10×1.25×39	8
	7020039250G002	HUB COVER Aluminum wheel	2

Fig 20: TANK/SEAT/SEATBELT

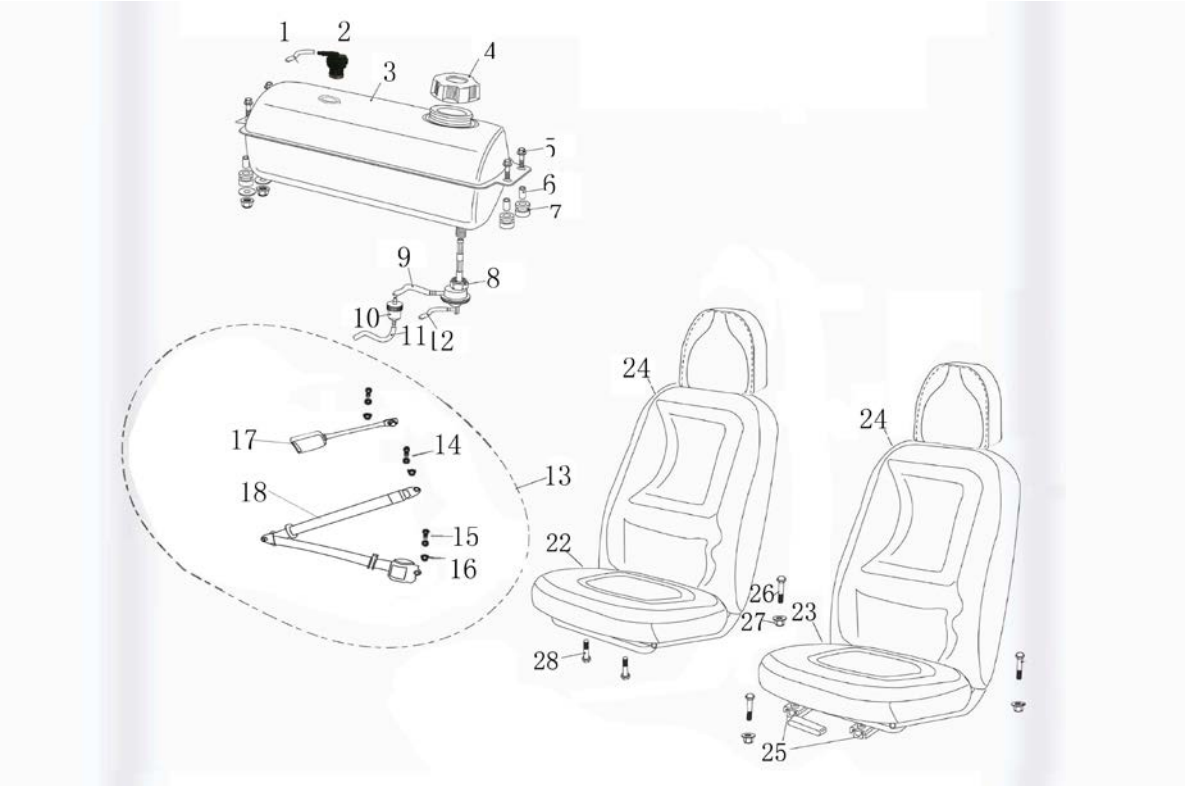

NO.	CODE	DESCRIPTION	QTY.
1	51001-K5	One way vent valve pipe	1
2	51010-K5	One way vent valve	1
3	4000029250G000	fuel tank	1
4	6000145080G000	fuel tank cap	1
5	57870802512505	FLANGE BOLT M8×25	4
6	8010034250G000	TANK COMP COLLAR	4
7	7020005250G000	RUBBER MOUNT	4
8	6000046150G000	Fuel tank valve	1
9	7020021150G000	oil pipe 1	1
10	6000056250G000	petrol filter	1
11	7020022150G000	oil pipe 2	1
13	51200-K5	SAFETY BELT	2
14	9.700.001	SAFETY BELT SPECIAL BOLT	2
15	57891002012505	FLANGE BOLT M10*1.25*20，GB5789	5
16	61871000012505	GB6187 NUT.M10*1.25	2
17	51220-K5	SAFTY BELT,HOOK	2
18	51210-K5	SAFTY BELT	2
22	51100-K5	SEAT COMP.R	1
23	51200-K5	SEAT RALL SET	1
24	51300-K5	SEAT back	2
25	51220-K5	DRIVER SEAT SLIDER	1
26	57870801612503	FLANGE BOLT M8×20	4
27	61770800012505	FLANGE NUT M8 GB6177	2
28	57870804012505	FLANGE BOLT M8×35	2

Fig 21: REAR SWING ARM ASSY.UPPER

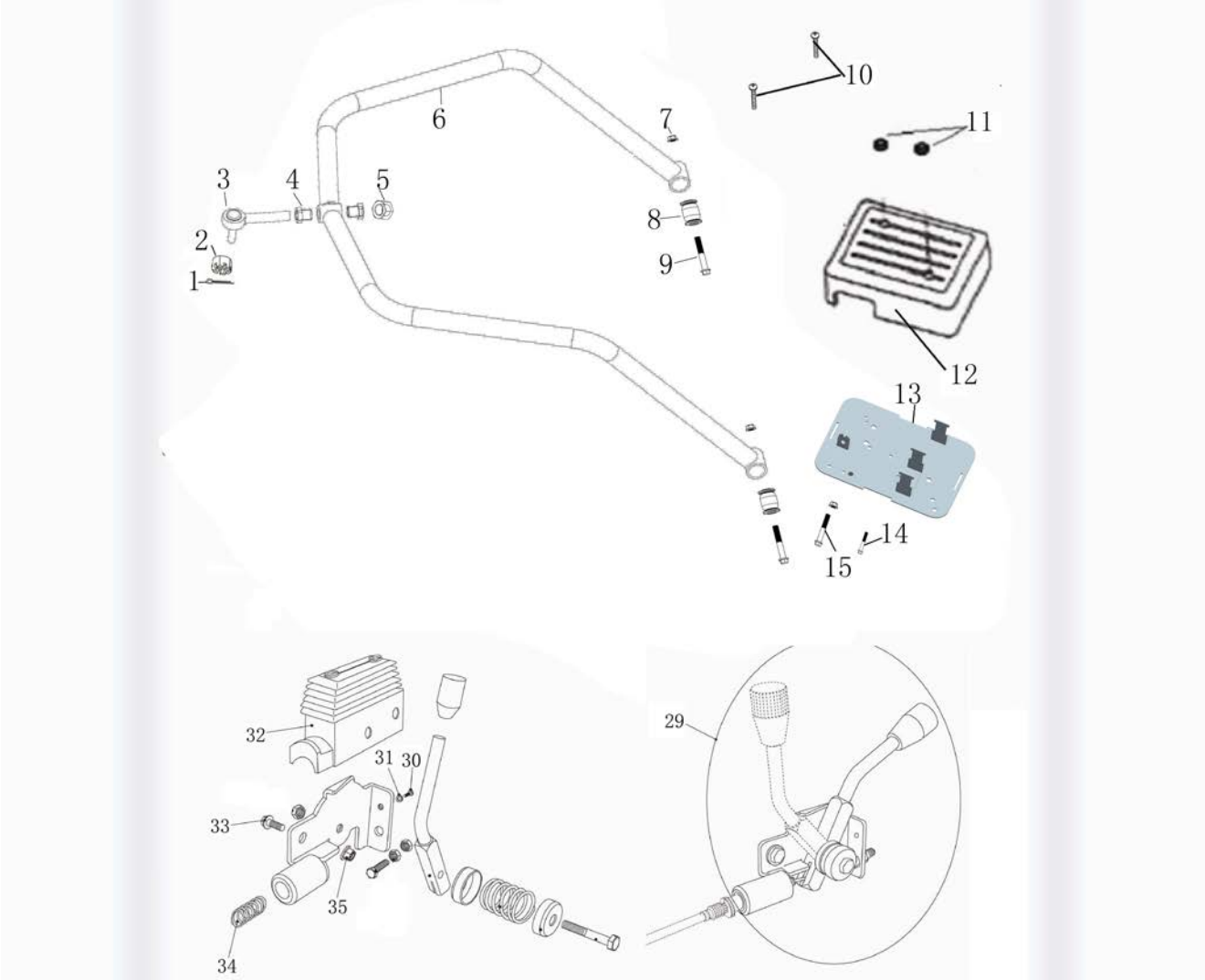

NO.	CODE	DESCRIPTION	QTY.
1	GB912503000002	COTTER PIN Φ2.5×25，GB91	1
2	94571200012505	CASTLE NUT M12X1.25， GB9457	1
2A	93001200000002	LOCK WASHER Φ12 ,GB93	1
3	58310-K5	LINKAGE KNUCKLE	1
4	58301-K5	Threaded sleeve	2
5	61701600015005	NUT M16X1.5， GB6170	1
6	58320-K5	Rear swing arm upper	1
7	GB5789	FLANGE BOLT M10×1.25×68	2
8	58720N	CUSHION BUSH	2
9	GB6187	LOCKING FLANGE NUT M10×1.25	2
10	57870608010004	GB818 BOLT M6X80	2
11	GB90	GB96 WASHER Φ6	2
12	7010029250G000	Electric box cover	1
13	58490-K5	Electrical installation board assembly	1
15	57870804512505	FLANGE BOLT M8X45	1
29	6000042150G000	PARKING BRAKE LEVER ASSY	1
30	57830501210005	BOLT M5X12 ,GB5783	1

31	96000500000005	GB96 WASHER ϕ5	1
32	7020024150G000	Hand brake protection cover	1
33	57870801612505	FLANGE BOLT M8X16	2
34	8040004150G000	PARKING BRAKE CABLE SPRING	1
35	61870800012505	LOCKING FLANGE NUT M8	2

Fig 22: REAR SWING ARM

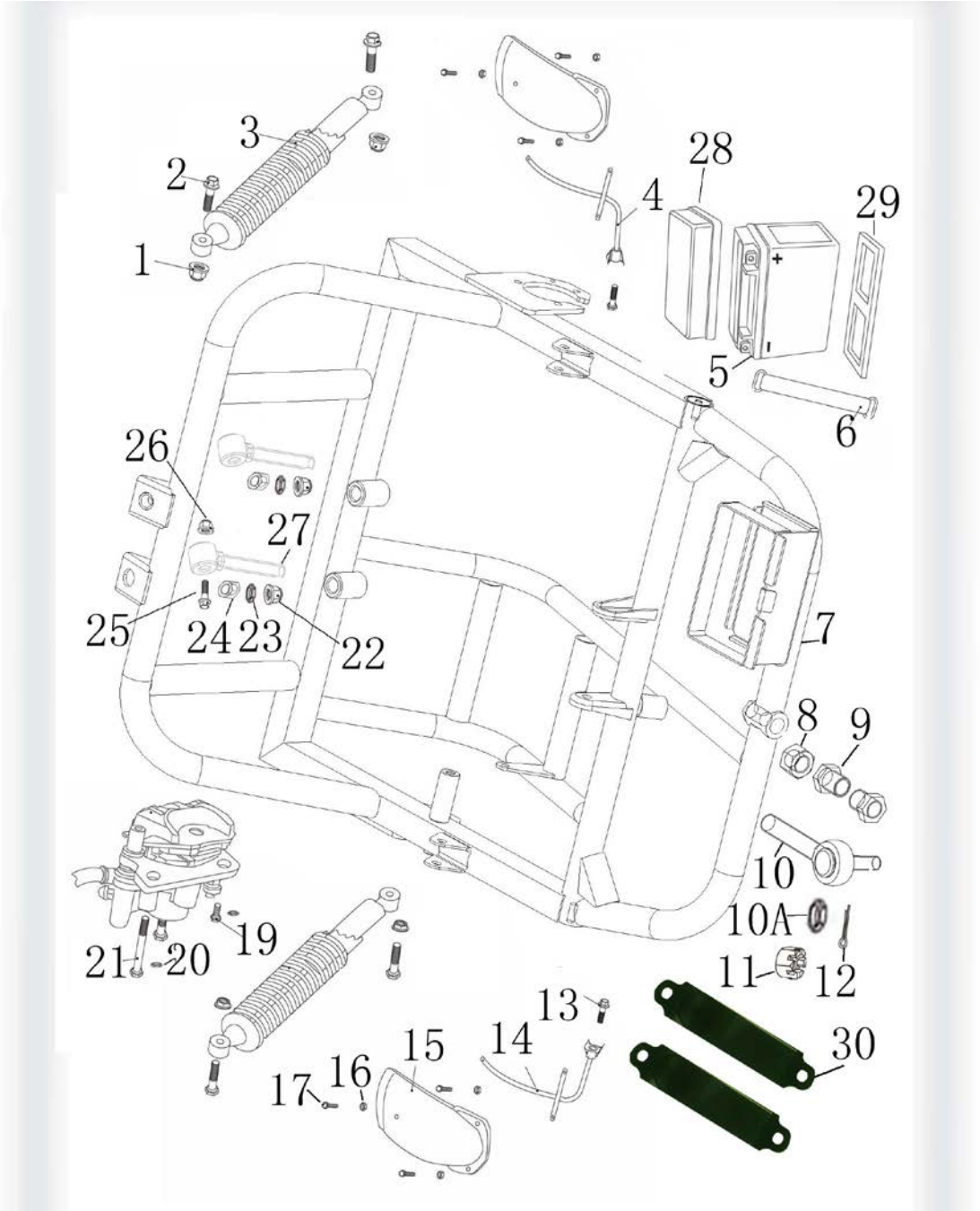

NO.	CODE	DESCRIPTION	QTY.
1	61871000012505	LOCKING FLANGE NUT M10×1.25	4
2	57891004012505	FLANGE BOLT M10×1.25×40	6
3	6000006150G000	CUSHION ASSY. RR	2
4	58240-K5	REAR FENDER BRACKET.R	1
5	6000382250G000	BATTERY 12V 12AH	1
6	7020023250G000	BATTERY STRAP	1
7	58100-K5	REAR SWING ARM	1
8	61701600015005	NUT M16X1.5， GB6170	1
9	58301-K5	Threaded sleeve	2
10	58310-K5	LINKAGE KNUCKLE	1

10A	93001200000002	GB93 SPRING WASHER Φ12	1
11	94571200012505	CASTLE NUT M12X1.5， GB9457	1
12	GB912503000002	COTTER PIN Φ2.5×30，GB91	1
13	57890801610005	FLANGE BOLT M8×16	4
14	58230-K5	REAR FENDER BRACKET.L	1
15	7010064150G000	FENDER	2
16	61870800012505	NUT M8 ,GB6187	6
17	57890601610005	FLANGE BOLT M6×16	6
19	57870801212505	FLANGE BOLT M8×12	1
20	93000800000005	LOCK WASHER Φ8 ,GB93	2
21	57890810012505	FLANGE BOLT M8×100	1
22	61871200012505	NUT M12X1.25	2
23	96001200000005	WASHER Φ12	2
24	61701200012505	NUT M12X1.25	2
25	57891014512505	FLANGE BOLT M10×1.25×145	1
26	61871000012505	FLANGE LOCKING NUT M10X1.25	1
27	8147008080G000	CHAIN ADJUSTER	2
28	7010028250G000	BATTERY COVER	2
29	7020020250G000	LOWER BATTERY CUSHION	1
30	58050-K5	Rear Swing Arm Strap	2

Fig 23: ENGING/MUFFLER/EIR/CLEANE

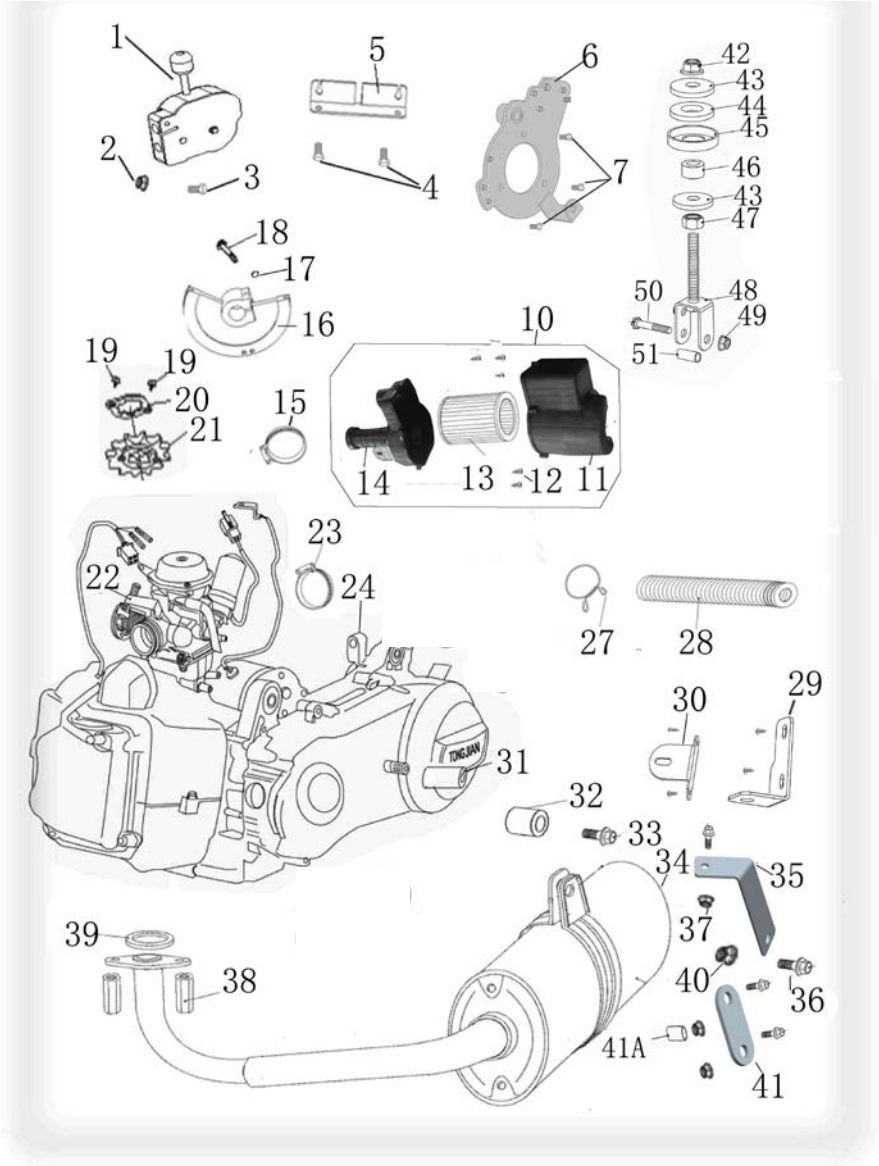

NO.	CODE	DESCRIPTION	QTY.
1	4070000300G000	SHIFTER HOISE ASSY.	1
2	61870800012505	LOCKING FLANGE NUT M8	1
3	57870802012505	FLANGE BOLT M8×20	1
4	57890601210005	FLANGE BOLT M6×12	2
5	4000100300G200	REVERSE CABLE FIXED PLATE	1
6	10100-K5	ENGINE MOUNT PLATE	1
7	57830802012505	FLANGE BOLT M8×16	3
10	4000018150G000	AIR CLEANER ASSY	1
11	7010047150G000	AIR CLEANER CASE	1
12	84505001600002	BOLT ST5X20	9
13	6000151150G000	FILTER ELEMENT	1
14	4910100150G0A0	AIR CLEANER JOINT	1
15	8020056150G000	HOSE CLAMP, 38-51	1
16	4000200300G200	SHIFTER DISK	1

17	93000600000005	LOCK WASHER Φ6 ,GB93	1
18	57830602510005	BOLT M6×25	1
19	57870601210005	Bolt M6×12, GB/T16674	2
20	157-3.11.126	Sprocket Locating Plate	1
21	10102-150U	Output Sprocket（13T-530)	1
22	PD24J00150G000	CARBURETTOR ASSY	1
23	8.020.056	HOSE CLAMP	1
24	1100000150G0A0	ENGINE ASSY	1
27	7020054150G000	HOSE CLAMP	1
28	7010057150G000	corrugated pipe	1
29	4900300150G000	Rear mounting plate of air filter	1
30	4900200150G000	Front mounting plate of air filter	1
31	8030037150G000	Muffler mounting screw sleeve	1
32	5813000150G000	Ceiling lamp bushing	1
33	57870804512505	FLANGE BOLT M8×45	1
34	7.010.029	MUFFLER COMP.EX.STAINLESS STEEL	1
35	58201-K5	Front fixing plate of air filter	1
36	57891004510005	FLANGE BOLT M10×1.25×45	2
37	6187060012505	LOCKING FLANGE NUT M6	1
38	9040027150G000	MUFFLER COMP NUT M6	2
39	9040005150G000	EX.PIPE GASKET	1
40	61870100012505	LOCKING FLANGE NUT M10×1.25	1
41	10114-K5	mounting plate of air filter	1
41A	49001-K5	mounting sleeve of air filter	1
42	61871200012505	LOCKING NUT M12X1.25，GB6187	1
43	8010042250G100	ENGINE MOUNT LINK WASHER	1
44	7020001080G000	ENGINE MOUNT LINK CUSHION	1
45	8020045080G100	ENGINE MOUNT LINK SPACER	1
46	8010041080G000	ENGINE MOUNT LINK COLLAR	1
47	61701200012505	NUT M12X1.25 ,GB6170	1
48	6000026150GH00	ENGINE MOUNT BOLT PLATE	1
49	61871000012505	LOCKING NUT M10*1.25，GB6187	1
50	57851004512505	BOLT M10X1.25X45 ,GB5785	1
51	8010076150G100	ENGINE MOUNT BOLT PLATE COLLAR	1

Fig 24 REAR HOUSING

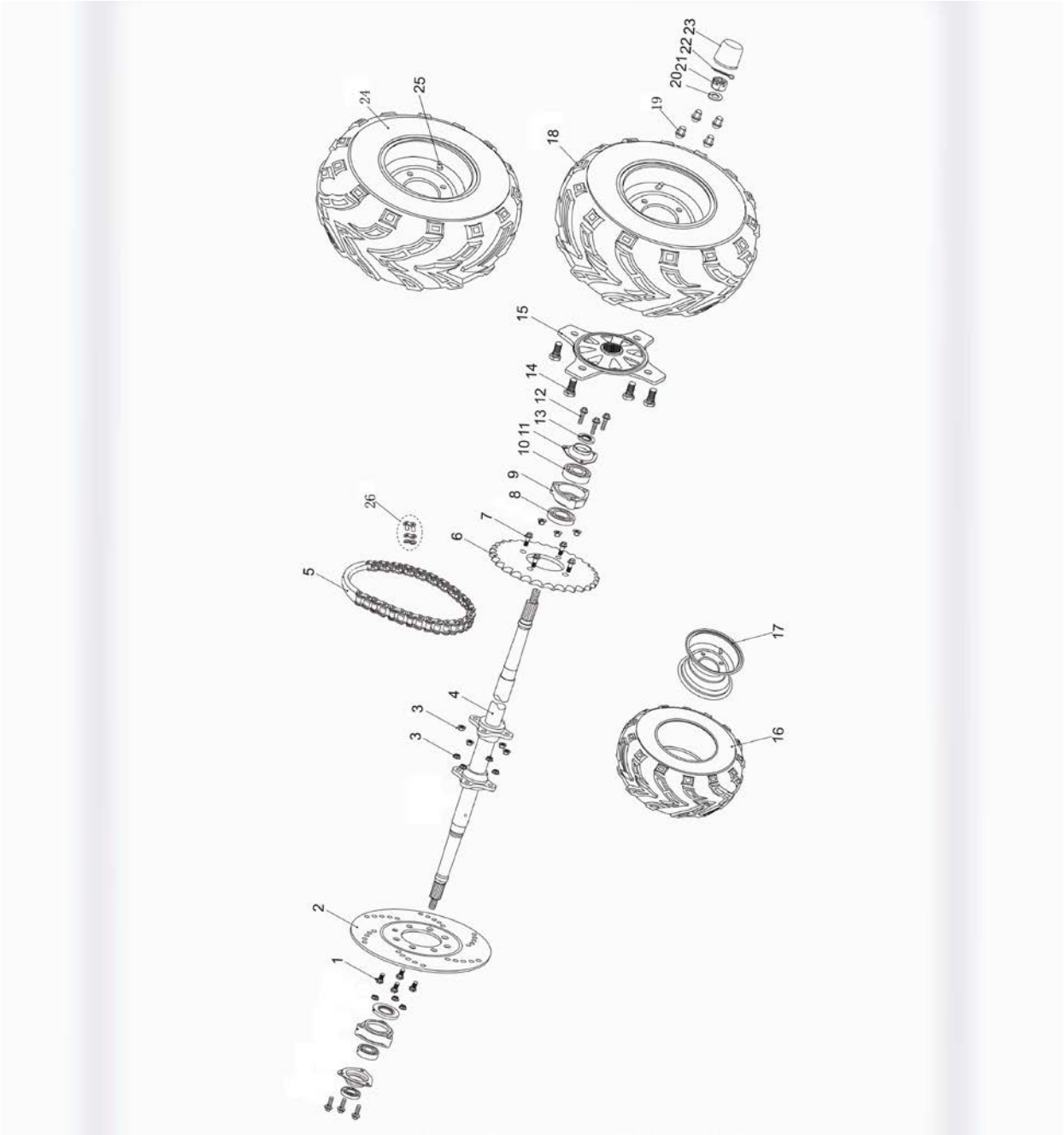

NO.	CODE	DESCRIPTION	QTY.
1	57890802512505	FLANGE BOLT M8×25	4
2	8010053250G000	RR. BRAKE DISC	1
3	61870800012505	LOCKING FLANGE NUT M8	14
4	8010057150G0A0	REAR AXLE	1
5	9070002150G0A0	DRIVE CHAIN （52-530H)	1
6	8110077250G000	REAR SPROCKET (39T-530)	1
7	7000804012505	FLANGE BOLT M8×40	4
8	YF050003400700	DUST SEAL 50X34-7	2
9	8030008150G100	RR. AXLE BEARING HOUSING COMP	2
10	62062RS0000000	BEARING 6206-2RS	2
11	8020028150G100	BEARING BAS	2

12	57870804012505	FLANGE BOLT M8×40	6
13	YF042003000700	DUST SEAL 20X42-7	2
14	9710031250G000	TIRE BOLT M10×1.25×31	8
15	8010056150GHA0	REAR WHEEL HUB（metal wheel	2
16	7020052250G000	TIRE RR.22*10-10	2
17	6000143250G000	RIM, REAR WHEEL （metal ）	2
18	6000383250G000	REAR WHEEL ASSY.L.（metal wheel	1
19	61871000012505	LOCKING FLANGE NUT M10×1.25	8
20	97001600000005	GB97 WASHER Φ16	2
21	94571500015005	CASTLE NUT M16X1.5， GB9457	2
22	GB914004000002	COTTER PIN Φ4×40，GB91	2
23	7.020.039	HUB COVER （metal wheel	2
24	6000052250G000	REAR WHEEL ASSY.R.（metal wheel	1
25	7190018080G000	TIRE NIPPLE	2
26	6000149150G000	CHAIN MASTER LINK （530H）	1
	5410000150U002	REAR WHEELASSY.L. Al wheel	1
	5420000150U002	REARWHEELASSY.R. Al wheel	1
	5411000150U002	RIM, REAR WHEEL Aluminum	2
	8010089150U700	REAR WHEEL HUB Aluminum	2
	9710039250G100	TIRE BOLT M10×1.25×39	8
	7020039250G002	HUB COVER Aluminum wheel	2

Fig 25 WIRE HARNESS/ELECTRICAL

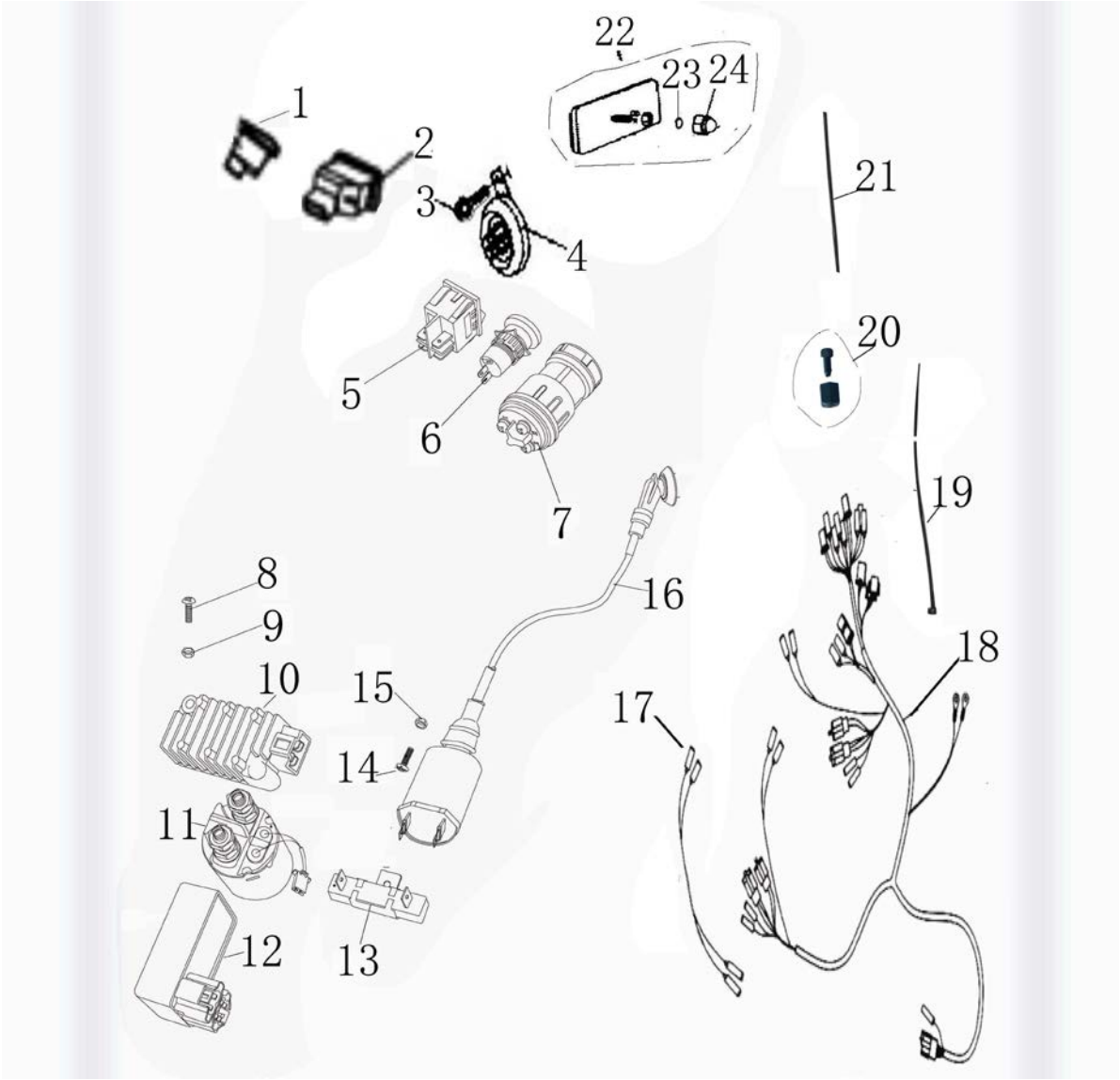

NO.	CODE	DESCRIPTION	QTY.
1	80031-K5	HORN switch	1
2	80032-K5	TURN SIGNAL LAMP switch	1
3	GB5789	FLANGE BOLT M6X12	1
4	80036-K5	HORN	1
5	80033-K5	headlamp switch	1
6	80034-K5	ENGINE STOP SWITCH	1
7	80035-K5	Ignition switch	1
8	81800603010004	GB818 BLOT M6X30	2
9	61870600010005	LOCKING FLANGE NUT M6	2
10	6000124150G000	voltage regulator	1
11	6000035250G000	STARTING RELAY	1
12	6000126150G000	CDI	1
13	6000038250G000	resistance	1
14	57870602510005	BOLT M6X25 ,GB5787	1
15	61870600010005	LOCKING FLANGE NUT M6	1

16	6000125150G000	IGNITION COIL	1
17	80026-K5	BATTERY CABLE	1
18	80025-K5	WIRE HARNESS	1
19	12111208035	ribbon	21
20	0001000250G000	Flagpole holder	1
21	0000100250G000	flagpole	1
22	8006000300K000	REAR REFLECTOR	1
23	97000500000005	GB97 WASHER Φ5	1
24	61700500010005	GB6170 NUT M5	1

Fig 26 BRAKE ASSY

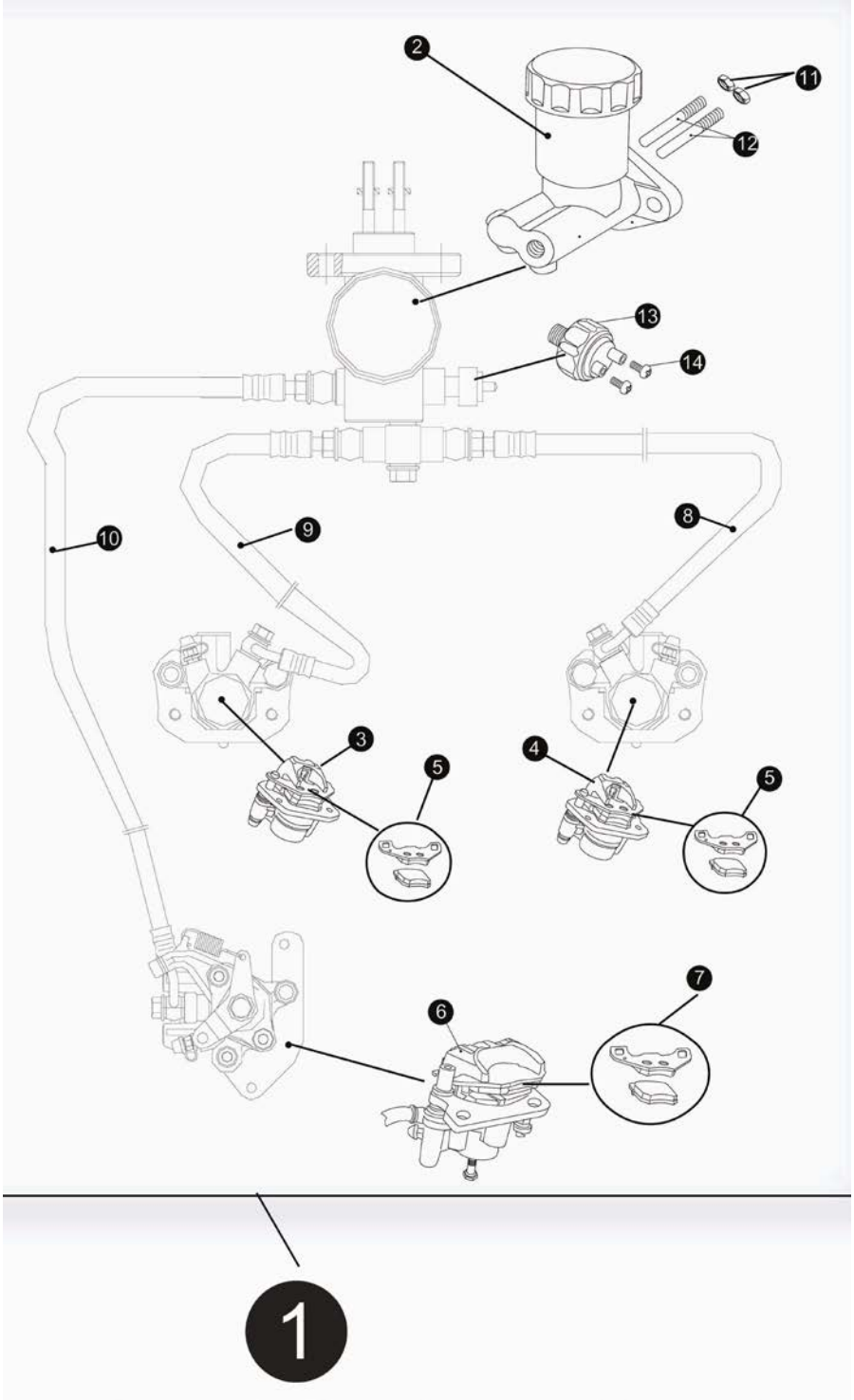

NO.	CODE	DESCRIPTION	QTY.
1	400000150G000	BRAKE ASSY.	1
2	6000076250G000	BRAKE MASTER CYLINDER	1
3	6000095250G000	FRONT BRAKE CALIPER R.	1
4	6000028250G000	FRONT BRAKE CALIPER L.	1
5	7020016250G000	FRONT BRAKE CALIPER PAD SET	2
6	6000229150G000	BRAKE CALIPER ASSY.RR	1
7	7020022150G000	REAR BRAKE CALIPER PAD SET	1
8	6000089250G000	HOSE ASSY.L.BRAKE	1

9	6000090250G000	HOSE ASSY.R.BRAKE	1
10	6000091150G000	HOSE ASSY.RR.BRAKE	1
11	8010081250G000	BRAKE SPINDLE PIN	1
12	61700800012505	NUT M8 ,GB6170	2

Fig 27 PLASTIC PLATE

NO.	CODE	DESCRIPTION	QTY.
1	65101-K5	Protection rod cover(R)	1
2	65102-K5	Protection rod cover(L)	1
3	65103-K5	Deco part(L)	1
4	65104-K5	Deco part(F)	1
5	65105-K5	Deco part(R)	1
6	81100-K5	Headlights(R)	1
7	GB6170	GB6170 NUT M6	4
8	81300-K5	Headlights(L)	1
9	65106-K5	Front fender	1
10	65107-K5	Left cover	1
11	9.116.006	Anchoring screw	11
12	65108-K5	Front hood	1
13	65109-K5	Right cover	1
14	65111-K5	Rear right cover	1
15	65112-K5	Hood top piece	1
16	GB2823	BOLT ST3.2X8	23
17	65113-K5	Rear Left cover	1
18	GB5787	BOLT M6X16 ,GB5787	2
19	65122-K5	Dash board	2
20	GB9074.6	BOLT M6X16 ,GB9074.6	3
21	6177060012505	GB6177 NUT M6	4
22	58047-80X-K5	Rear cover Mounting plate	2
23	65030-K5	HOSE CLAMP	2
24	65031-K5	Support sleeve	1
25	65032-K5	Front decoration cover	1
26	GB5787	BOLT M6X20 ,GB5787	8
27	GB5787	BOLT M6X8 ,GB5787	4
28	GB5787	BOLT M6X12 ,GB5787	18

Fig 27 STICKERS, ACCESORIES & MANUAL

NO.	CODE	DESCRIPTION	QTY.
1	90720-150U	Warning labels	1
2	90771-K5	Manual	1
3	90730-K5	Cheetah 150(x) sticker	1
4	90901-CHEETAH150	EPA Hang tag	1
5	90902-150U	EPA sticker	1
6	65060-K5	Side net	2

Fig 28 ADD-ON FEATURES FOR CHEETAH 150X ONLY

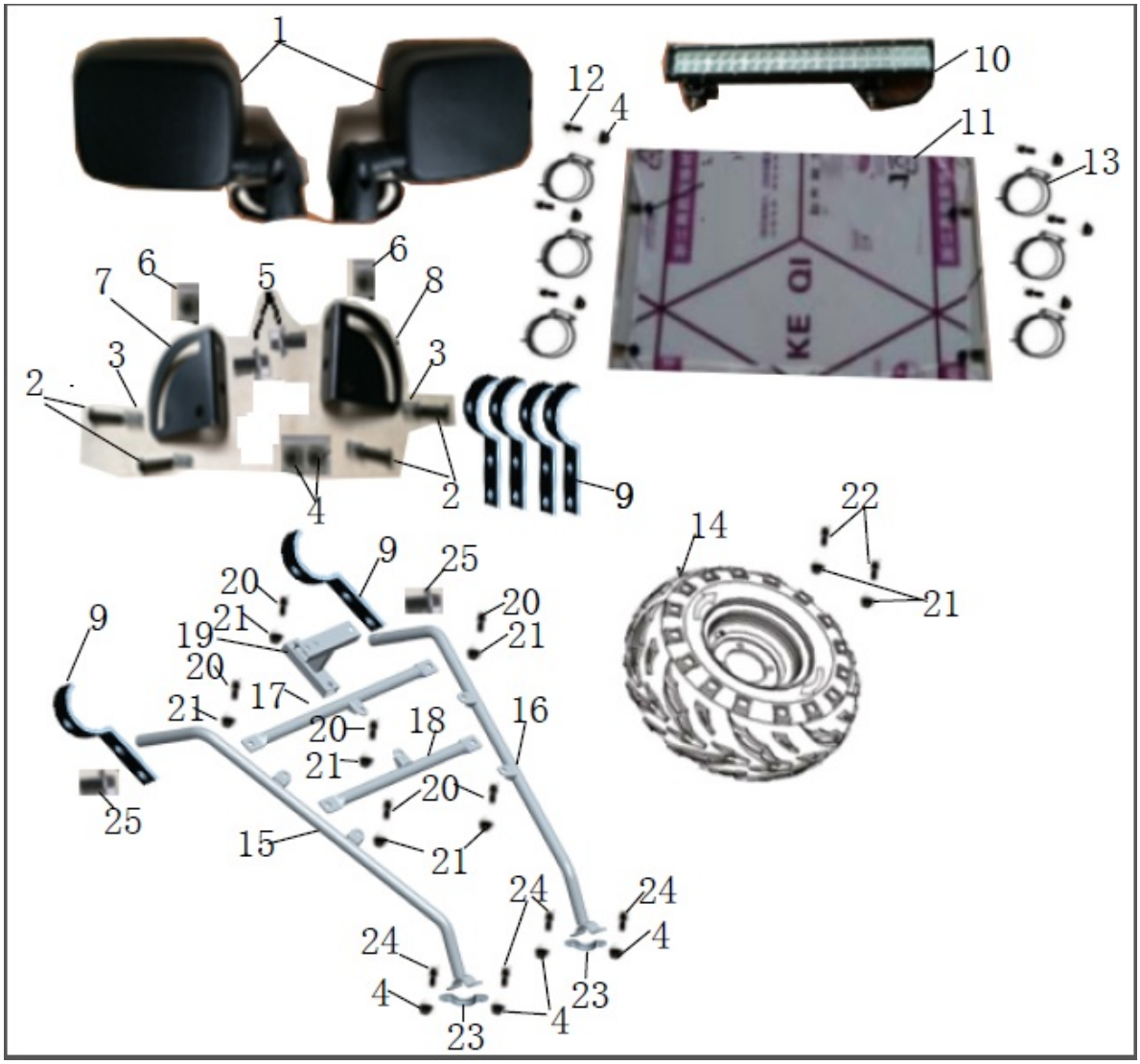

No.	CODE	DESCRIPTION	QTY.
1	8005000250G000	Rear view mirror	1
2	8.18006E+13	BOLT M6X30, GB818	4
3	57019-300UB	Rear view mirror SPRING	4
4	6.18706E+13	LOCKING NUT M6，GB6187	14
5	5.78708E+13	BOLT M8X20 ,GB5787	2
6	6.18708E+13	LOCKING NUT M8, GB6187	2
7	548001-300UB	Mirror mounting plate, R	1
8	548002-300UB	Mirror mounting plate, L	1
9	80081-150U	windshield mounting plate	6
10	80054-150UB-01	LED Light bar	1
11	65041-K5	windshield	1
12	5.78906E+13	BOLT M6X35 ,GB5789	6
13	65030-K5	Cage CLAMP	6
14	4410000150U002	FR.WHEEL ASSY.L. 22*7-10 Aluminum wheel	1
15	59410-K5	Spare tire mounting bracket，L	1

16	59420-K5	Spare tire mounting bracket，R	1
17	59430-K5	Spare tire mounting bracket，UP	1
18	59440-K5	Spare tire mounting bracket，DOWN	1
19	59450-K5	Spare tire mounting seat	1
20	57891002012505	BOLT M10X1.25X20，GB5789	6
21	61871000012505	NUT M10*1.25，GB6187	8
22	57891003012505	BOLT M10X1.25X30，GB5789	2
23	8.020.130	LOWER BRACKETS	2
24	57890602010005	BOLT M6X20 ,GB5789	4
25	57870801612505	BOLT M8X16 ,GB5787	2