Parts Manual

HELPING HAND ARM

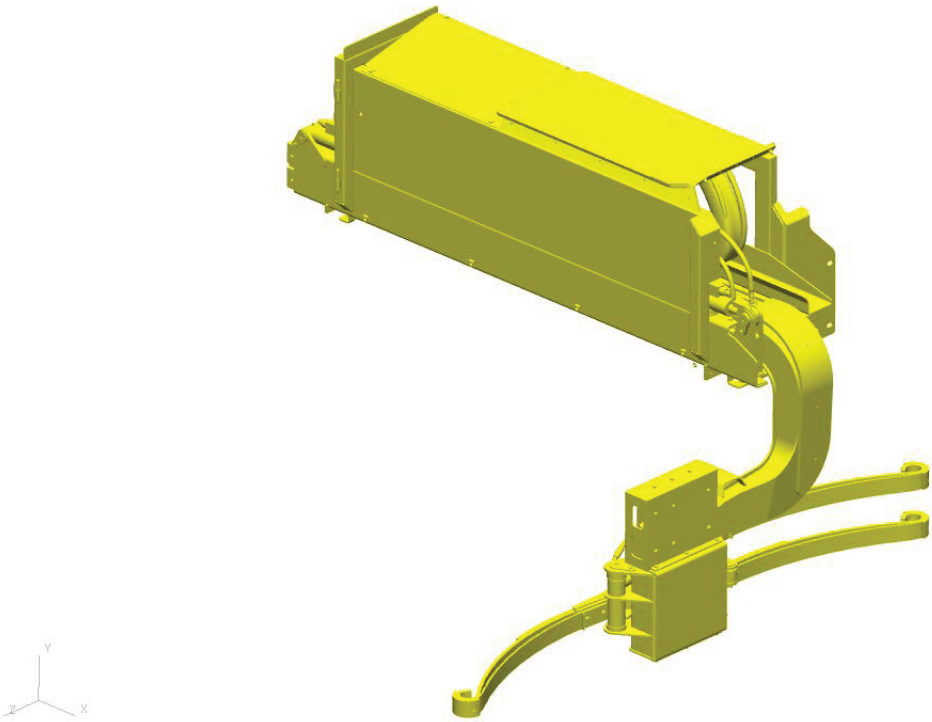

Labrie Enviroquip Group

equipment for the solid waste industry

labrieplus

Thank you for your purchase of a new Labrie Helping Hand Arm. To ensure maximim reliability, Insist on genuine **labrie*plus*** replacement parts. Labrie Plus replacement parts are designed and manufactured to exacting standards. The use of counterfeit, will-fit or substitute parts may effect the operation and performance of the unit.

Visit our web site at www.labrieplus.com, or contact us at 1-800-231-2771, twenty four hours a day, seven days a week. We are available to help you with any questions or concerns

labrie
Labrie Enviroquip Group
equipment for the solid waste industry

LABRIE LEACH WITTKE

TABLE OF CONTENTS

LABRIE PLUS 1
TABLE OF CONTENTS. 2
CAPSCREW MARKING and TORQUE VALUES CHART 3

SECTION 1 Arm Assembly
Mounting Brackets 5
Valve Covers 7
Arm Base 9
Arm Base - Long Reach. 11
Arm Middle Extension - Long Reach 13
Arm Slide Assembly. 15
Arm Assembly 17
Deflector. 19
Split Cart Deflector & Divider 21

SECTION 2 Gripper Assembly
Gripper Assembly. 23
Gripper Link Arm 26

SECTION 3 Hydraulics
Arm Hydraulics, (See Page for Arm Models) . . . 27
Arm Hydraulics, BCB00501-05 & -06, (See Page for Arm Models) 29
Arm Hydraulics, Long Reach 33

SECTION 4 Arm Control Valve
Arm Control Valve 37
Sequence Valve - HYV08110. 40

SECTION 5 Electrical
Arm Electrical. 41

SECTION 6 Cylinders
Inside Extension Cylinder, Std. & Long Reach 43
Outside Extension Cylinder, Long Reach . . . 44
Arm Lift Cylinder, 1.25” Pin - HYC00356.. 45
Gripper Cylinder, HYC00166-01 46
Grabber Cylinder W/Holding Valve - HYC00235 . 47

CAPSCREW MARKING AND TORQUE VALUES

Usage	Much Used	Used at Times	Used at Times
Capscrew Diameter & Minimum Tensile Strength PSI	To 3/4 - 120,000 To 1 - 115,000	To 5/8 - 140,000 To 3/4 - 133,000	150,000
Quality of Material	Min. Commercial	Med. Commercial	Best Commercial
SAE Grade Number	5	6 or 7	8
CAPSCREW HEAD MARKINGS Manufacturers marks may vary. These are all SAE Grade 5 (3-line.)			
Capscre w Bod y Size (Inches) - (Thread)	Torque Ft-Lb (kg m)	Torque Ft-Lb (kg m)	Torque Ft-Lb (kg m)
1/4 - 20	8 (1.11)	10 (1.38)	12 (1.66)
- 28	10 (1.38)		14 (1.94)
5/16 - 18	17 (2.35)	19 (2.63)	24 (3.32)
- 24	19 (2.63)		27 (3.73)
3/8 - 16	31 (4.29)	34 (4.70)	44 (6.09)
- 24	35 (4.84)		49 (6.78)
7/16 - 14	49 (6.78)	55 (7.61)	70 (9.68)
- 20	55 (7.61)		78 (10.79)
1/2 - 13	75 (10.37)	85 (11.76)	105 (14.52)
- 20	85 (11.76)		120 (16.60)
9/16 - 12	110 (15.21)	120 (16.60)	155 (21.44)
- 18	120 (16.60)		170 (23.51)
5/8 - 11	150 (20.75)	167 (23.10)	210 (29.04)
- 18	170 (23.51)		240 (33.19)
3/4 - 10	270 (37.34)	280 (38.72)	375 (51.86)
- 16	295 (40.80)		420 (58.09)
7/8 - 9	395 (54.63)	440 (60.85)	605 (83.67)
- 14	435 (60.16)		675 (93.35)
1 - 8	590 (81.60)	660 (91.28)	910 (125.85)
- 14	660 (91.28)		990 (136.92)

NOTES:

1. *Always use the torque values listed above when specific torque values are not available.*
2. *The above is based on use of clean, dry threads.*
3. *Reduce torque by 10% when engine oil is used as a lubricant.*
4. *Reduce torque by 20% if new plated capscrews are used.*
5. *General Formula for calculating Torques is as follows: Torque in Inch Lbs. = .2 x Nominal Diameter of Screw x Loads in Lbs., where Load = 80% of Yield Strength, expressed in Lbs., not pounds per square inch.*

SECTION 1

MOUNTING BRACKETS

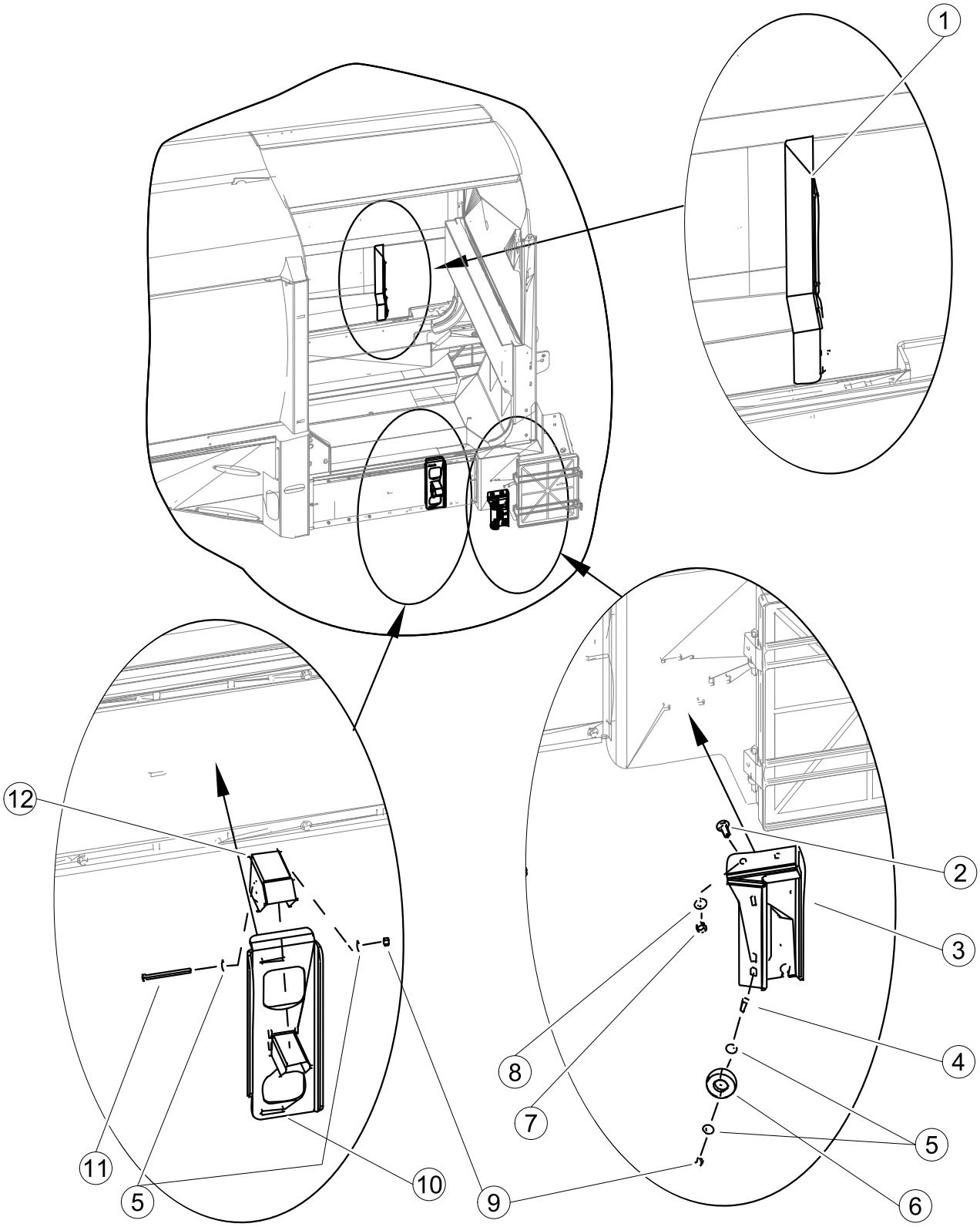

MOUNTING BRACKETS

REF. NO.	PART NO.	DESCRIPTION	QTY.
1	82355	DEFLECTOR, Std. Helping Hand	1
	82691	DEFLECTOR, Long Reach Helping Hand	1
2	QUB12050	BOLT	2
3	82052	BRACKET	1
4	QUB03500	BOLT	2
5	QUR01900	WASHER	8
6	QUB00075	BUMPER	2
7	QUE01500	WASHER	2
8	QUR01905	WASHER	2
9	QUE01300	NUT	4
10	69567	BRACKET	1
11	QUB04050	BOLT	2
12	69575	BRACKET, Arm Rest	1

VALVE COVERS

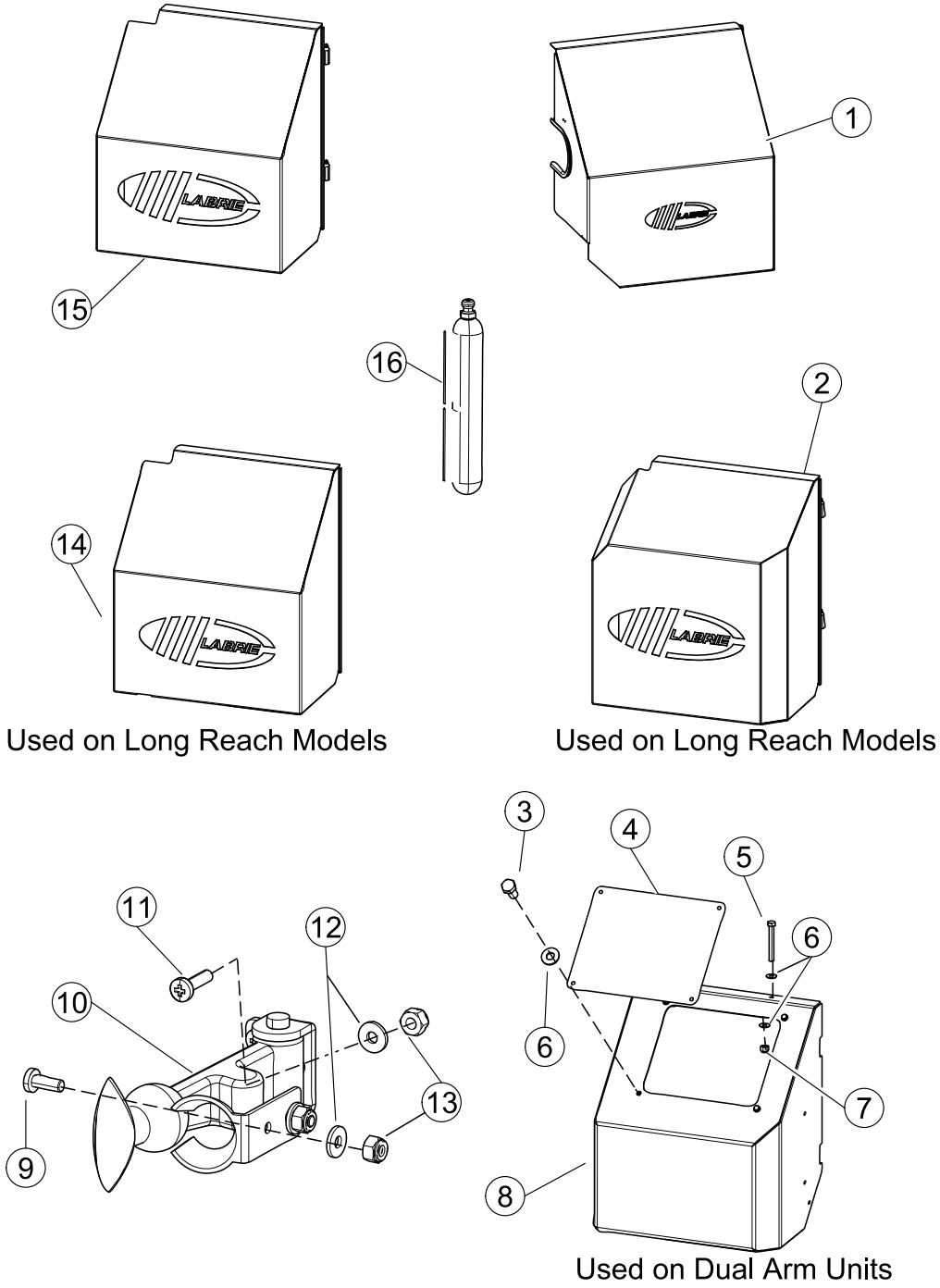

VALVE COVERS

REF. NO.	PART NO.	DESCRIPTION	QTY.
1	64584	COVER, Valve, Slot on side	1
2	158647	COVER, Valve - Long Reach Units	1
3	QUB03360	BOLT	4
4	82388	COVER, Access	1
5	QUB04005	BOLT	A/R
6	QUR01902	WASHER	A/R
7	QUE01302	NUT	2
8	88899	COVER, Valve - Dual arm Units	1
9	QUV00715	BOLT	2
10	QUP01450	HOLD Down Assy. - Rubber	1
11	QUV00740	BOLT	2
12	QUR01600	WASHER	4
13	QUE01070	NUT	4
14	143071	COVER, Valve - Long Reach Units	1
15	77500	COVER, Valve	1
16	QUP01905	HINGE Assembly	A/R

SECTION 1

ARM BASE

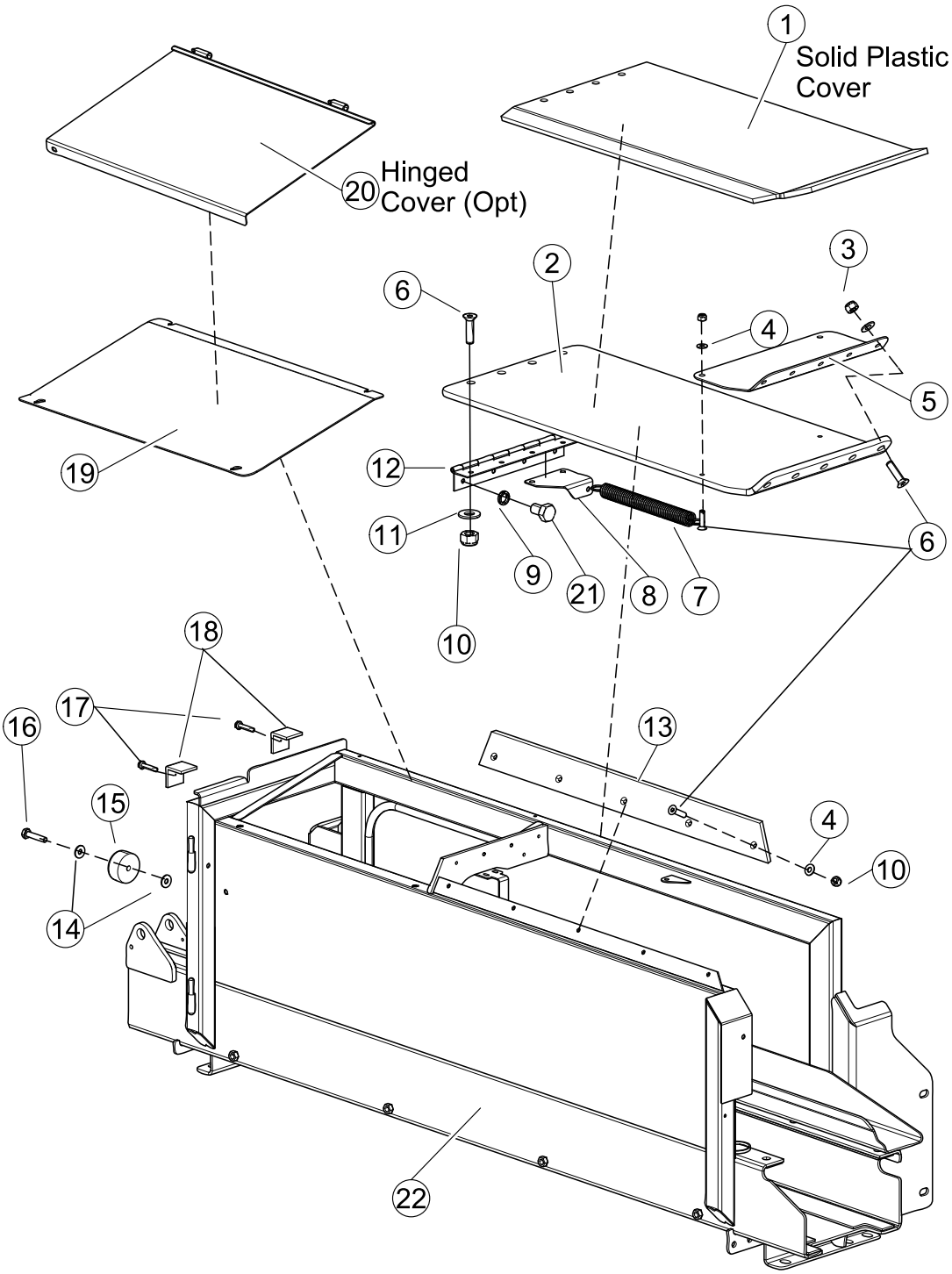

ARM BASE

REF. NO.	PART NO.	DESCRIPTION	QTY.
1	64580	LID, Plastic (Used ON Arm BCB00500-03)	1
2	91530	LID, Plastic, Reinforced Edge	1
3	QUE01200	NUT	7
4	QUR01800	WASHER	12
5	90531	BRACKET, Reinforcement	1
6	QUB02917	BOLT	12
7	67902	SPRING	1
8	64581	BRACKET	1
9	QUR01270	WASHER	8
10	QUE01205	NUT	9
11	QUR01800	WASHER	8
12	64587	HINGE	1
13	64582	SUPPORT - Plastic	1
14	QUR01695	WASHER	2
15	QUB01300	BUMPER, Rubber	1
16	QUB02160	BOLT	1
17	QUV08010	BOLT	2
18	64585	STOP - Plastic	2
19	77510	COVER	1
20	64599	COVER - Hinged (Option)	1
21	QUB02601	BOLT	4
22	64562	FRAME - (Used on Arms: BCB00500-03)	1
	67816	FRAME - (Used on Arms: BCB00500-07, BCB00550-04 & -07)	1
	80525	FRAME - (Used on Arms: BCB00501-03 & -04)	1
	155706	FRAME - (Used on Arms: BCB00501-05, -06 & -07 also BCB00515-06 & -07)	1
	81172	FRAME - (Used on Arms: BCB00504-00 & BCB00504-01)	1
	155744	FRAME - (Used on Arms: BCB00504-02, BCB00511-00, -01 & -02 also BCB00525-01 & -02)	1
	88201	FRAME - (Used on Arms: BCB00507-00)	1
	88481	FRAME - (Used on Arms: BCB00508-00 & BCB00508-01 also BCB00509-00 & BCB00518-01)	1
	81926	FRAME - (Used on Arms: BCB00505-00)	1
	77504	FRAME - (Used on Arms: BCB00501-02)	1
	143043	FRAME - Long Reach - (Used on Arms BCB00700-02, -04 -05 & -06)	1
	154027	FRAME - Long Reach - (Used on Arms BCB00706-01)	1
	83697	FRAME - Long Reach - (Used on Arms BCB00707-00)	1

ARM BASE - LONG REACH (USED FOR ARMS BCB00700-01 THRU BCB00700-04)

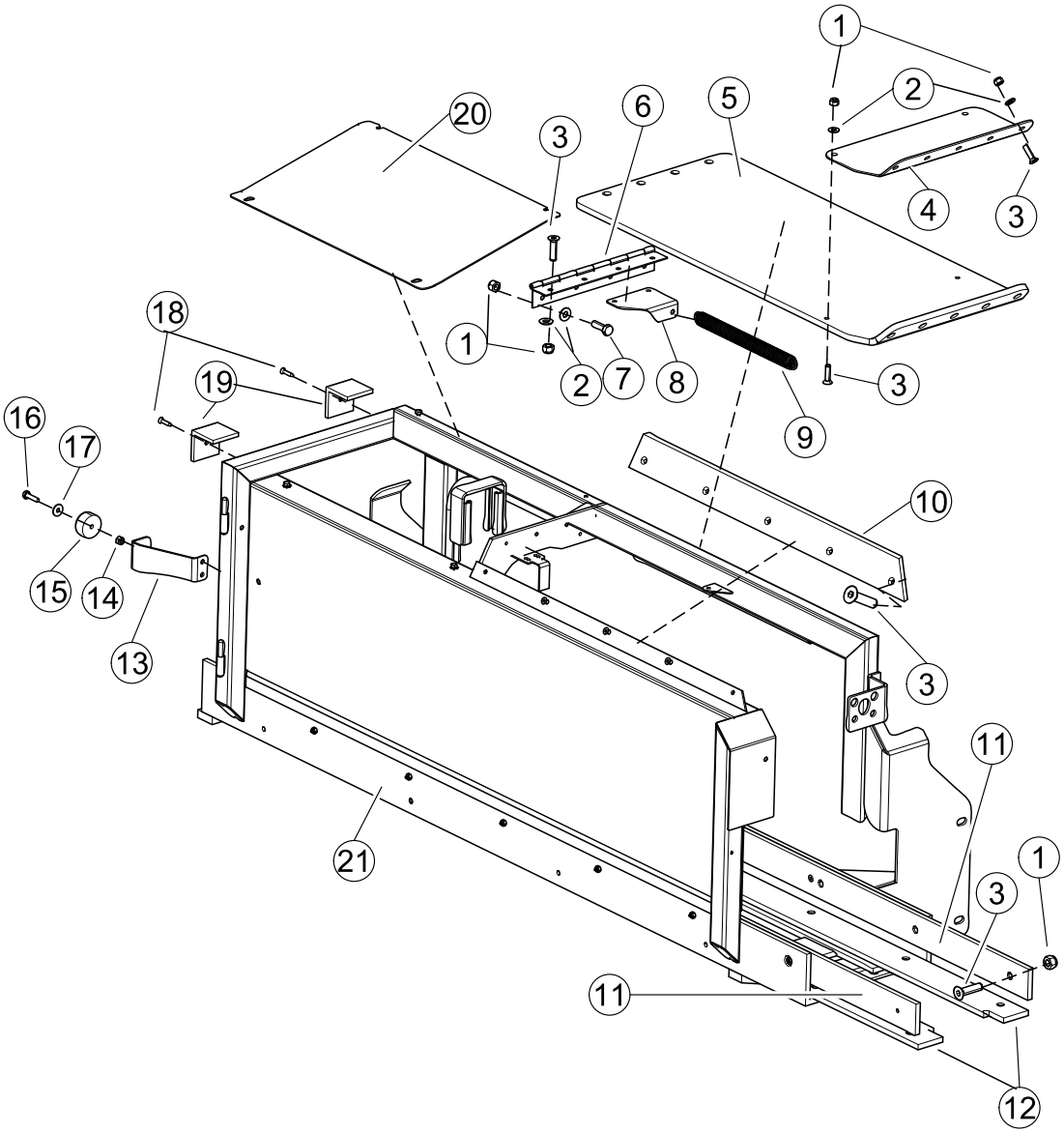

ARM BASE - LONG REACH (USED FOR ARMS BCB00700-01 THRU BCB00700-04)

REF. NO.	PART NO.	DESCRIPTION	QTY.
1	QUE01200	NUT	48
2	QUR01800	WASHER	15
3	QUB02917	BOLT	48
4	91531	BRACKET, Reinforcement	1
5	91530	COVER, Plastic	1
6	64587	HINGE	1
7	QUB02800	BOLT	4
8	64581	BRACKET	1
9	67902	SPRING	1
10	64582	SUPPORT, Plastic	1
11	143056	WEAR STRIP - Plastic	2
12	143057	WEAR STRIP - Plastic	2
13	85293	BRACKET, Bumper	1
14	QUE01100	NUT	1
15	QUB01300	BUMPER, Rubber	1
16	QUB02100	BOLT	1
17	QUR01705	WASHER	1
18	QUV03132	BOLT	2
19	64585	STOP - Plastic	2
20	77510	COVER	1
21	143043	FRAME - (Used on Arms: BCB00700-02, -04, -05 & -06 Also BCB00706-00)	1
	154027	FRAME - (Used on Arms: BCB00706-01)	1
	83687	FRAME - (Used on Arms: BCB00707-00)	1

ARM MIDDLE EXTENSION - LONG REACH - ALL MODELS

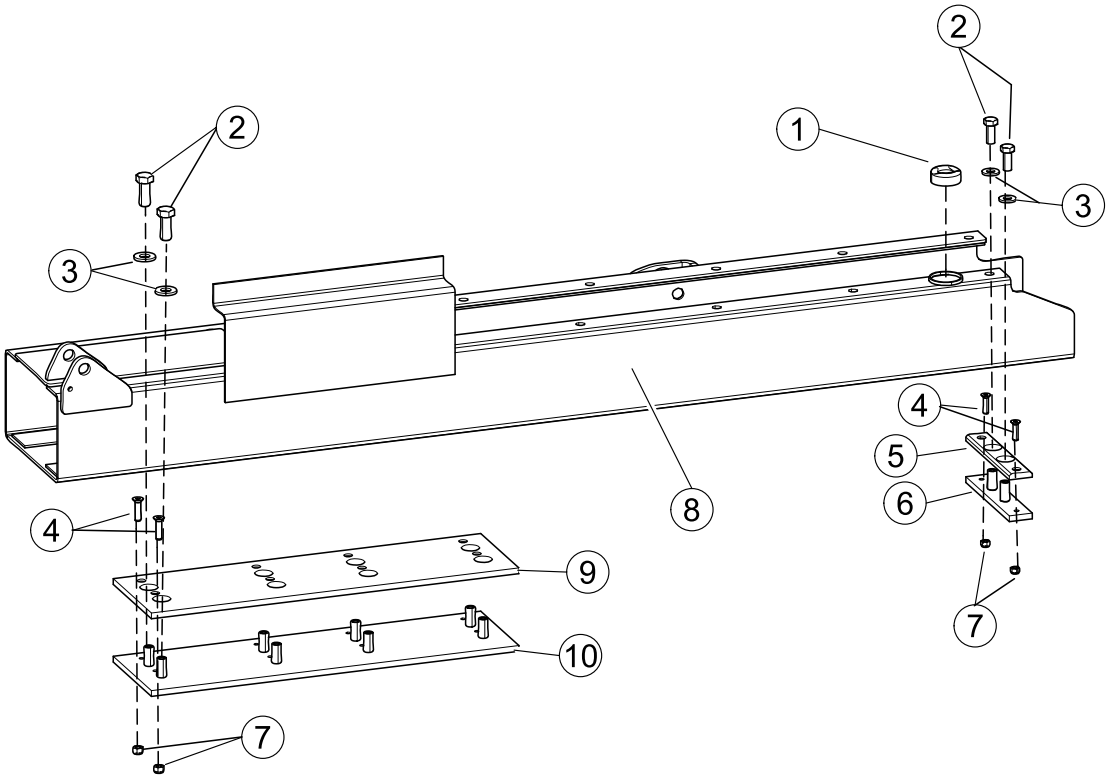

REF. NO.	PART NO.	DESCRIPTION	QTY.
1	143372	BUMPER, Rubber - Machined	1
2	QUB04411	BOLT	10
3	QUR01912	WASHER	10
4	QUB02917	BOLT	10
5	143108	WEAR SHOE - Plastic	1
6	143062	RETAINER, Shoe	1
7	QUE01200	NUT	10
8	143051	FRAME	1
9	143107	WEAR SHOE - Plastic	1
10	143055	RETAINER, Shoe	1

SECTION 1

ARM SLIDE ASSEMBLY

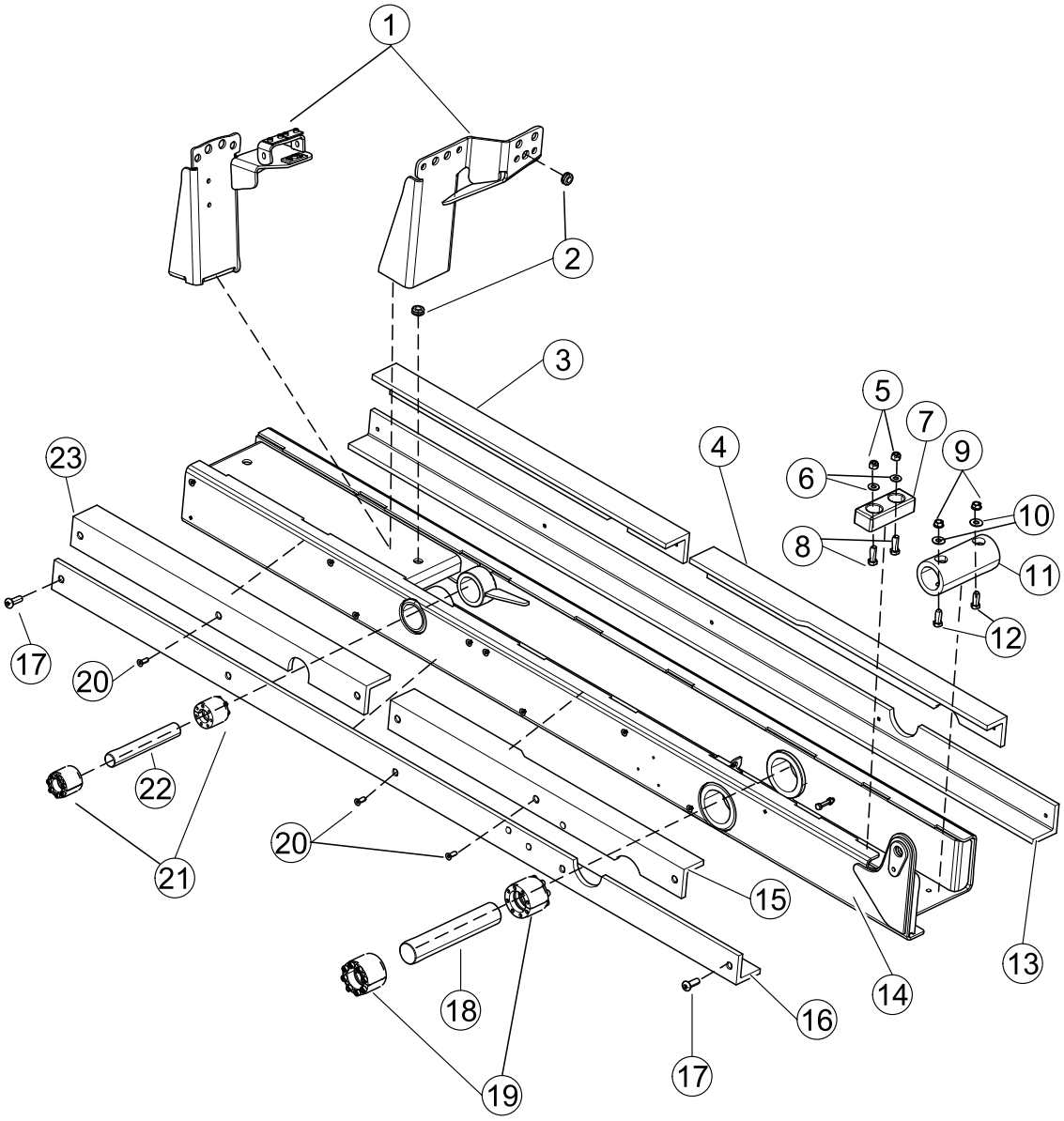

ARM SLIDE ASSEMBLY

REF. NO.	PART NO.	DESCRIPTION	QTY.
1	64528	BRACKET, Hose Connection - Bulkhead Style	1
	155712	BRACKET, Hose Connection - Clamp Style	1
2	QUG01500	GROMMET	2
3	64540	WEAR SHOE - Plastic	1
4	64541	WEAR SHOE - Plastic	1
5	QUE01200	NUT	2
6	QUR01800	WASHER	2
7	QUC00030	BUMPER	1
8	QUB02800	BOLT	2
9	QUE01995	NUT	2
10	QUR01900	WASHER	2
11	QUC00055	BUMPER	1
12	QUB03400	BOLT	2
13	64539	WEAR SHOE - Plastic	1
14	64525	HOUSING (Used on Arms BCB00500-03, -04 & -07; BCB00501-00, -01, -02, -03 -04 -05 -06 & -07; BCB0503-00 & -01; BCB00504-00, -01 & -02: BCB00505-00;BCB00507-00; BCB00508-00 & -01; BCB00511-00; BCB00515-06 & -07; BCB00518-01 and BCB00525-01 & -02)	1
15	64550	WEAR SHOE - Plastic	1
16	64551	WEAR SHOE - Plastic	1
17	QUV02607	BOLT	16
18	64507	SHAFT	1
19	QUG00498	COLLAR, Shaft	2
20	QUB05504	BOLT	6
21	QUG00495	COLLAR, Shaft	2
22	64504	SHAFT	1
23	64549	WEAR SHOE - Plastic	1

ARM ASSEMBLYS

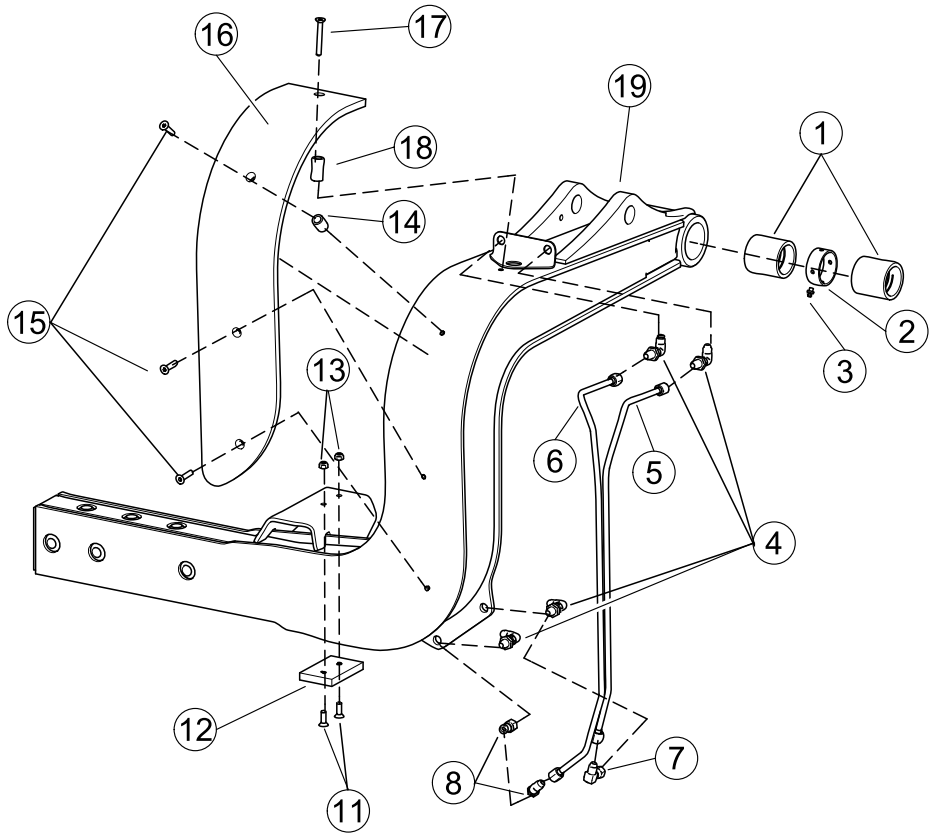

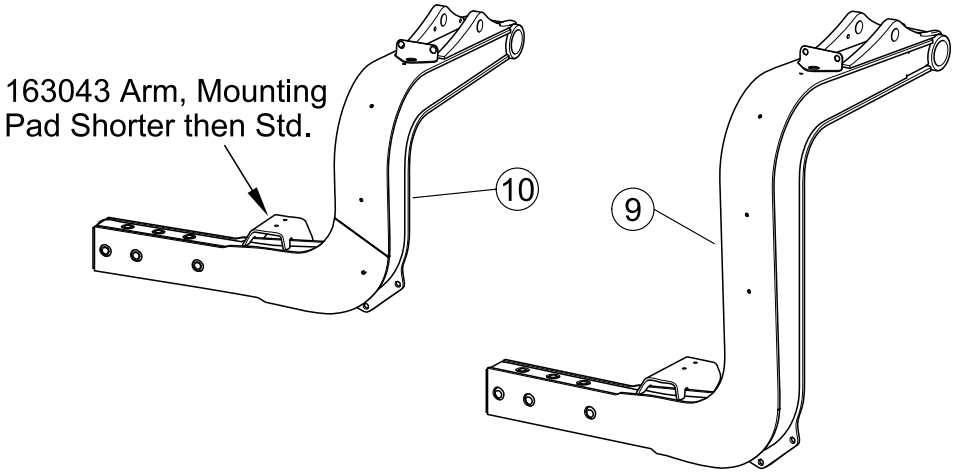

154370 Longer Arm
Drop Then Std.

ARM ASSEMBLYS

REF. NO.	PART NO.	DESCRIPTION	QTY.
1	174178	BUSHINGS (Note: After Installation Bushing Must Be Reamed to I.D. 2.002+.002/-.000)	2
2	67826	SPACER, Bushing	1
3	QUG00500	FITTING, Grease	1
4	HYF06790	ELBOW, Bulkhead - JIC	4
	HYF06791	ELBOW, Bulkhead - ORFS	4
5	81159	TUBE - JIC	1
	88260	TUBE - ORFS	1
	154377	TUBE - ORFS - (Arm 154370 (BCB00509-00) Only)	1
	67845	TUBE - JIC (Used On Arms: BCB00550-03 & BCB00550-04)	1
6	81158	TUBE - JIC	1
	88259	TUBE - ORFS	1
	154376	TUBE - ORFS - (Arm 154370 (BCB00509-00 Only)	1
	67846	TUBE - JIC (Used On Arms: BCB00550-03 & -04)	1
7	HYF07950	ELBOW - JIC	1
	HYF07415	ELBOW - ORFS	1
8	HYF07840	ELBOW - JIC - 45°	2
	HYF07841	ELBOW - ORFS - 45°	2
9	154370	WELDMENT, Arm - (Arm BCB00509-00 Only	1
	154378	ASSY., Arm-(Arm 154370 W/Bushings Item #1 & Spacer Item #2)	1
10	163043	WELDMENT, Arm-(Arm BCB00525-01 & -02 Also BCB00511-01 & -02)	1
	174184	ASSY., Arm-(Arm 163043 W/Bushings Item #1 & Spacer Item #2)	1
11	QUB05504	BOLT	2
12	64524	PAD - Plastic	1
13	QUE01200	NUT	2
14	81156	SPACER - 1” Lg.	1
15	QUB03005	BOLT	3
16	81160	GUARD - Plastic	1
17	QUB03218	BOLT	1
18	64590	SPACER - 1½” Lg.	1
19	85446	WELDMENT, Arm	1
	157973	ASSY., Arm - W/Bushings Item #1 & Spacer Item #2)	1
		Note: Item #19 P/N85446 or P/N157973 are used on the following Arm assembly’s: BCB00500-03, -04 & -07, BCB00501-00, -04, -05, -06 & -07, BCB00503-01, BCB00504-01, BCB00505-00, BCB00507-00, BCB00508-00 & -01, BCB00511-01 & -02, BCB00515-06 & -07, BCB00518-01, BCB00550-03, -04 & -07, BCB00700-01, -02, -04, -05 & -06, BCB00702-05 & -06, BCB00706-01, BCB00707-01	

DEFLECTOR

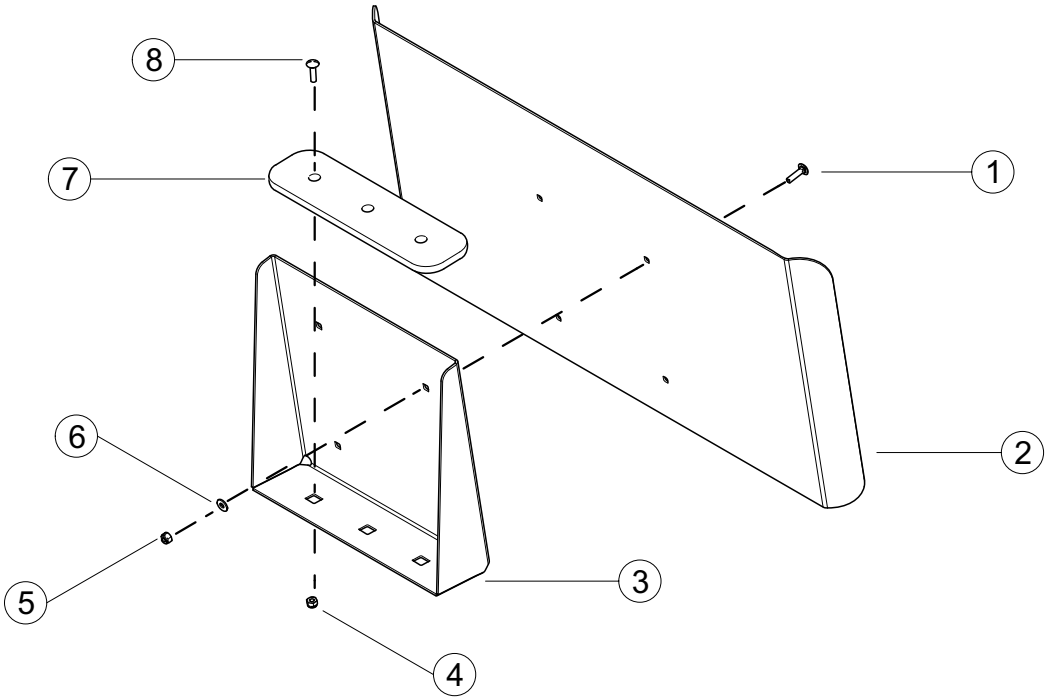

REF. NO.	PART NO.	DESCRIPTION	QTY.
1	QUB00870	BOLT	4
2	93751	PLATE, Deflector	1
3	93750	BRACKET	1
4	QUE02000	NUT	3
5	QUE01100	NUT	4
6	QUR01700	WASHER	4
7	64619	PLATE, Backing	1
8	QUB12050	BOLT	3

SPLIT CART, DEFLECTOR & DIVIDER

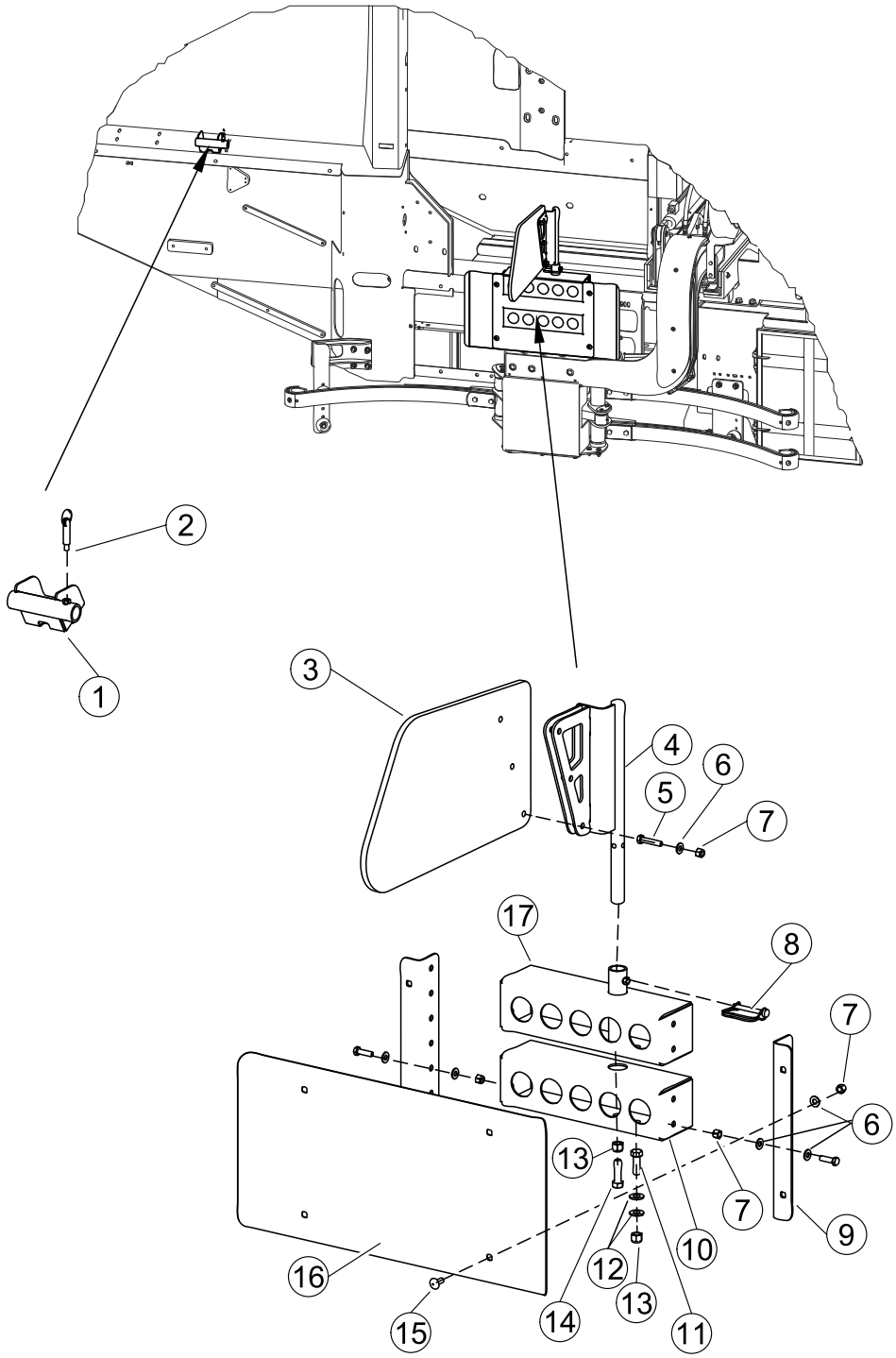

SPLIT CART, DEFLECTOR & DIVIDER

REF. NO.	PART NO.	DESCRIPTION	QTY.
1	163627	BRACKET, Storage	1
2	QUP10000	PIN	1
3	163626	DIVIDER, Plastic	1
4	163712	BRACKET, Divider Pivot	1
5	QUB03730	BOLT	3
6	QUR01902	WASHER	23
7	QUE01302	NUT	12
8	QUP02408	PIN, Retainer	1
9	163624	BRACKET, Mounting	2
10	163622	BRACKET, Separator - Lower	1
11	QUE04503	BOLT	3
12	QUR01912	WASHER	6
13	QUE01500	NUT	4
14	QUB04601	BOLT	1
15	QUB11935	BOLT, Carriage	4
16	163625	DEFLECTOR	1
17	163623	BRACKET, Separator - Upper	1

GRIPPER ASSEMBLY

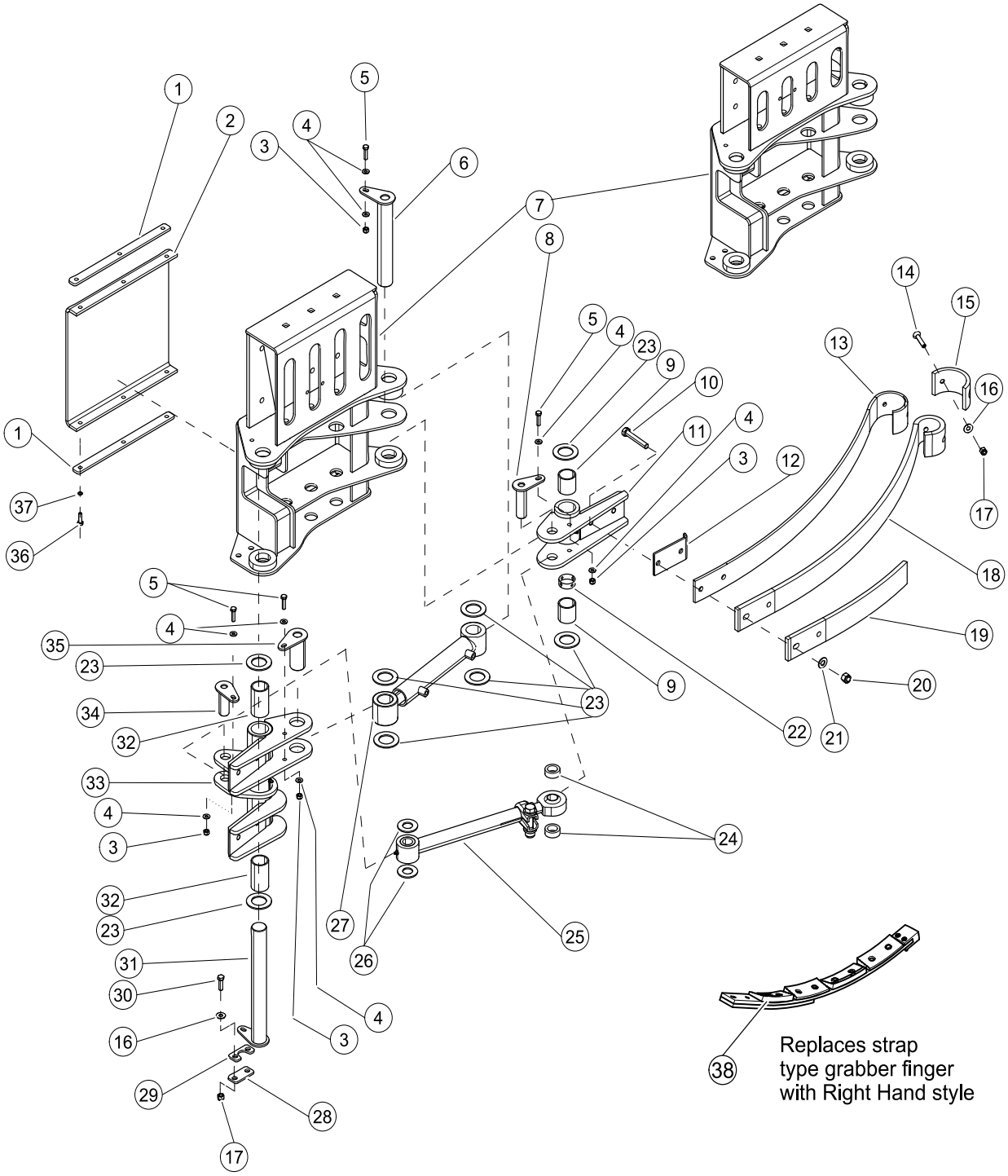

GRIPPER ASSEMBLY

REF. NO.	PART NO.	DESCRIPTION	QTY.
1	64643	PLATE	2
2	64642	BUMPER	1
3	QUE01200	BOLT	4
4	QUR01800	WASHER	8
5	QUB02900	BOLT	4
6	64684	PIN	1
7	67829	WELDMENT, Grabber Assembly (Used on the Following Arms:BCB00499-00, BCB00500-04 & -07, BCB00501-00 & -01, BCB 00550-04 & -07)	1
	88216	WELDMENT, Grabber Assembly (Used on the Following Arms: BCB00507-00, BCB00508-00 & -01, BCB00518-01)	1
	166769	WELDMENT, Grabber Assembly (Used on the Following Arm: BCB00525-02)	1
	80125	WELDMENT, Grabber Assembly (Used on the Following Arms: BCB00501-02, -03, -04, -05, -06 & -07, BCB00503-00 & -01, BCB00504-00 & -01, BCB00505-00, BCB00509-00, BCB00515-06 & -07, BCB00700-01, -02, -04, -05 & -06, BCB00702-05 & -06, BCB00706-00 & -01, BCB00707-00)	1
8	64688	PIN	1
9	QUB00481	BUSHING	6
10	QUB04828	BOLT	6
11	64625	PIVOT	1
	64611	ASSEMBLY, Pivot (Includes Items 9, 11 & 22)	1
12	75262	PLATE, Retainer	3
13	64638	STRAP, Rubber - OAL = 41.44” (Used With #64634)	3
	165521	STRAP, Rubber - OAL = 40.75” (Used With #165520)	3
14	QUV02723	BOLT	6
15	64635	END, Grabber Arm	3
16	QUR01900	WASHER	8
17	QUE01300	NUT	8
18	64634	ARM, Grabber - Large Radius	3
	165520	ARM, Grabber - Smaller Radius	3
19	64636	SUPPORT, Grabber Arm - (Used With #64634)	3
	165529	SUPPORT, Grabber Arm - (Used With #165520)	3
20	QUE01500	NUT	6
21	QUR01905	WASHER	6
22	67855	SPACER, Bearing	1
23	QUB00459	THRUST BEARING	8
24	64601	SPACER	2
25	64612	ASSEMBLY, Linkage	1
26	QUB00457	THRUST BEARING	2

SEE NEXT PAGE

GRIPPER ASSEMBLY

REF. NO.	PART NO.	DESCRIPTION	QTY.
27	HYC00166-01	CYLINDER, Grabber - (Used on the Following Arms: BCB00501-02, -03, -04 & -05, BCB00503-00 & -01, BCB00504-00, -01 & -02, BCB00505-00, BCB00507-00, BCB00508-00, BCB00511-00 & -01, BCB00515-06, BCB00525-01, BCB00550-07, BCB00700-01, -02 -04 & -05, BCB00702-05, BCB00706-01, BCB00707-00, BCB01115-00, BCB01116-00.)	1
	HYC00235	CYLINDER, Grabber - With Integrated Holding Valve - (Used on the Following Arms: BCB00501-07, BCB00508-01, BCB00515-07, BCB00518-01, BCB00700-06, BCB00702-06)	1
28	64645	RETAINER	1
29	64644	RETAINER	1
30	QUB03500	BOLT	2
31	64682	PIN	1
32	QUB00482	BUSHING	2
33	64626	PIVOT	1
	64610	ASSEMBLY, Pivot (Includes Items 32 & 33)	1
34	64686	PIN	1
35	64690	PIN	1
36	QUB02800	BOLT	6
37	QUR01270	WASHER	6
38	163060	GRABBER ASSEMBLY - Right Hand Style	A/R

GRIPPER LINK ARM

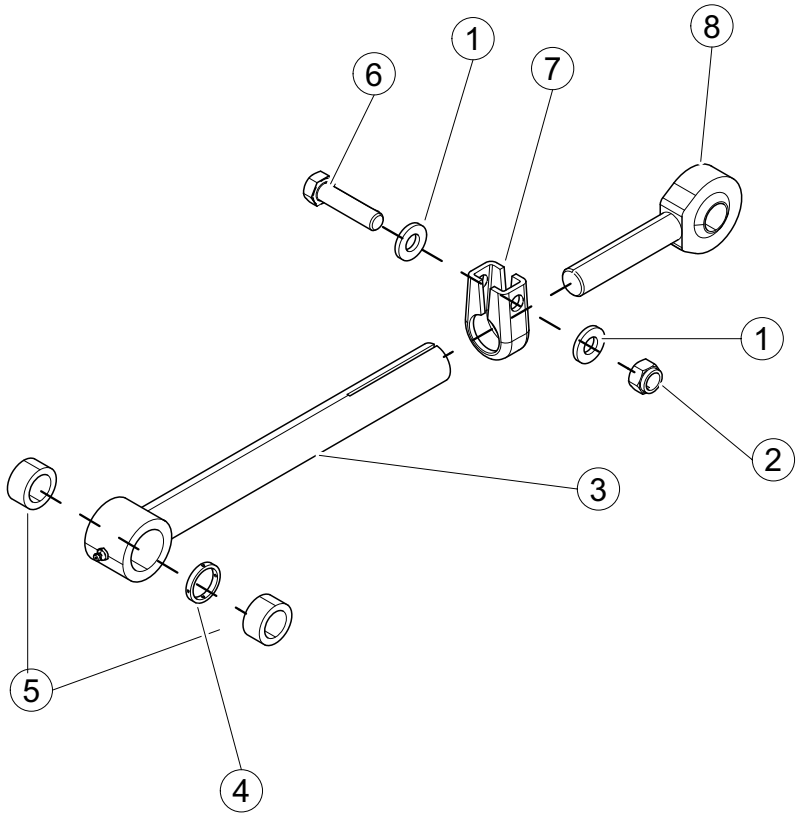

REF. NO.	PART NO.	DESCRIPTION	QTY.
1	QUR02130	WASHER	2
2	QUE00880	NUT	1
3	64613	TUBE, Linkage	1
4	67856	SPACER	1
5	64544	BUSHING	2
6	QUB05325	BOLT	1
7	QUC09950	CLAMP	1
8	QUT00200	ROD END	1

ARM HYDRAULICS - BCB00501-00 Thru -04, BCB00500-00, BCB00503-00, BCB504-00, BCB00504-01

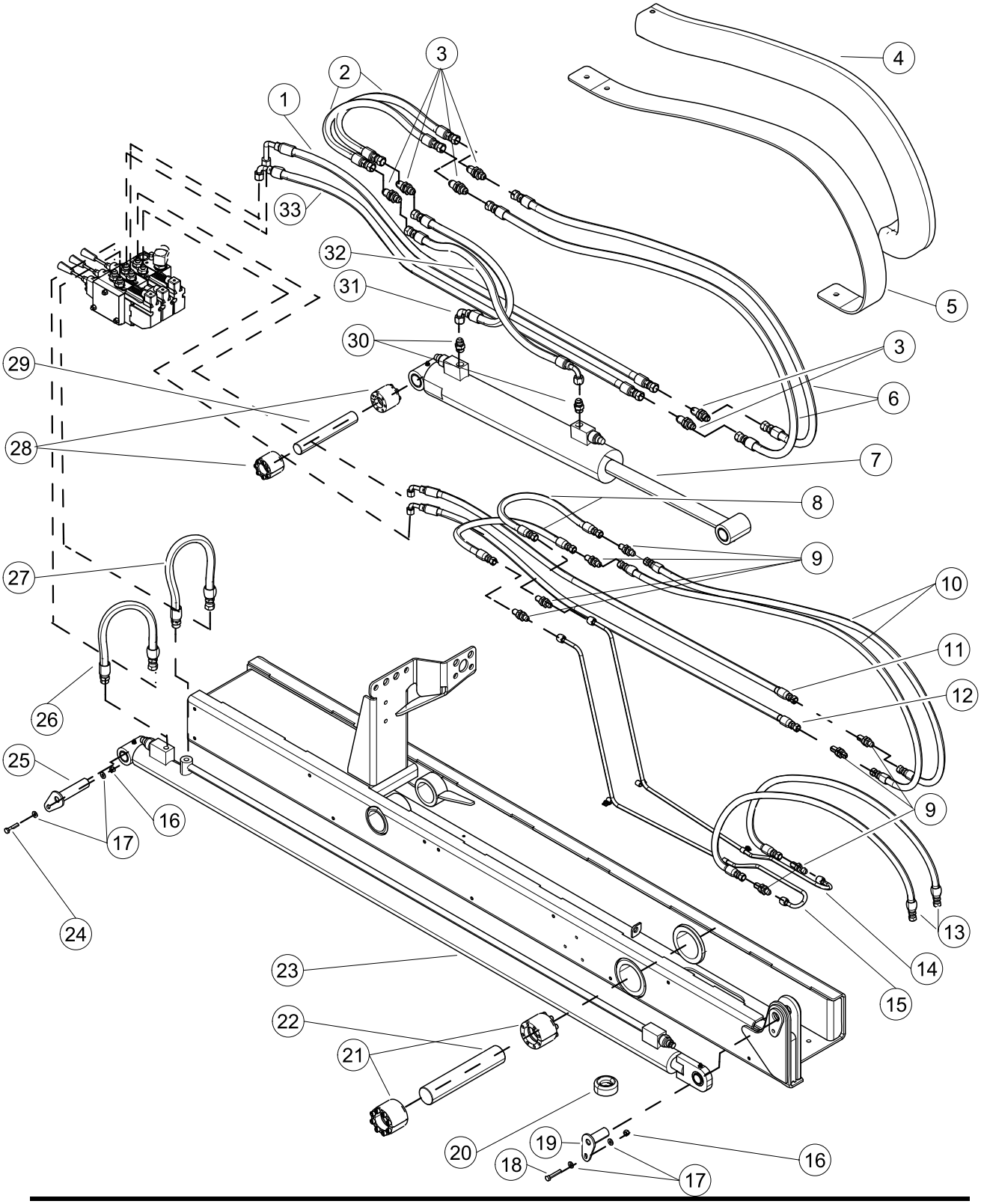

ARM HYDRAULICS - BCB00501-00 Thru -04, BCB00500-00, BCB00503-00, BCB504-00, BCB00504-01

REF. NO.	PART NO.	DESCRIPTION	QTY.
1	64664	HOSE	1
2	64659	HOSE	2
3	HYF06500	CONNECTOR	6
4	HYB03780	PROTECTOR	PER INCH
5	64646	REINFORCEMENT	1
6	64561	HOSE	2
7	HYC00356	CYLINDER - 1.25” DIA PINS	1
	HYC00357	CYLINDER - 1.00” DIA PINS (BCB00501-00 and Earlier arms)	1
8	64660	HOSE	2
9	HYF06490	CONNECTOR	8
10	64603	HOSE	2
11	64662	HOSE	1
12	64661	HOSE	1
13	67809	HOSE	2
14	82114	TUBE (BCB00501-03 & -04)	1
	64652	TUBE (BCB00501-00, -01 & -02)	1
15	82113	TUBE (BCB00501-03 & -04)	1
	64651	TUBE (BCB00501-0000, -01 & -02)	1
16	QUE01200	NUT	3
17	QUR01800	WASHER	6
18	QUB03051	BOLT	2
19	64509	PIN	1
20	QUB00075	BUMPER	1
21	QUB00498	COLLAR, Pin	2
22	64507	PIN	1
23	HYC00191	CYLINDER	1
24	QUB03000	BOLT	1
25	64502	PIN	1
26	64655	HOSE	1
27	64655	HOSE	1
28	QUB00495	COLLAR, Pin	2
29	64504	PIN	1
30	HYF05110	ADAPTER	2
31	26506	HOSE	1
32	12546	HOSE	1
33	64663	HOSE	1

ARM HYDRAULICS - BCB00501-05, -06 & -07

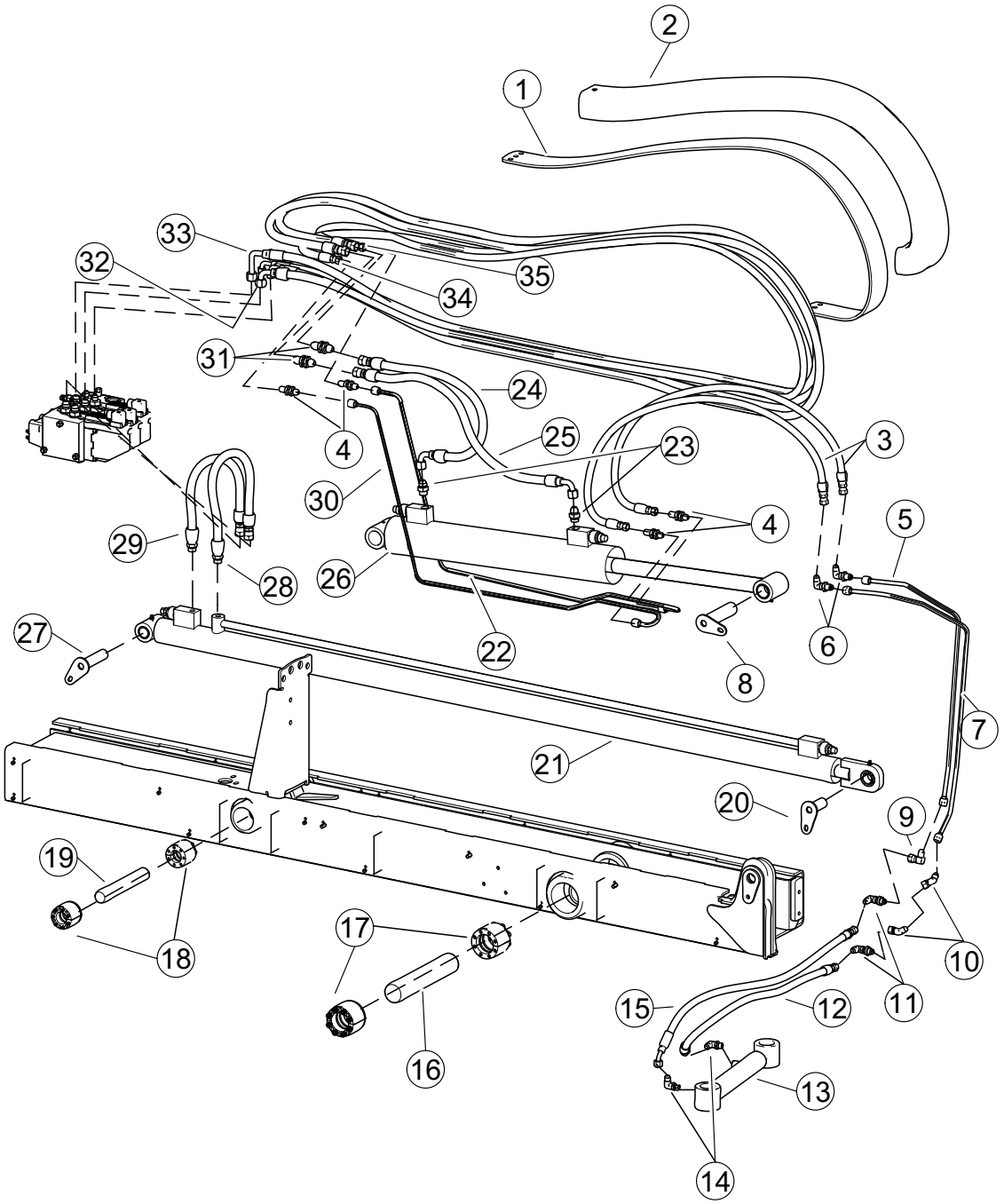

ARM HYDRAULICS - BCB00501-05, -06 & -07

REF. NO.	PART NO.	DESCRIPTION	QTY.
1	155750	REINFORCEMENT	1
2	HYB03780	PROTECTOR	PER INCH
3	67809	HOSE (BCB00501-05)	1
	88235	HOSE (BCB00501-06 & BCB00501-07) ORFS	1
4	HYF06490	BULKHEAD (BCB00501-05)	4
	HYF04892	BULKHEAD (BCB00501-06 & BCB00501-07) ORFS	4
5	81159	TUBE (BCB00501-05)	1
	88260	TUBE (BCB00501-06 & BCB00501-07) ORFS	1
6	HYF06790	BULKHEAD (BCB00501-05)	2
	HYF06791	BULKHEAD (BCB00501-06 & BCB00501-07)ORFS	2
7	81158	TUBE (BCB00501-05)	1
	88259	TUBE (BCB00501-06 & BCB00501-07) ORFS	1
8	64559	PIN	1
9	HYF07950	ELBOW (BCB00501-05)	1
	HYF07415	ELBOW (BCB00501-06 & BCB00501-07) ORFS	1
10	HYF07840	ELBOW (BCB00501-05)	2
	HYF07841	ELBOW (BCB00501-06 & BCB00501-07) ORFS	2
11	HYF06790	ELBOW (BCB00501-05)	2
	HYF06791	ELBOW (BCB00501-06 & BCB00501-07)ORFS	2
12	64557	HOSE (BCB00501-05)	1
	88262	HOSE (BCB00501-06 & BCB00501-07) ORFS	1
13	HYC00166-01	CYLINDER	1
14	HYF07400	ELBOW (BCB00501-05)	2
	HYF07435	ELBOW (BCB00501-06 & BCB00501-07) ORFS	2
15	64560	HOSE (BCB00501-05)	1
	88261	HOSE (BCB00501-06 & BCB00501-07) ORFS	1
16	64507	PIN	1
17	QUB00498	COLLAR, Pin	2
18	QUB00495	COLLAR, Pin	2
19	64504	PIN	1
20	64509	PIN	1
21	HYC00191	CYLINDER	1
22	82214	TUBE (BCB00501-05)	1
	88230	TUBE (BCB00501-06 & BCB00501-07) ORFS	1
23	HYF05110	ADAPTER (BCB00501-05)	2
	HYF05171	ADAPTER (BCB00501-06 & BCB00501-07)ORFS	2
24	26506	HOSE (BCB00501-05)	1
	88232	HOSE (BCB00501-06 & BCB00501-07) ORFS	1
		SEE NEXT PAGE	

ARM HYDRAULICS - BCB00501-05, -06 & -07

REF. NO.	PART NO.	DESCRIPTION	QTY.
25	12546	HOSE (BCB00501-05)	1
	88231	HOSE (BCB00501-06 & BCB00501-07) ORFS	1
26	HYC00356	CYLINDER - 1.25” DIA PINS	1
	HYC00357	CYLINDER - 1.00” DIA PINS (BCB00501-00 and Earlier arms)	1
27	64502	PIN	1
28	64656	HOSE (BCB00501-05)	1
	88241	HOSE (BCB00501-06 & BCB00501-07) ORFS	1
29	64655	HOSE (BCB00501-05)	1
	88240	HOSE (BCB00501-06 & BCB00501-07) ORFS	1
30	82113	TUBE (BCB00501-05)	1
	88229	TUBE (BCB00501-06 & BCB00501-07) ORFS	1
31	HYF06500	BULKHEAD (BCB00501-05)	2
	HYF04891	BULKHEAD (BCB00501-06 & BCB00501-07)	2
32	122919	HOSE (BCB00501-05)	1
	172118	HOSE (BCB00501-06 & BCB00501-07)	1
33	155746	HOSE (BCB00501-05)	1
	172115	HOSE (BCB00501-06 & BCB00501-07)	1
34	155747	HOSE (BCB00501-05)	1
	172116	HOSE (BCB00501-06 & BCB00501-07)	1
35	155747	HOSE (BCB00501-05)	1
	172117	HOSE (BCB00501-06 & BCB00501-07)	1

ARM HYDRAULICS - LONG REACH

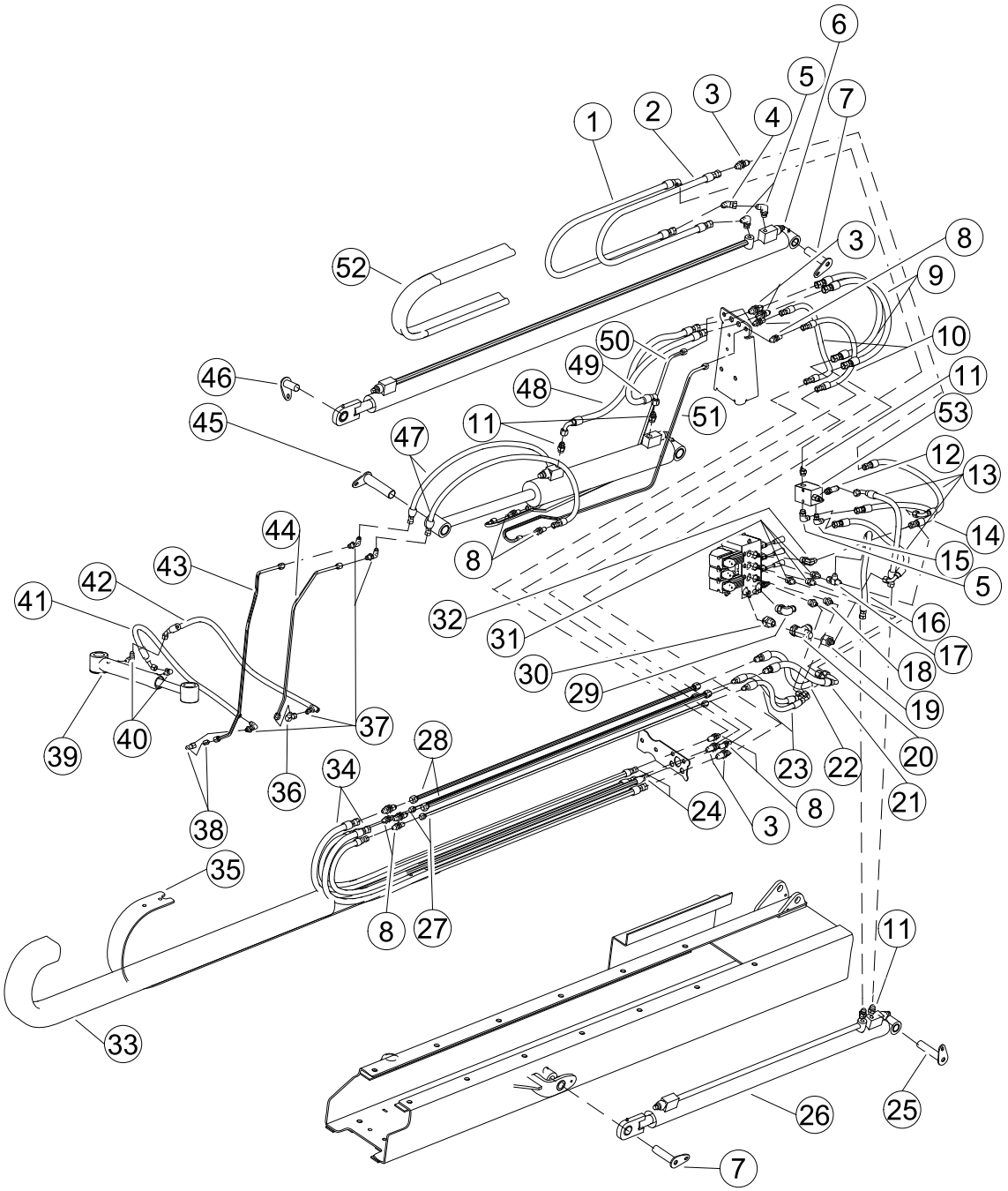

ARM HYDRAULICS - LONG REACH

REF. NO.	PART NO.	DESCRIPTION	QTY.
1	15700	HOSE	1
2	146041	HOSE	1
3	HYF06500	CONNETOR, Bulkhead	7
4	HYF02925	ELBOW	1
5	HYF05125	ELBOW	2
6	HYC00191	CYLINDER	1
7	64502	PIN	2
8	HYF06490	CONNECTOR, Bulkhead	8
9	64659	HOSE	2
10	64660	HOSE	2
11	HYF05110	ADAPTER	5
12	HYF05111	ADAPTER	1
13	49518	HOSE	3
14	16751	HOSE	1
15	HYF05130	ELBOW	1
16	36195	HOSE	1
17	HYF05825	TEE	1
18	HYF04895	ADAPTER	2
19	HYF10020	REDUCER	1
20	HYF28030	TEE	1
21	82614	HOSE	1
22	82616	HOSE	1
23	82615	HOSE	2
24	146045	HOSE	2
25	84810	PIN	1
26	HYC00219	CYLINDER	1
27	146053	TUBE	2
28	146054	TUBE	2
29	HYF05135	TEE	1
30	HYF05113	ADAPTER	1
31	HYF04900	ADAPTER	3
32	HYF07450	ELBOW	1
33	HYB03780	SLEEVE, Nylon (Sold By Inch)	A/R
34	146046	HOSE	2
35	143106	SUPPORT, Hose	1
36	HYF07950	ELBOW	1
37	HYF06790	ELBOW	4
38	HYF07840	ELBOW	2
39	HYC00166-01	CYLINDER	1
40	HYF07400	ELBOW	2
		CONTINUED NEXT PAGE	

ARM HYDRAULICS - LONG REACH

REF. NO.	PART NO.	DESCRIPTION	QTY.
41	64557	HOSE	1
42	64560	HOSE	1
43	81158	TUBE	1
44	81159	TUBE	1
45	64559	PIN	1
46	64508	PIN	1
47	67809	HOSE	2
48	12546	HOSE	1
49	26506	HOSE	1
50	82113	TUBE	1
51	82114	TUBE	1
52	HYB03650	SLEEVE, Nylon (Sold by Inch)	A/R
53	HYV08110	VALVE, Sequence	1

ARM CONTROL VALVE

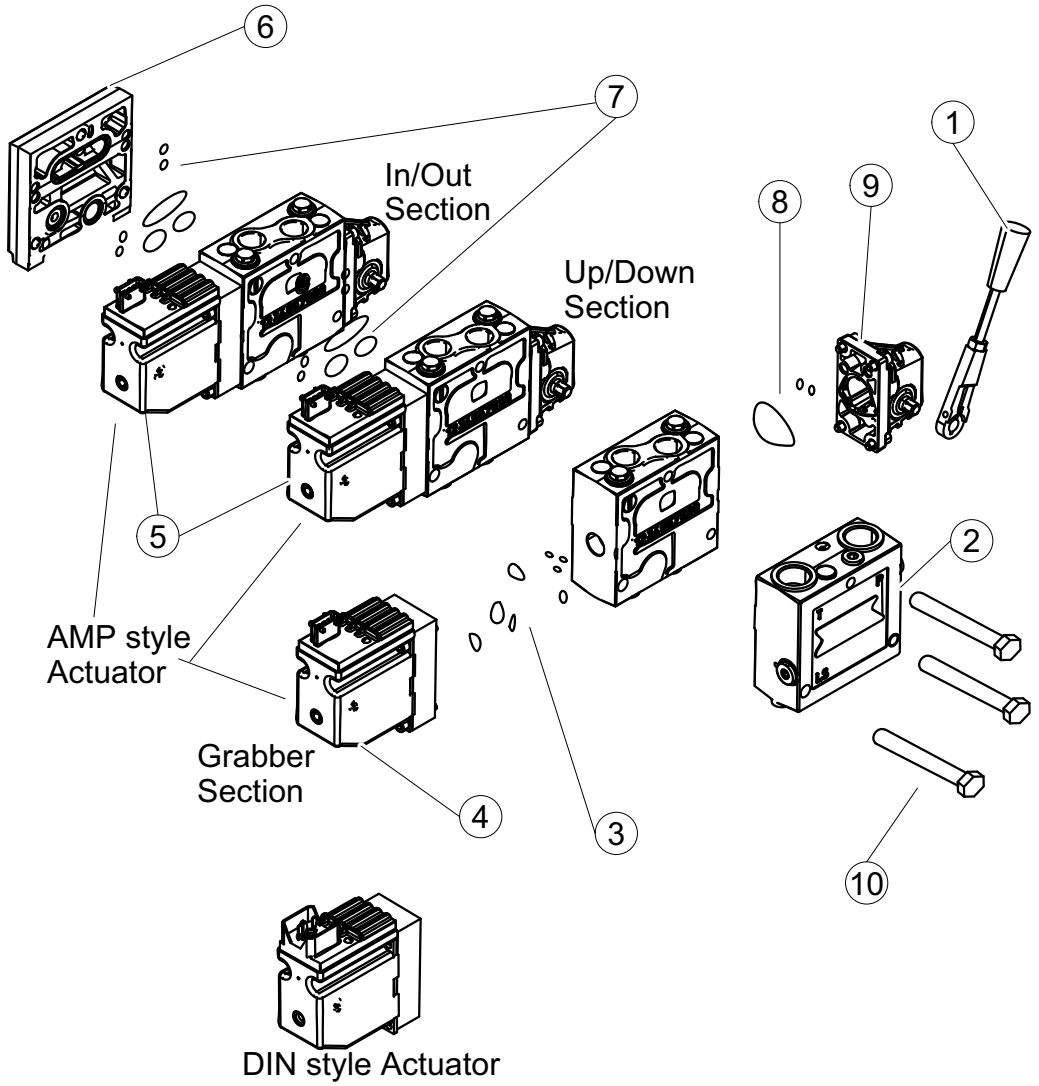

ARM CONTROL VALVE

REF. NO.	PART NO.	DESCRIPTION	QTY.
1	HYV04316	HANDLE	A/R
2	HYV04433	SECTION, Inlet	1
3	HYV04335-01	KIT, Seal, Electric Actuator	A/R
4	HYV04328	ACTUATOR, AMP Style, On/Off, Gripper Section	1
	HYV04320	ACTUATOR, DIN Style, On/Off, Gripper Section	1
	79280	HARNESS, Adapter, AMP to DIN	A/R
5	HYV04327	ACTUATOR, AMP Style, Proportional, In/Out and Up/Down Sections	2
	HYV04321-01	ACTUATOR, DIN Style, Proportional, In/Out and Up/Down Sections	2
	79461	HARNESS, Adapter, AMP to DIN, In/Out	A/R
	79462	HARNESS, Adapter, AMP to DIN, Up/Down	A/R
6	HYV04377	SECTION, End	1
7	HYV04429	KIT, Seal, Between Sections	A/R
8	HYV04330	KIT, Seal, Handle End	A/R
9	HYV04315	ACTUATOR, Includes Items 1 and 8	A/R
	HYV04342	ASSEMBLY, Section, Proportional, AMP Style	A/R
	HYV04407	ASSEMBLY, Valve - Complete - 3 Section	
	HYV04406	ASSEMBLY, Valve - Complete - 4 Section	
	HYV04408	ASSEMBLY, Valve - Complete - 5 Section	

SEQUENCE VALVE - HYV08110

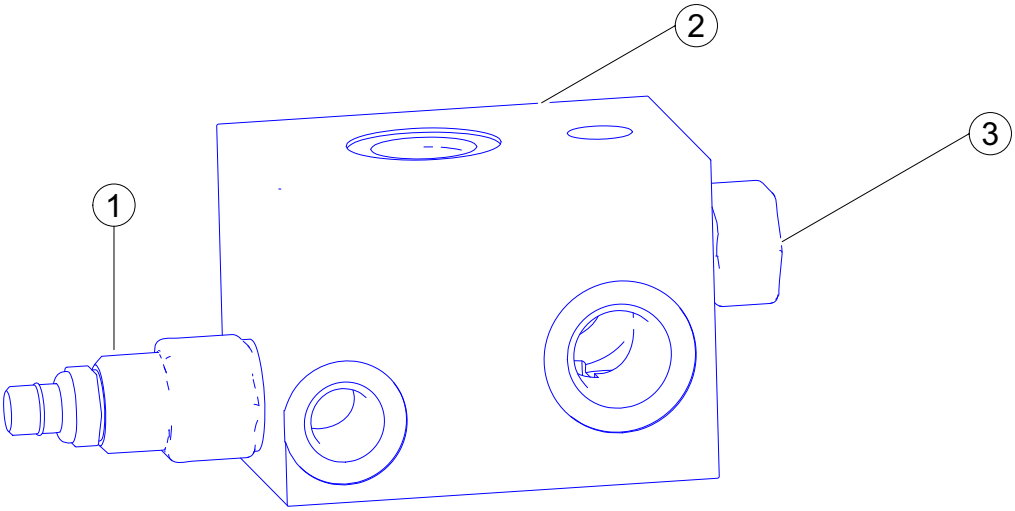

REF. NO.	PART NO.	DESCRIPTION	QTY.
1	HYV08111	ASSEMBLY, Cartridge - Sequential	1
2	HYV08110	ASSEMBLY, Valve - Complete	1
3	HYV08112	ASSEMBLY, Cartridge - Check Valve	1
	HYJ08110	KIT, Seal	1

ELECTRICAL

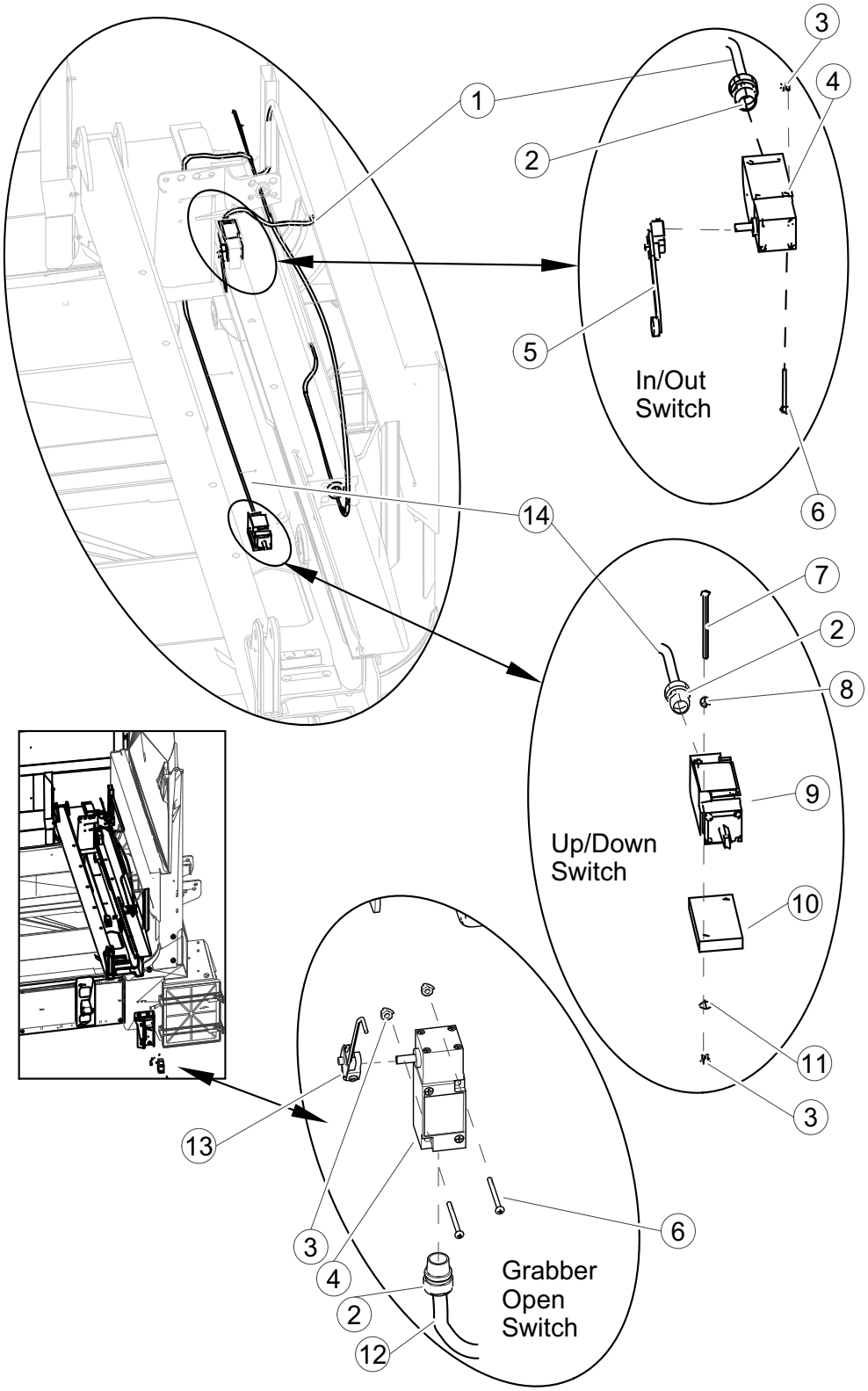
1
2
3
4
5
6
In/Out
Switch
14
7
2
8
9
10
11
3
Up/Down
Switch
13
3
4
2
12
6
Grabber
Open
Switch

REF. NO.	PART NO.	DESCRIPTION	QTY.
1	27584	HARNESS	1
2	ELC00140	CONNECTOR	3
3	QUE01070	NUT	6
4	ELI00550	SWITCH	2
5	ELI00852	ACTUATOR	1
6	QUV01925	BOLT	4
7	QUV01965	BOLT	2
8	QUB47500	SPACER	2
9	ELI00530	SWITCH	1
10	64677	SPACER	1
11	QUR01600	WASHER	2
12	66752	HARNESS	1
13	81718	ACTUATOR	1
14	27744	HARNESS (Use on all Helping Hand arms except BCB00700-01)	1
	94338	HARNESS (Use on arm BCB00700-01)	1

INSIDE EXTENSION CYLINDER - STD. & LONG REACH

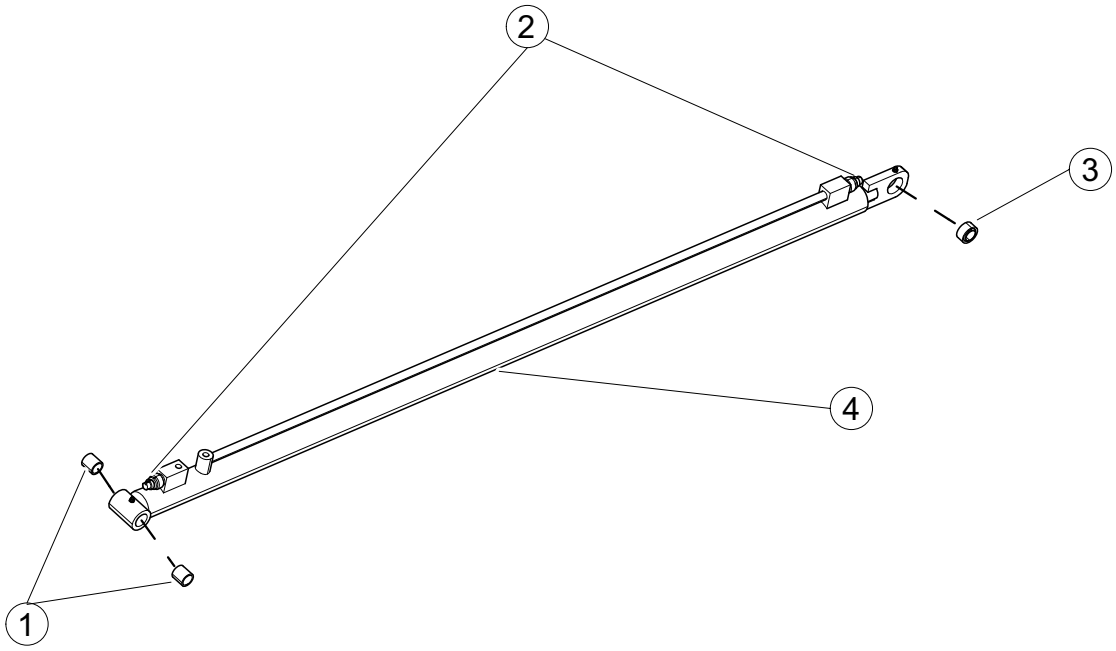

REF. NO.	PART NO.	DESCRIPTION	QTY.
1	HYC08002	BUSHING	2
2	HYC02660	VALVE, Flow Control	2
	HYJ04010	KIT, Seal (Used for Flow Control HYC02660)	
3	HYC08003	BEARING	1
4	HYC00191	ASSEMBLY, Cylinder - Complete	1
	HYJ00191	KIT, Seal	1

OUTSIDE EXTENSION CYLINDER - LONG REACH

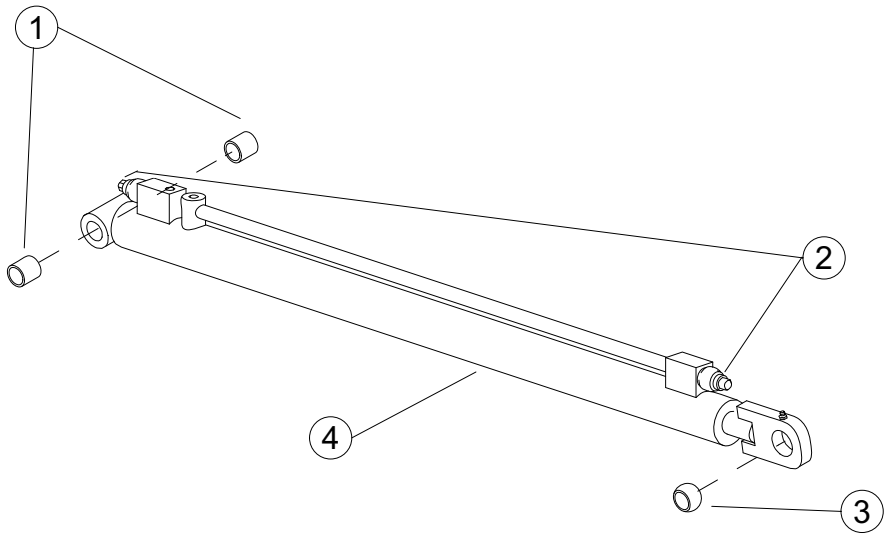

REF. NO.	PART NO.	DESCRIPTION	QTY.
1	HYC08002	BUSHING	2
2	HYC02660	VALVE, Flow Control	2
3	HYC08003	BEARING	1
4	HYC00219	ASSEMBLY, Cylinder	1
	HYJ00191	KIT, Seal	1

ARM LIFT CYLINDER - 1.25” PIN DIA. - HYC00356

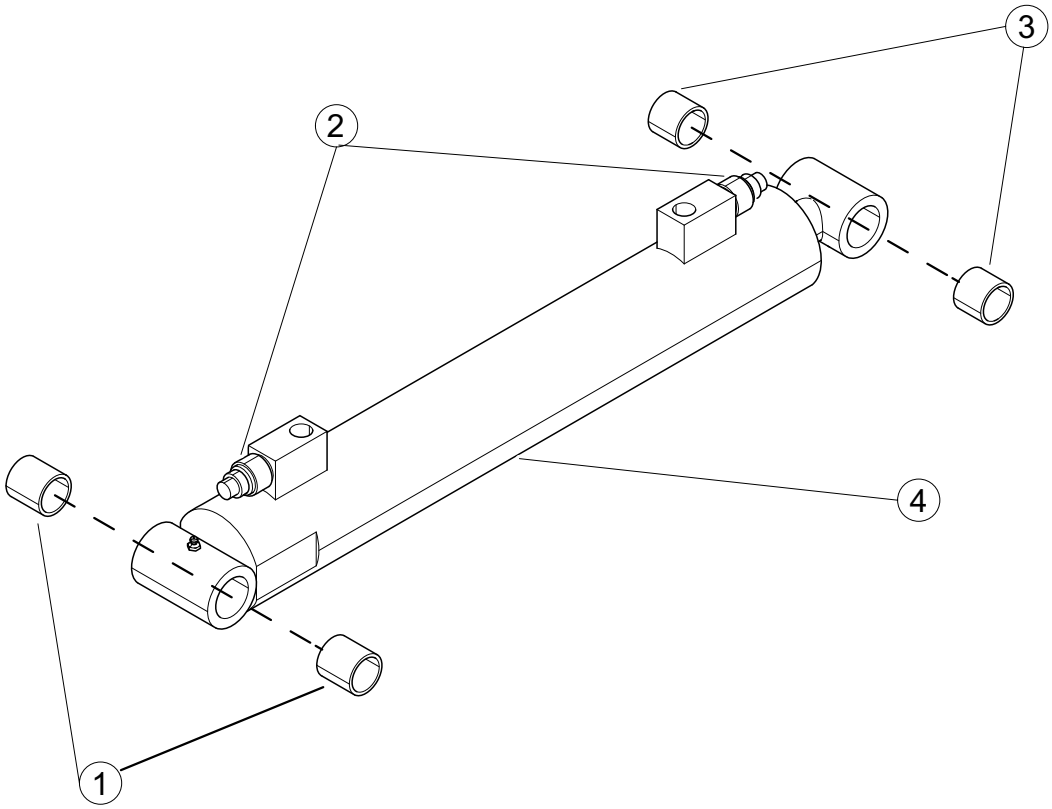

REF. NO.	PART NO.	DESCRIPTION	QTY.
1	HYC08001	BUSHING	2
2	HYC02660	VALVE, Flow Control	2
3	HYC08000	BUSHING	2
4	HYC00356	ASSEMBLY, Cylinder - Complete	1
	HYJ00356	KIT, Seal	1
		NOTE: Older BCB00500 arms had a Cyl. with a 1” dia pin Cylinder = HYC00357	

GRABBER CYLINDER - HYC00166-01

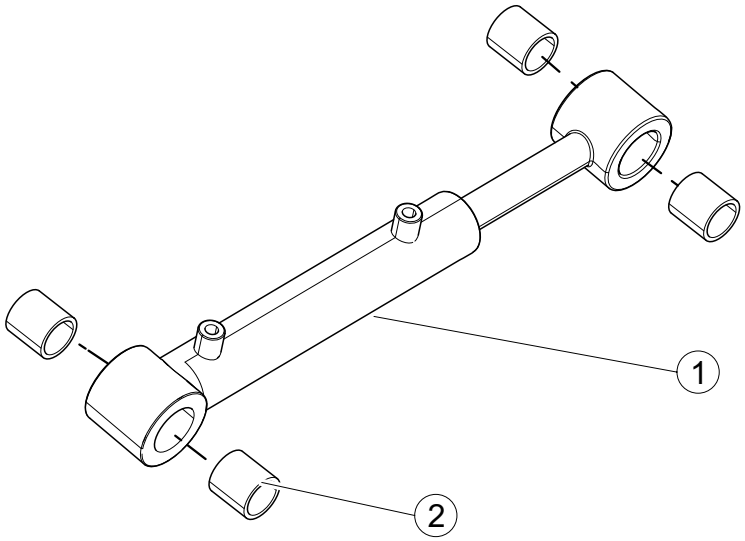

REF. NO.	PART NO.	DESCRIPTION	QTY.
1	HYC00166-01	ASSEMBLY, Cylinder - Complete	1
	HYJ00166	KIT, Seal	1
2	QUB00166	BUSHING	4

GRABBER CYLINDER W/Holding Valve - HYC00235

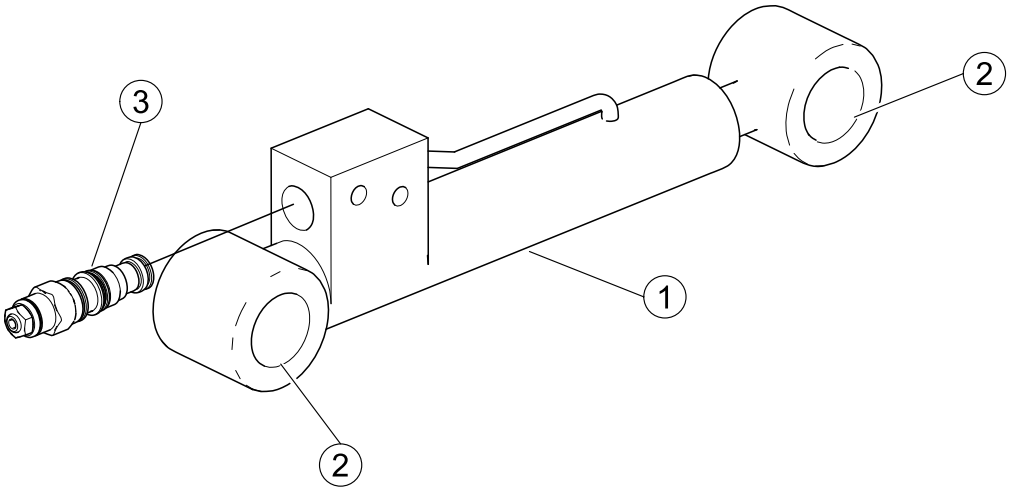

REF. NO.	PART NO.	DESCRIPTION	QTY.
1	HYC00235	ASSY., Cylinder - Complete	1
	HYJ00166	SEAL KIT (Used on Cylinder HYC00235)	1
2	QUB00166	BEARING	4
3	H-V0080	CARTRIDGE, Holding	1

labrie*plus* - USA

1981 W. Snell Road
Oshkosh, WI. 54904

Mailing Address:
P.O. Box 2785
Oshkosh, WI. 54903-2785

Parts, Service and Warranty
(During Business Hours)
7:00 A.M. to 7:00 P.M. Central Standard Time

Technical Support Service (24 Hours)

Toll Free: 1-800-231-2771
Telephone: 1-920-233-2770
General Fax: 1-920-232-2496
Sales Fax: 1-920-232-2498

labrie*plus* - Canada

175 Route du Pont
St-Nicolas, QC G7A 2T3

Mailing Address:
175 Route du Pont
St-Nicolas, QC G7A 2T3

Parts, Service and Warranty
(During Business Hours)
8:00 A.M. to 5:00 P.M. Eastern Standard Time

Technical Support Service (24 Hours)

Toll Free: 1-877-831-8250
Telephone: 1-418-831-8250
Service Fax: 1-418-831-1673
Parts Fax: 1-418-831-7561

Part #90401_R4