IMPAC®

PARTS MANUAL

SERIAL NUMBERS:
BODY: _____
MAST: _____
GRABBER: _____
MFG. DATE: _____

Made In U.S.A.

0600-002-7-2001

IMPAC

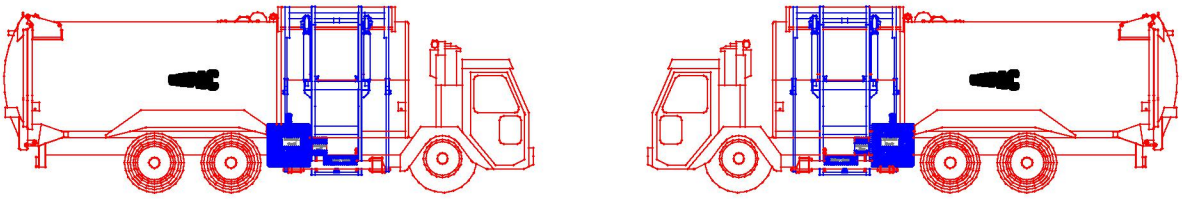

IF YOU HAVE ANY QUESTIONS OR PROBLEMS CONTACT IMPAC AT 1-866-464-6722 (1-866-GO IMPAC)

WARRANTY

There must be in the file of Pendpac within ten (10) days after delivery of an Impac Unit (The "Product"), a valid warranty registration card which the customer should fill out immediatly after the "Product" is sold. The warranty card is enclosed in the Parts Manual. Pendpac will not be obligated to warranty the unit unless this registration is on file.

Pendpac warrants the "Product" sold to be free from defects in material and workmanship under normal use and service for six (6) months after the date of delivery to the initial user, subject to the following provisions:

I. This warranty is limited to the repair or replacement of parts such as shall appear to an IMPAC representative upon inspection to have been defective in material or workmanship. A Warranty Authorization number must be issued by a Pendpac representative before warranty work is to proceed. (Failure to get authorization may result in non-reimbursement.) There must be a warranty claim form (supplied by Pendpac) properly filled out and mailed to Pendpac within thirty (30) days of the date of failure. Parts needing to be returned must have a return authorization number and must be returned to Pendpac within thirty (30) days for inspection before credit can be given. Warranty parts shall be shipped to the factory pre-paid motor freight or standard U.P.S. Warranty parts will be shipped from the factory motor freight or standard U.P.S.

II. Warranty with respect to optional equipment is subject to warranty by their respective manufacturer. Such warranties shall be handled direct through the respective manufacturer or their distributor.

This warranty is in lieu of and excludes all other representations or warranties expressed or implied and does not apply where alterations or structural repair has been made to the "Product" without written authorization by a Pendpac representative. Pendpac's obligation under this warranty does not apply in case of any alterations, accidents, misuse, abuse, neglect, or if maintained or operated in other manner than recommended or approved in the IMPAC Owners Manual.

THERE IS NO WARRANTY OF MERCHANTABILITY OR FITNESS FOR ANY PARTICULAR PURPOSE NOR IS THERE ANY OTHER WARRANTY, EXPRESS OR IMPLIED, EXCEPT AS SPECIFICALLY STATED HERIN. PENDPAC SHALL IN NO EVENT BE LIABLE FOR ANY SPECIAL, INDIRECT, OR CONSEQUENTIAL DAMAGES OR CLAIMS OF ANY THIRD PARTY AGAINST CUSTOMER.

IMPROVEMENTS

Pendpac reserves the right to make changes in design and improvements whenever it is believed the efficiency of the products will be improved, but without incurring any obligation to incorporate such improvements in any product which has been shipped or is in service.

IMPAC®

WARRANTY REGISTRATION FORM

NOTE: COMPLETE AND RETURN WITHIN TEN (10) DAYS OF DELIVERY TO VALIDATE WARRANTY.

DEALER: _____

ADDRESS: _____

_____

_____

PURCHASER: _____

ADDRESS: _____

_____

_____

UNIT DESCRIPTION: _____

_____

BODY MODEL NO. : _____

BODY SERIAL NO. : _____

MAST MODEL NO. : _____

MAST SERIAL NO. : _____

GRABBER MODEL NO. : _____

GRABBER SERIAL NO. : _____

DATE PURCHASED: _____

CHASSIS VIN NO. : _____

Mail to:

Pendpac
1700 N. Main
Fairview, OK 73737-2722

CUT LINE

TO OUR CUSTOMERS

This manual provides you with the necessary information for the proper parts ordering for your Impac unit plus basic options.

If special schematics are required for the option ordered, they will be inserted in the option section as "special options".

Any questions or problems concerning the electrical or hydraulic schematic should be discussed with Pendpac's service department before changing or modifying.

IMPORTANT

The data and information listed herin is correct to the best of our knowledge and belief. Having been compiled from reliable and official information. However, we cannot assume any responsibility for possible error.

TABLE OF CONTENTS

WARRANTY	PAGE I
WARRANTY REGISTRATION FORM	PAGE II
"TO OUR CUSTOMERS"	PAGE III
TABLE OF CONTENTS	PAGE IV
PARTS	SECTION 1
HYDRAULICS	SECTION 2
ELECTRICAL	SECTION 3
AIR	SECTION 4
OPTIONS	SECTION 5

SECTION 1
PARTS

CAUTION	1-1
ENDGATE	1-2
ACCESS DOOR	1-3
MOUNTING BRACKETS	1-4
UNDER CARRIAGE	1-5
MAST	1-6, 1-8
TRUXMORE MAST	1-9, 1-11
PACKER	1-12
DECALS	1-13
ARMS	1-14

CAUTION

Unauthorized substitution of parts may affect the performance of this Impac unit possibly resulting in malfunction and leading to damage to equipment or injury to personnel. Only approved replacement parts should be used in the repair of this unit.

Pendpac conducts a continuing program of product improvement that can result in changes or additions of parts. We also maintain multiple sources for many of the parts and components we purchase. When ordering replacement parts, specify the serial and model numbers of the unit being repaired so we can assure that the proper part is sent.

END GATE

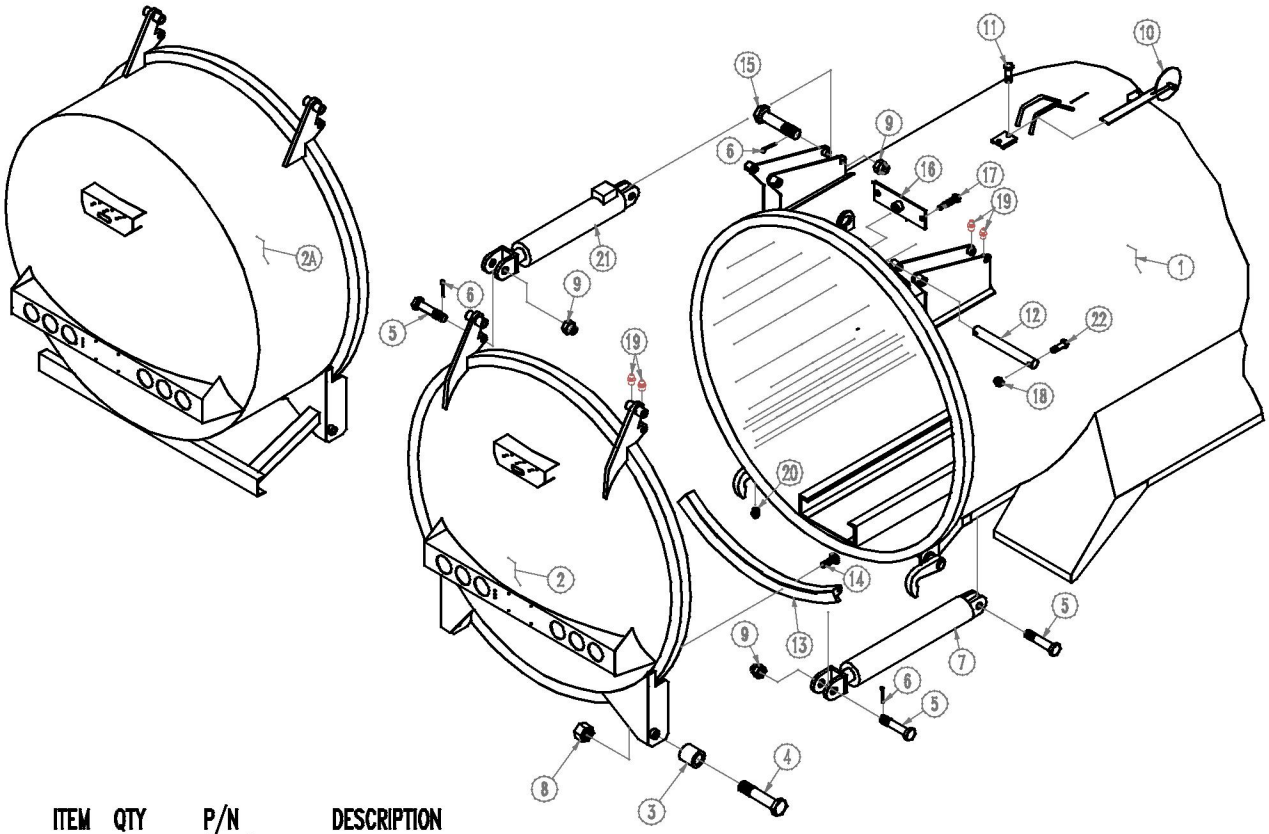

ITEM	QTY	P/N	DESCRIPTION
1	1	(REF.)	TANK STRUCTURE
2	1	0601-003	STANDARD TAIL GATE STRUCTURE
2A	1	0601-011	BUBBLE TAIL GATE STRUCTURE
3	2	0604-059	BUSHING
4	2	0064-917	CAPSCREW, 1.25-8NC X 6.50
5	4	0602-795	DRILLED CAPSCREW
6	10	0040-504	COTTER PIN, .19 X 1.50
7	1	0020-112	HYDRAULIC CYLINDER
8	2	0065-282	HEX NUT, 1.25-8NC NYLOCK
9	6	0065-763	HEX NUT, 1.00-14NF SLOTTED
10	1	0600-661	UPPER LIMITING WHEEL STRUCTURE
11	2	0060-388	CAPSCREW, .38-16NC X 1.00
12	2	0604-393	PIN
13	1	0604-207	NEOPRENE "P" STRIP, MCL X 100.00
14	16	0064-905	CAPSCREW, .38-16NC X .75 BUTTON HEAD SOCKET
15	2	0604-382	DRILLED CAPSCREW
16	2	0604-401	COUPLER STRUCTURE
17	4	0064-224	SELF TAPPING SCREW, .38-16NC X 1.00
18	4	0065-180	HEX NUT, .38-16NC NYLOCK
19	8	0041-107	LUBE FITTING, .31 DRIVE
20	4	0041-005	LUBE FITTING, .13 STRAIGHT
21	2	0020-150	HYDRAULIC CYLINDER
22	4	0060-445	CAPSCREW, .38-16NC X 2.50

ACCESS DOOR

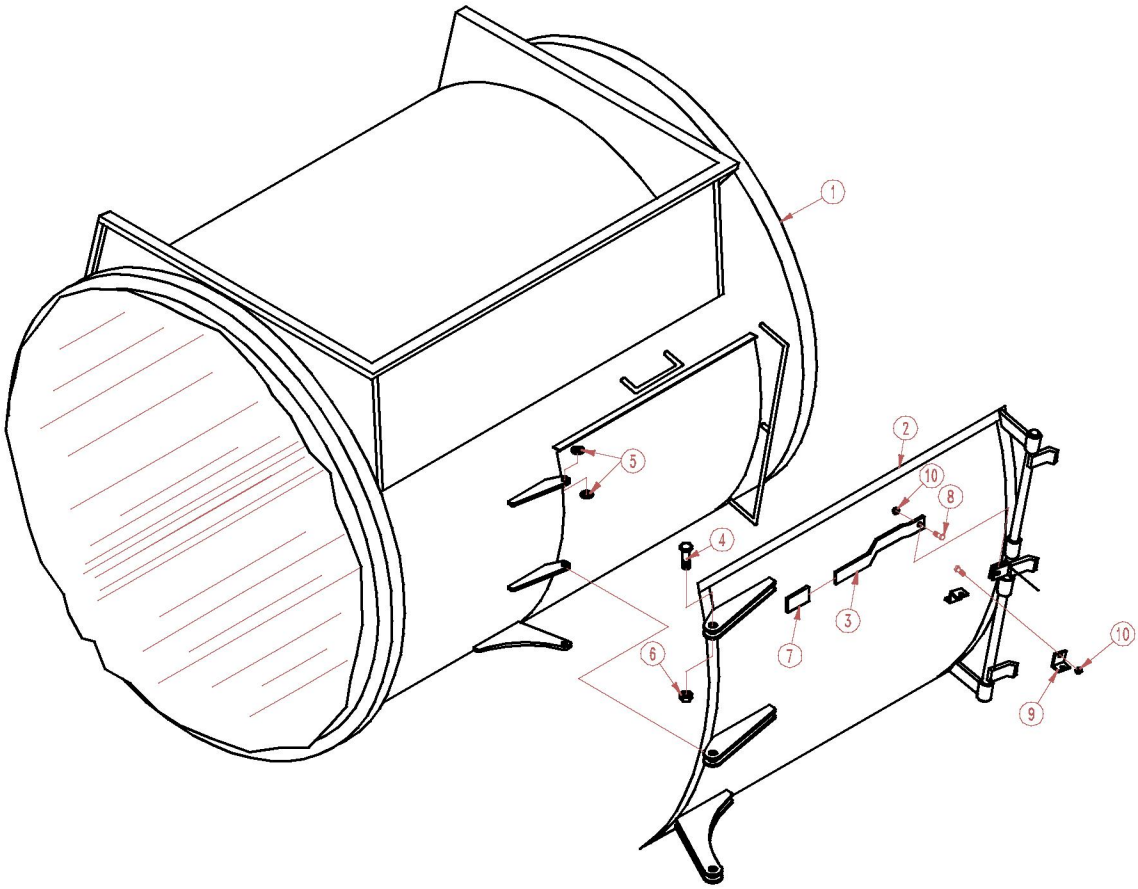

ITEM	QTY	P/N	DESCRIPTION
1	1	(REF.)	TANK STRUCTURE
2	1	0601-613	R.H. ACCESS DOOR STRUCTURE
3	1	0601-231	FORMED FLAT
4	3	0061-419	CAPSCREW, .75-10NC X 2.50
5	6	0066-089	.75 FLATWASHER
6	3	0065-233	HEX NUT, .75-10NC NYLOCK
7	1	0044-082	2" VINYL HANDLE GRIP
8	1	0060-388	CAPSCREW, .38-16NC X 1.00
9	1	0601-822	FORMED FLAT
10	2	0065-032	HEX NUT, .38-16NC

MOUNTING BRACKETS

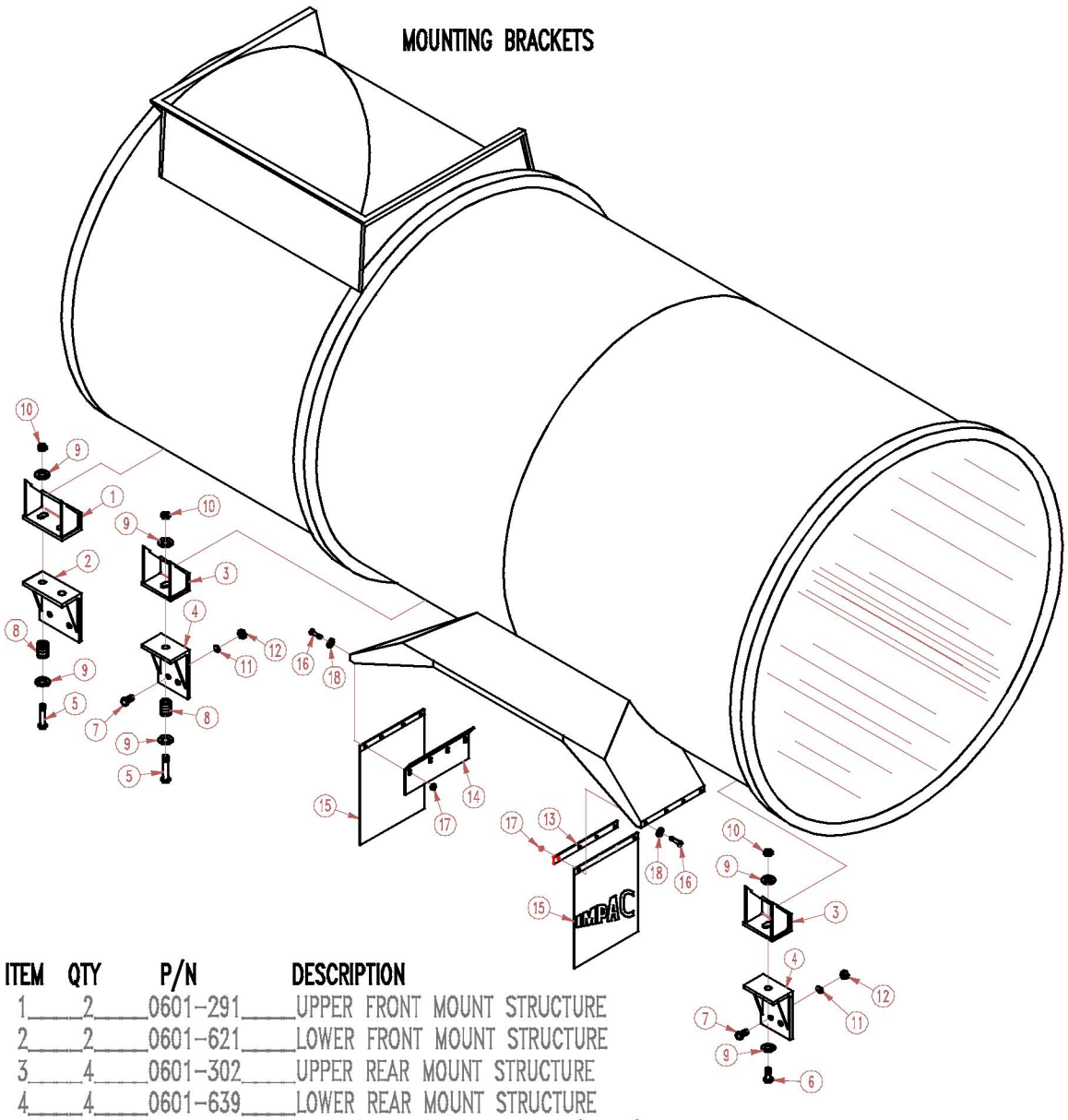

ITEM	QTY	P/N	DESCRIPTION
1	2	0601-291	UPPER FRONT MOUNT STRUCTURE
2	2	0601-621	LOWER FRONT MOUNT STRUCTURE
3	4	0601-302	UPPER REAR MOUNT STRUCTURE
4	4	0601-639	LOWER REAR MOUNT STRUCTURE
5	6	0064-273	CAPSCREW, .88-9NC X 7.00 (GR. 8)
6	2	0064-284	CAPSCREW, .88-9NC X 3.50 (GR. 8)
7	24	0061-158	CAPSCREW, .63-11NC X 2.00
8	6	0044-127	SPRING
9	16	0066-090	.88 FLATWASHER
10	8	0065-247	HEX NUT, .88-9NC NYLOCK
11	24	0067-072	.63 LOCKWASHER
12	24	0065-070	HEX NUT, .63-11NC
13	2	0244-031	MUD FLAP STRAP
14	2	0602-703	MUD FLAP SUPPORT
15	4	0605-148	IMPAC MUD FLAP
16	20	0060-047	CAPSCREW, .25-20NC X 1.25
17	20	0065-312	HEX NUT, .25-20NC WHIZ
18	20	0066-014	.25 FLATWASHER

UNDER CARRIAGE

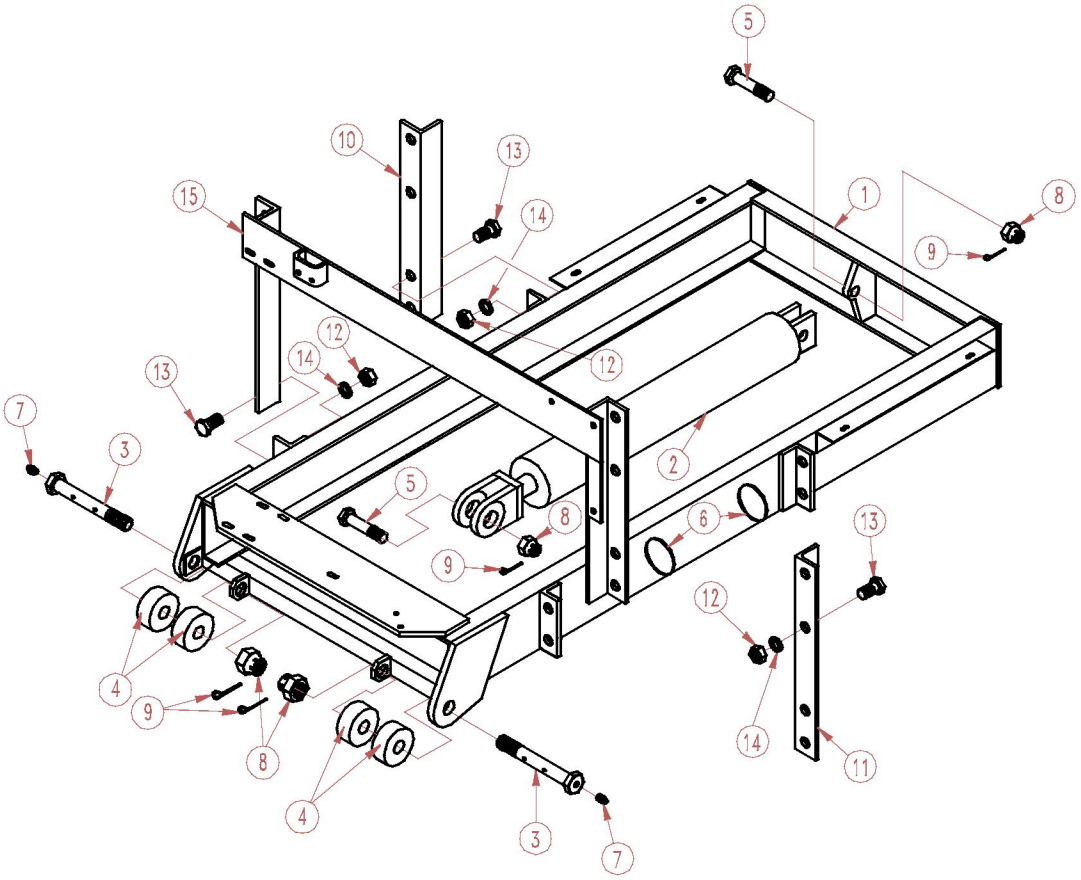

ITEM	QTY	P/N	DESCRIPTION
1	1	0603-425	UNDER CARRIAGE STRUCTURE
2	1	0020-120	HYDRAULIC CYLINDER (30")
2A	1	0020-138	HYDRAULIC CYLINDER (48")(NOT SHOWN)
3	2	0602-765	MODIFIED CAPSCREW
4	4	0044-525	3" CAM FOLLOWER (YOKE TYPE)
5	2	0602-795	DRILLED CAPSCREW
6	2	0607-142	FORMED ROUND
7	2	0041-032	LUBE FITTING, .25-28NF
8	4	0065-763	HEX NUT, 1.0-14NF SLOTTED
9	4	0040-512	COTTER PIN, .19 X 2.00
10	1	0604-041	L.H. ANGLE
11	1	0604-042	R.H. ANGLE
12	16	0065-088	HEX NUT, .75-10NC
13	16	0061-390	CAPSCREW, .75-10NC X 2.00
14	16	0067-080	.75 LOCKWASHER
15	1	0603-420	MOUNT STRUCTURE

MAST

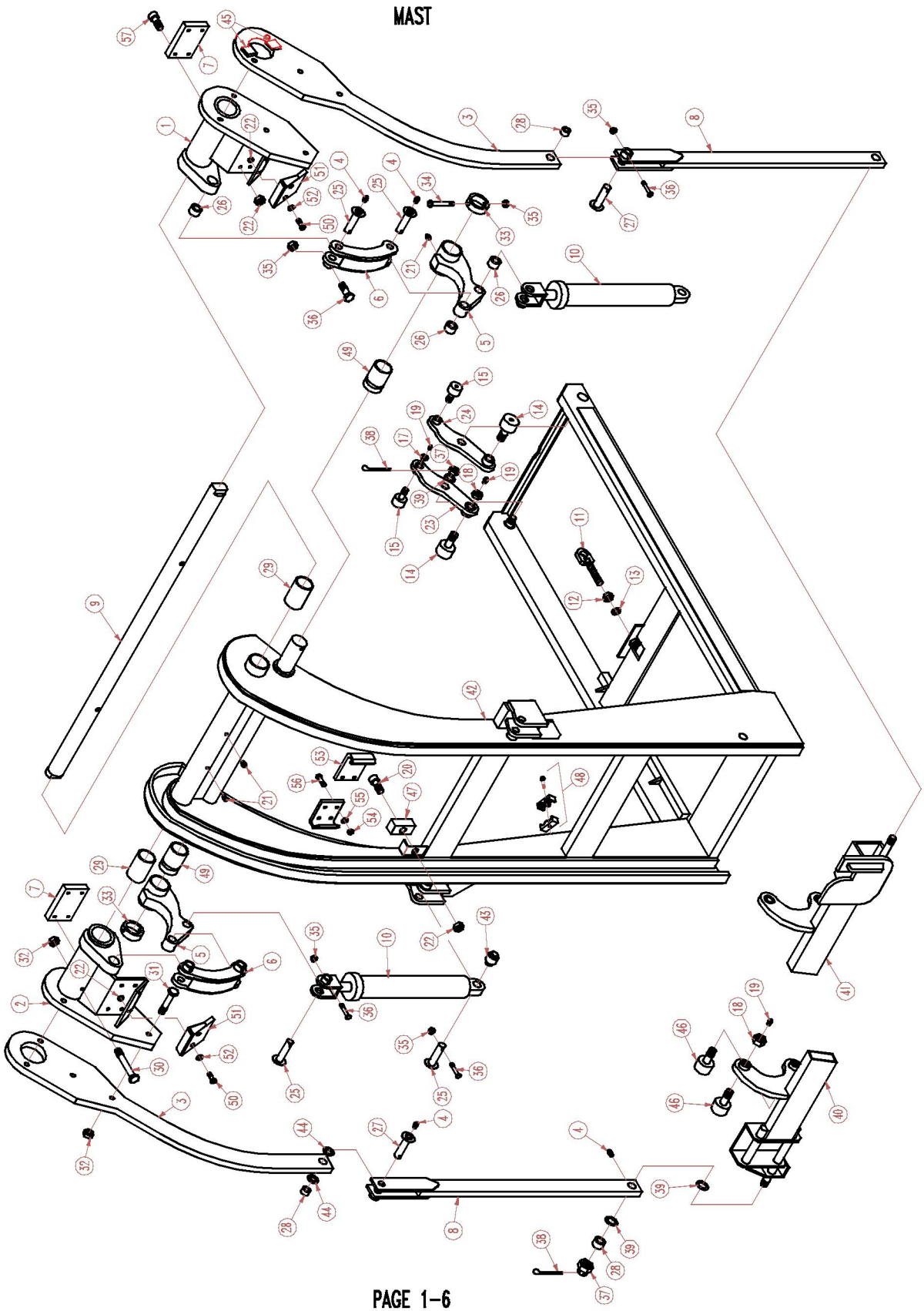

ITEM	QTY	P/N	DESCRIPTION
1	1	0603-706	R.H. SIDE PLATE STRUCTURE
2	1	0603-714	L.H. SIDE PLATE STRUCTURE
3	2	(REF.)	UPPER ARM
4	4	0041-032	LUBE FITTING, .25-28NF
5	2	0603-774	LOWER LINK STRUCTURE
6	2	0603-804	UPPER LINK STRUCTURE
7	2	0604-326	SPACER BLOCK
8	2	(REF.)	LOWER ARM STRUCTURE
9	1	0603-986	CROSS SHAFT
10	2	0020-077	HYDRAULIC CYLINDER
11	1	0604-151	EAR STRUCTURE
12	1	0065-107	HEX NUT, 1.0-8NC
13	1	0067-109	1.0 LOCKWASHER
14	2	0044-517	CAM FOLLOWER
15	2	0044-509	CAM FOLLOWER
16	2	0041-099	LUBE FITTING, .19 DRIVE
17	2	0065-956	HEX JAM NUT, .88-14NF
18	6	0065-964	HEX JAM NUT, 1.25-12NF
19	6	0041-123	LUBE FITTING, .25 DRIVE
20	2	0064-232	CAPSCREW, .50-13NC X 1.50 SOCKET HEAD
21	4	0041-134	LUBE FITTING, .13-27NPT
22	14	0065-209	HEX NUT, .50-13NC NYLOCK
23	1	0603-511	L.H. EAR STRUCTURE
24	1	0603-516	R.H. EAR STRUCTURE
25	8	0603-849	PIN STRUCTURE
26	6	0044-305	BRONZE BUSHING
27	2	0603-213	PIN STRUCTURE
28	4	0605-035	BRONZE BUSHING
29	2	0603-975	BRONZE BUSHING
30	2	0061-499	CAPSCREW, .75-10NC X 5.00
31	8	0061-435	CAPSCREW, .75-10NC X 3.00
32	10	0065-532	HEX NUT, .75-10NC UNI-TORQUE
33	2	0603-865	BUSHING
34	2	0060-517	CAPSCREW, .38-16NC X 4.50
35	12	0065-180	HEX NUT, .38-16NC NYLOCK

(CONT.)

MAST (CONT.)

ITEM	QTY	P/N	DESCRIPTION
36	10	0060-445	CAPSCREW, .38-16NC X 2.50
37	4	0065-918	HEX NUT, 1.13-12NF SLOTTED
38	4	0040-518	COTTER PIN, .25 X 2.00
39	6	0041-290	MACHINE BUSHING
40	1	0603-554	LIFT STRUCTURE
41	1	0604-495	LIFT STRUCTURE (PAK-MOR STYLE ONLY)
42	1	(REF.)	MAST STRUCTURE
43	2	0600-142	MODIFIED BEARING
44	4	0041-483	MACHINE BUSHING
45	4	0604-177	FLAT, MCL .75 X 1.50 CD 1018 X 2.50
46	4	0603-054	MODIFIED CAM FOLLOWER
47	2	0602-249	WEAR PAD
48	2	0045-238	DOUBLE HOSE CLAMP
49	2	0603-976	BRONZE BUSHING
50	4	0064-531	CAPSCREW, .50-13NC X 2.00 SOCKET HEAD (PAK-MOR STYLE ONLY)
51	2	0604-327	PAK-MOR PAD STRUCTURE (PAK-MOR STYLE ONLY)
52	4	0041-476	MACHINE BUSHING (PAK-MOR STYLE ONLY)
53	2	0604-427	MAST GUIDE
54	8	0065-054	HEX NUT, .50-13NC
55	8	0067-056	.50 LOCKWASHER
56	8	0060-770	CARRIAGE BOLT, .50-13NC X 1.50
57	8	0064-531	CAPSCREW, .50-13NC X 2.00 SOCKET HEAD

TRUXMORE MAST

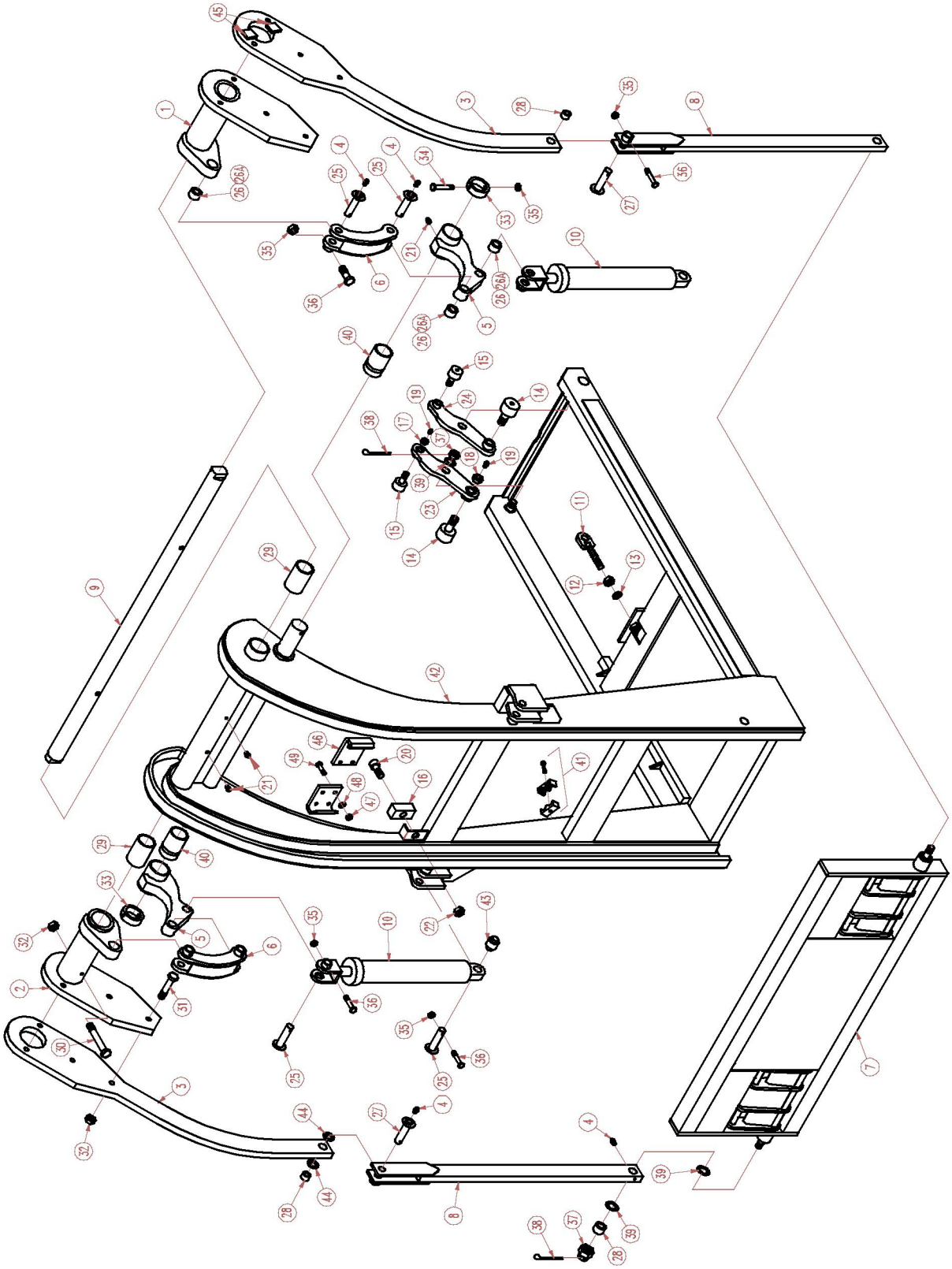

TRUXMORE MAST

ITEM	QTY	P/N	DESCRIPTION
1	1	0603-707	R.H. SIDE PLATE STRUCTURE (TRUXMORE)
2	1	0603-715	L.H. SIDE PLATE STRUCTURE (TRUXMORE)
3	2	(REF.)	UPPER ARM
4	4	0041-032	LUBE FITTING, .25-28NF
5	2	0603-774	LOWER LINK STRUCTURE
6	2	0603-804	UPPER LINK STRUCTURE
7	1	0607-974	TRUXMORE ASSEMBLY
8	2	(REF.)	LOWER ARM STRUCTURE
9	1	0603-987	CROSS SHAFT (TRUXMORE)
10	2	0020-077	HYDRAULIC CYLINDER
11	1	0604-151	EAR STRUCTURE
12	1	0065-107	HEX NUT, 1.0-8NC
13	1	0067-109	1.0 LOCKWASHER
14	2	0044-517	CAM FOLLOWER
15	2	0044-509	CAM FOLLOWER
16	2	0602-249	WEAR PAD
17	2	0065-956	HEX JAM NUT, .88-14NF
18	2	0065-964	HEX JAM NUT, 1.25-12NF
19	2	0041-123	LUBE FITTING, .25 DRIVE
20	2	0064-232	CAPSCREW, .50-13NC X 1.50 SOCKET HEAD
21	4	0041-134	LUBE FITTING, .13-27NPT
22	2	0065-209	HEX NUT, .50-13NC NYLOCK
23	1	0603-511	L.H. EAR STRUCTURE
24	1	0603-516	R.H. EAR STRUCTURE
25	8	0603-849	PIN STRUCTURE
26	6	0605-027	BRONZE BUSHING (S.N. 940037 TO 950109)
26A	6	0044-305	BRONZE BUSHING (S.N. 950110 TO _____)
27	2	0603-213	PIN STRUCTURE
28	4	0605-035	BRONZE BUSHING
29	2	0603-975	BRONZE BUSHING
30	2	0061-499	CAPSCREW, .75-10NC X 5.00
31	8	0061-435	CAPSCREW, .75-10NC X 3.00
32	10	0065-532	HEX NUT, .75-10NC UNI-TORQUE
33	2	0603-865	BUSHING
34	2	0060-517	CAPSCREW, .38-16NC X 4.50
35	12	0065-180	HEX NUT, .38-16NC NYLOCK

(CONT.)

TRUXMORE MAST (CONT.)

ITEM	QTY	P/N	DESCRIPTION
36	10	0060-445	CAPSCREW, .38-16NC X 2.50
37	4	0065-918	HEX NUT, 1.13-12NF CASTLE
38	4	0040-518	COTTER PIN, .25 X 2.00
39	6	0041-290	MACHINE BUSHING
40	2	0603-976	BRONZE BUSHING
41	2	0045-238	DOUBLE HOSE CLAMP
42	1	(REF.)	MAST STRUCTURE
43	2	0600-142	MODIFIED BEARING
44	4	0041-483	MACHINE BUSHING
45	4	0604-177	TIMING BLOCK
46	2	0604-427	MAST GUIDE
47	8	0065-054	HEX NUT, .50-13NC
48	8	0067-056	.50 LOCKWASHER
49	8	0060-770	CARRIAGE BOLT, .50-13NC X 1.50

PACKER

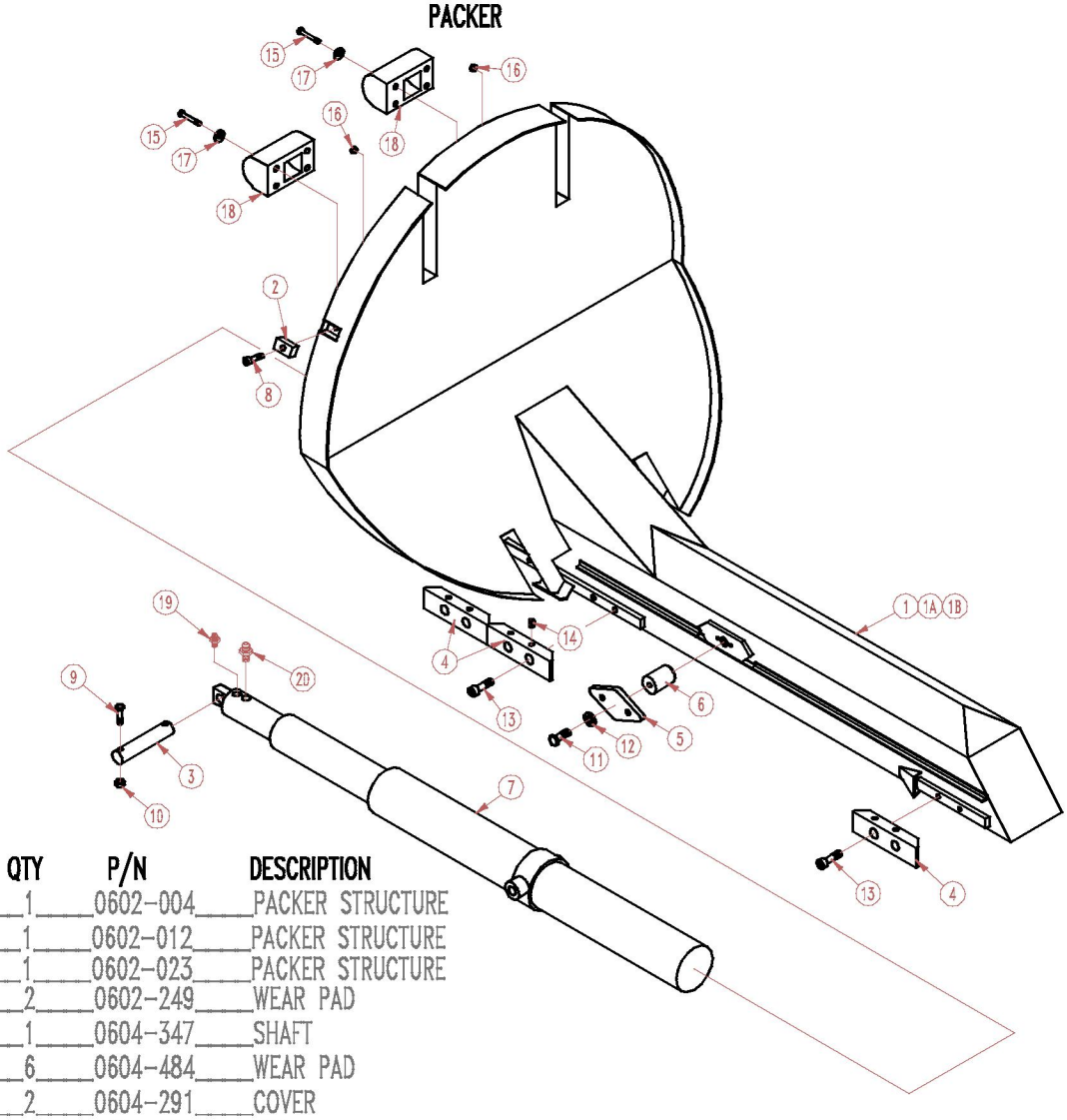

ITEM	QTY	P/N	DESCRIPTION
1	1	0602-004	PACKER STRUCTURE
1A	1	0602-012	PACKER STRUCTURE
1B	1	0602-023	PACKER STRUCTURE
2	2	0602-249	WEAR PAD
3	1	0604-347	SHAFT
4	6	0604-484	WEAR PAD
5	2	0604-291	COVER
6	2	0601-696	PIN
7	1	(REF.)	HYDRAULIC CYLINDER
8	2	0064-232	CAPSCREW, .50-13NC X 1.50 SOCKET HEAD
9	2	0060-426	CAPSCREW, .38-16NC X 2.00
10	2	0065-180	HEX NUT, .38-16NC NYLOCK
11	4	0060-388	CAPSCREW, .38-16NC X 1.00
12	4	0067-034	.38 LOCKWASHER
13	12	0064-246	CAPSCREW, .75-10NC X 1.50 SOCKETHEAD
14	12	0064-633	SETSCREW, .38-16NC X 1.00 (INTERNAL HEX)
15	8	0060-828	CAPSCREW, .50-13NC X 3.00
16	8	0065-209	HEX NUT, .50-13NC (NYLOCK)
17	8	0066-055	.50 FLATWASHER
18	2	0044-201	RUBBER BUMPER
19	1	0033-574	ADAPTER
20	1	0033-642	ADAPTER

DECALS

ITEM	QTY	P/N	DESCRIPTION	LOCATION
1	2	0605-758	PINCH POINT	1-EACH SIDE, REAR OF TANK
1	1	0605-766	ENTER BODY	LEFT OF ACCESS DOOR
3	1	0605-774	STAND CLEAR PACKER	BELOW ITEM #2
4	1	0605-782	CLOSE ACCESS DOOR	BELOW ITEM #3
5	2	0605-793	STAND CLEAR TAILGATE	BELOW ITEM #1
6	1	0605-801	PRECAUTIONS	DASH (INSIDE CAB)
7	1	0605-819	LIFT CAPACITY	CENTER OF MAST
7A	1	0605-911	LIFT CAPACITY	CENTER OF MAST (GRABBER OPTION)
8	1	0605-827	STAND CLEAR MAST	FRONT OF TANK (MAST SIDE)
9	1	0605-838	STAND CLEAR CONTAINER	ABOVE ITEM #8
10	2	0605-849	NOTICE	ABOVE DUMPSTER LIFT POINTS
11	1	0605-850	KEEP OFF	BEHIND LADDER (LADDER & CATWALK OPTION)
12	1	0605-851	WATCH YOUR STEP	BEHIND LADDER (LADDER & CATWALK OPTION)

ARMS

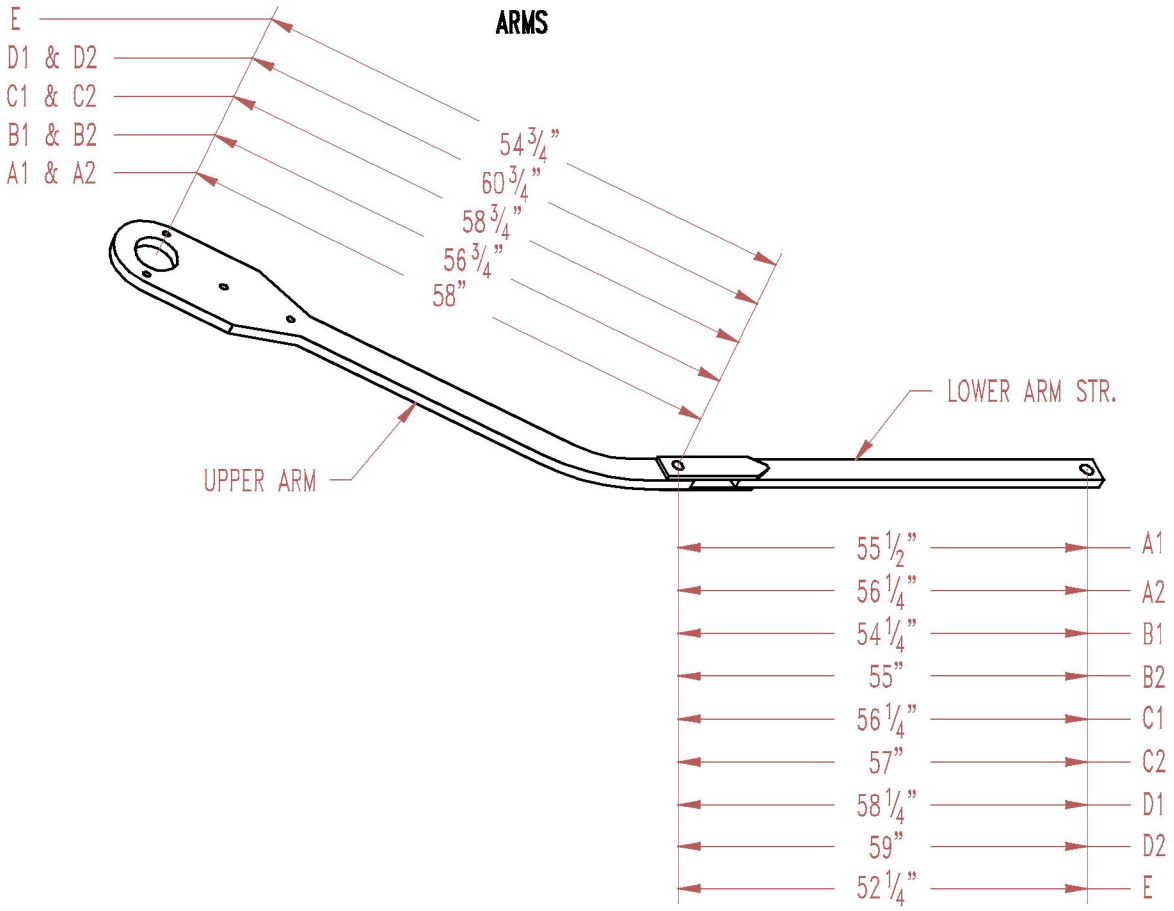

OPTION	QTY	P/N	DESCRIPTION	
A1	2	0603-683	UPPER ARM	THIS OPTION DESIGNED FOR "EMCO" ASSY.
	2	0603-634	LOWER ARM STR.,	
A2	2	0603-683	UPPER ARM	THIS OPTION DESIGNED FOR "PAK-MOR" ASSY.
	2	0603-648	LOWER ARM STR.,	
B1	2	0603-690	UPPER ARM	THIS OPTION DESIGNED FOR "EMCO" ASSY.
	2	0603-640	LOWER ARM STR.,	
B2	2	0603-690	UPPER ARM	THIS OPTION DESIGNED FOR "PAK-MOR" ASSY.
	2	0603-642	LOWER ARM STR.,	
C1	2	0603-694	UPPER ARM	THIS OPTION DESIGNED FOR "EMCO" ASSY.
	2	0603-648	LOWER ARM STR.,	
C2	2	0603-694	UPPER ARM	THIS OPTION DESIGNED FOR "PAK-MOR" ASSY.
	2	0603-604	LOWER ARM STR.,	
D1	2	0603-697	UPPER ARM	THIS OPTION DESIGNED FOR "EMCO" ASSY.
	2	0603-649	LOWER ARM STR.,	
D2	2	0603-697	UPPER ARM	THIS OPTION DESIGNED FOR "PAK-MOR" ASSY.
	2	0603-602	LOWER ARM STR.,	
E	2	0603-691	UPPER ARM	THIS OPTION DESIGNED FOR "EMCO" ASSY.
	2	0603-641	LOWER ARM STR.,	

SECTION 2
HYDRAULICS

DRIVE LINE	2-1
CONTROL VALVE	2-2
HYDRAULIC TANK	2-3, 2-4
HYDRAULIC SYSTEM	2-5, 2-8
MAST HYDRAULICS	2-9
END GATE HYDRAULICS	2-10
PACKER CYLINDER	2-11
LIFT CYLINDER	2-12
GRABBER CYLINDER	2-13
GATE LATCH CYLINDER	2-14
30" MAST EXTENSION CYLINDER	2-15
48" MAST EXTENSION CYLINDER	2-16
GATE LIFT CYLINDER	2-17
TRUXMORE CYLINDER	2-18

DRIVE LINE

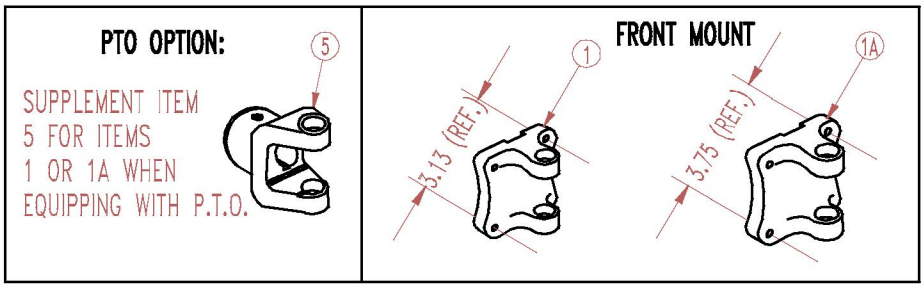

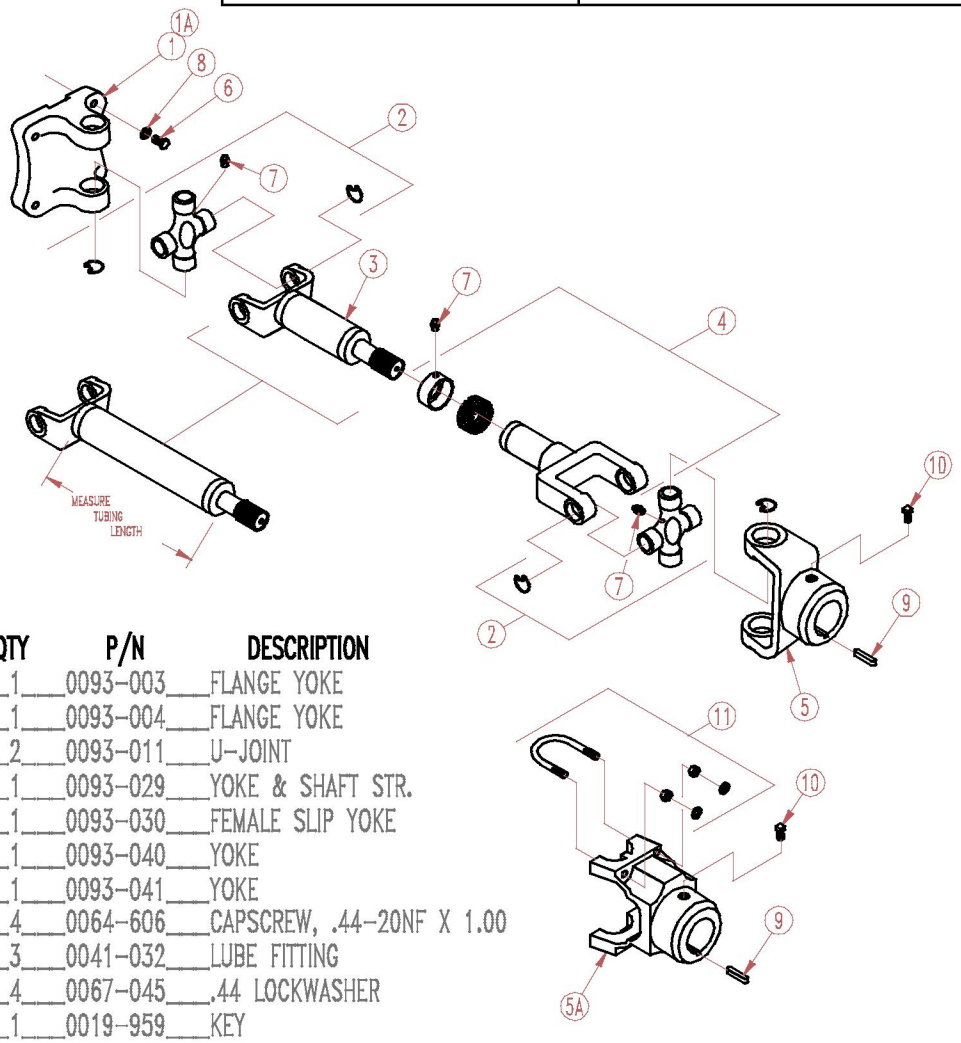

ITEM	QTY	P/N	DESCRIPTION
* 1	1	0093-003	FLANGE YOKE
** 1A	1	0093-004	FLANGE YOKE
*-** 2	2	0093-011	U-JOINT
*-** 3	1	0093-029	YOKE & SHAFT STR.
*-** 4	1	0093-030	FEMALE SLIP YOKE
*-** 5	1	0093-040	YOKE
5A	1	0093-041	YOKE
6	4	0064-606	CAPSCREW, .44-20NF X 1.00
*** 7	3	0041-032	LUBE FITTING
8	4	0067-045	.44 LOCKWASHER
9	1	0019-959	KEY
10	1	0064-622	SET SCREW, .38-16NC X .75
11	1	0093-043	U-BOLT KIT

* RECEIVED IN DRIVE LINE KIT (P/N 0605-002)
** RECEIVED IN DRIVE LINE KIT (P/N 0605-003)
*** 1 COMES WITH EACH 0093-011 "U-JOINT" & 0093-030 "FEMALE SLIP YOKE"

CONTROL VALVE 0024-019
W/1 OPTIONAL SECTION 0024-020
W/2 OPTIONAL SECTION 0024-021

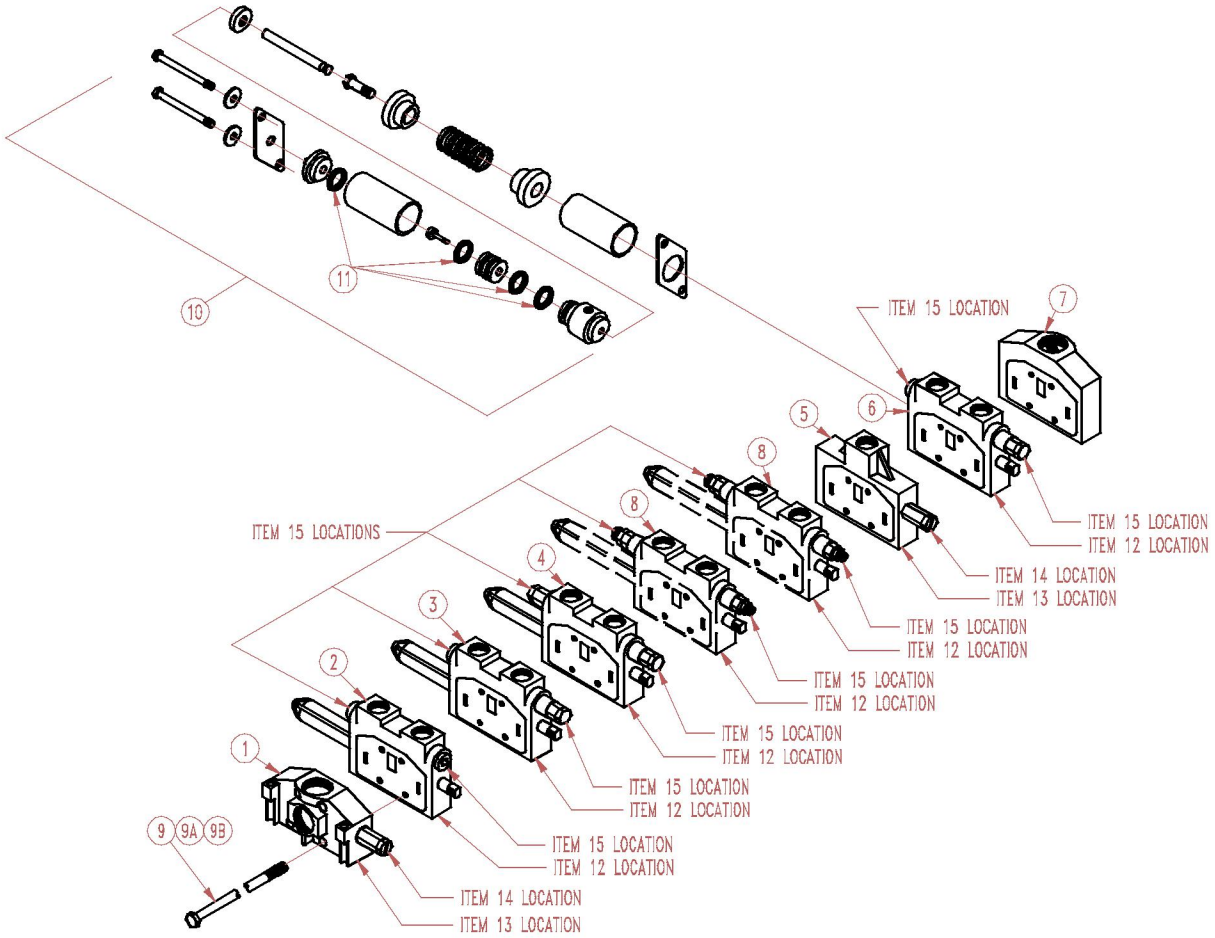

ITEM	QTY	P/N	DESCRIPTION
1	1	0026-200	INLET
2	1	0026-201	VALVE SECTION
3	1	0026-202	VALVE SECTION
4	1	0026-203	VALVE SECTION
5	1	0026-205	MIDDLE INLET
6	1	0026-214	VALVE SECTION
7	1	0026-208	OUTLET
8	2	0026-204	VALVE SECTION (OPTIONAL SECT.)
9	4	0026-215	STUD ASSEMBLY (FOR 0024-019 CONT. VALVE)
9A	4	0026-209	STUD ASSEMBLY (FOR 0024-020 CONT. VALVE)
9B	4	0026-210	STUD ASSEMBLY (FOR 0024-021 CONT. VALVE)
10	1	0026-211	PNEUMATIC ACTIVATOR ASSEMBLY
11	1	0026-144	PNEUMATIC ACTIVATOR SEAL KIT
12	6	0026-134	SEAL KIT
13	2	0026-136	SEAL KIT
14	2	0026-137	SEAL KIT
15	12	0026-128	SEAL KIT

HYDRAULIC TANK

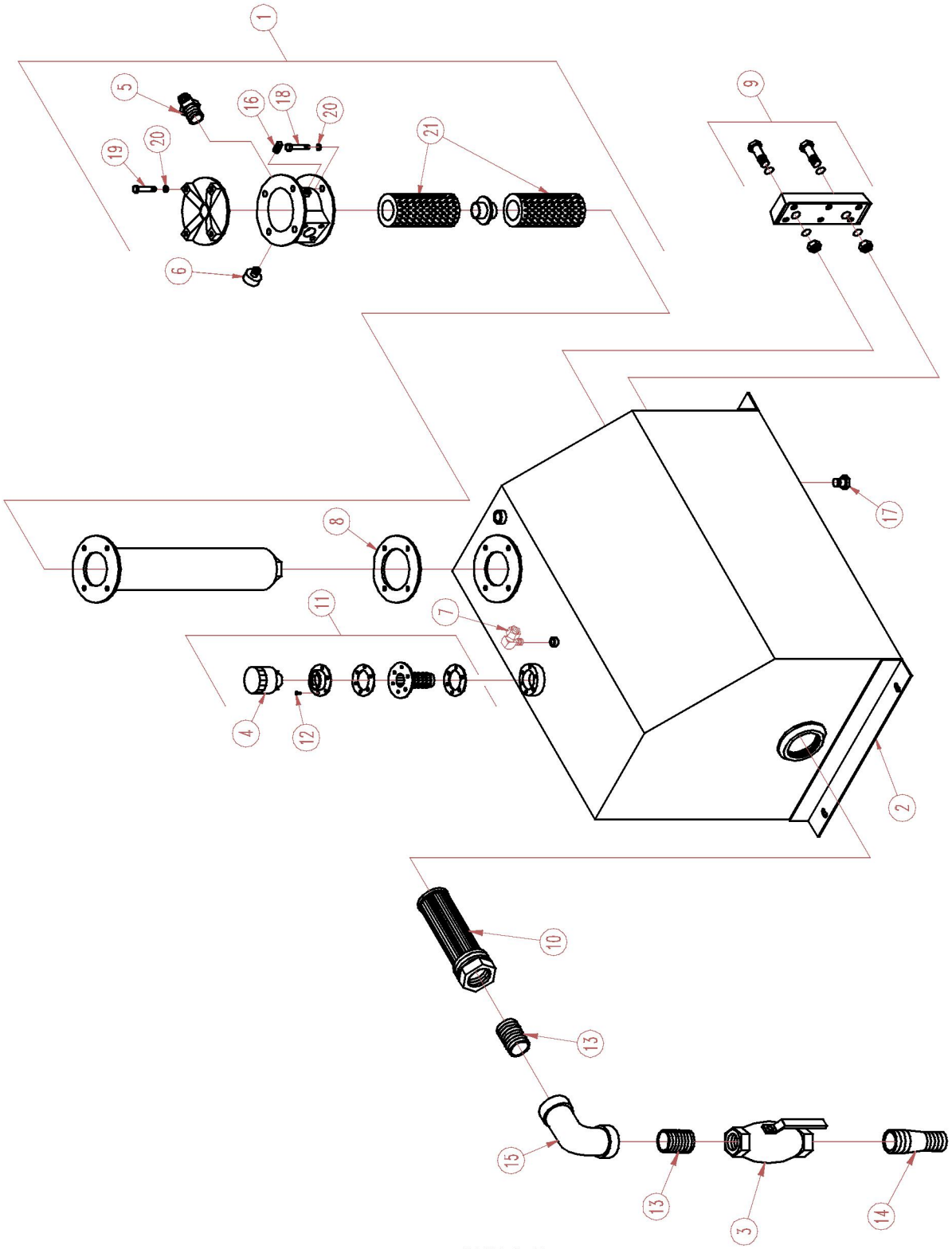

HYDRAULIC TANK

	ITEM	QTY	P/N	DESCRIPTION
	1	1	0600-448	MODIFIED FILTER
	2	1	0605-202	R.H. HYDRAULIC TANK STRUCTURE (FOR L.H. UNITS)
	2A	1	0605-210	L.H. HYDRAULIC TANK STRUCTURE (FOR R.H. UNITS)
	3	1	0024-042	BALL VALVE
**	4	1	0039-133	BREATHER CAP
	5	1	0032-788	ADAPTER
*	6	1	0039-041	GAUGE
	7	1	0034-890	ADAPTER
	8	1	0039-011	GASKET
	9	1	0039-078	SIGHT GAUGE
	10	1	0039-121	SUCTION STRAINER (NON-PRESSURIZED)
	11	1	0039-132	BREATHER ASSEMBLY
**	12	6	0064-413	SCREW, #10-32NF X .50 PAN HEAD
	13	2	0041-808	2.00 NIPPLE
	14	1	0041-846	2.00 COMBO NIPPLE
	15	1	0042-124	2.00 ELL
	16	1	0042-264	.13 PLUG
	17	1	0042-325	1.25 PLUG
	18	4	0060-399	CAPSCREW, .38-16NC X 1.25
	19	4	0060-407	CAPSCREW, .38-16NC X 1.50
	20	8	0067-034	.38 LOCKWASHER
*	21	2	0039-022	ELEMENT

*** SERVICE PART FOR 0600-448 MODIFIED FILTER**
**** SERVICE PART FOR 0039-132 BREATHER ASSEMBLY**

HYDRAULIC SYSTEM

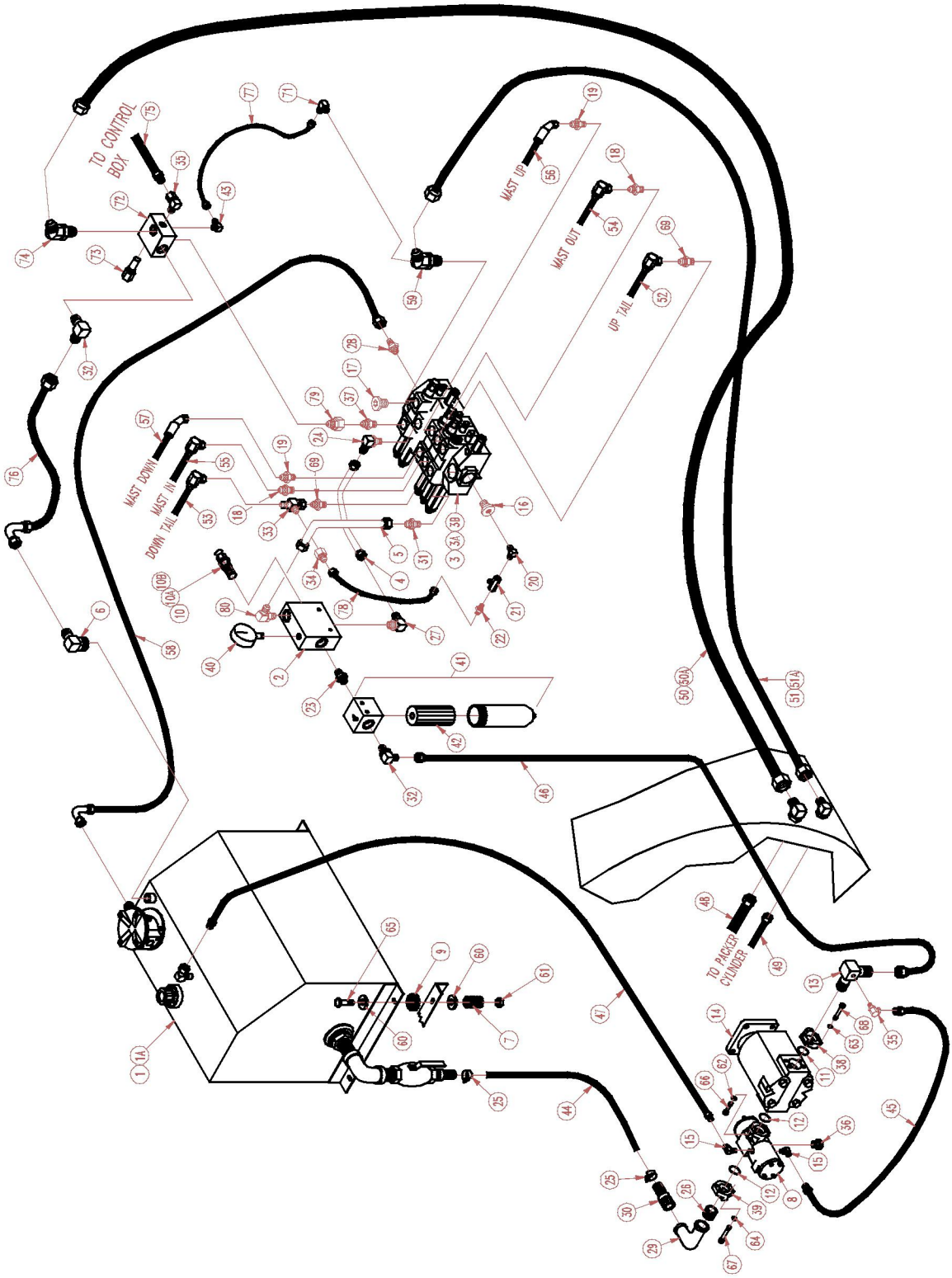

HYDRAULIC SYSTEM

ITEM	QTY	P/N	DESCRIPTION
1	1	0605-194	L.H. HYDRAULIC TANK ASSEMBLY
1A	1	0605-183	R.H. HYDRAULIC TANK ASSEMBLY
2	1	0039-141	CARTRIDGE BLOCK
3	1	0024-019	VALVE
3A	1	0024-020	VALVE (W/1 OPTIONAL SECT.)
3B	1	0024-021	VALVE (W/2 OPTIONAL SECT.)
4	1	0089-010	TUBE ASSEMBLY
5	1	0089-011	TUBE ASSEMBLY
6	1	0035-175	ADAPTER
7	4	0045-220	COIL SPRING
8	1	0024-032	DRY VALVE
9	4	0045-212	RUBBER PAD
10	1	0026-022	20 G.P.M. CARTRIDGE (STD.)
10A	1	0026-014	16 G.P.M. CARTRIDGE
10B	1	0026-023	25 G.P.M. CARTRIDGE
11	1	0027-285	O-RING
12	2	0027-310	O-RING
13	1	0604-436	MODIFIED FITTING
14	1	0028-019	PUMP
15	2	0036-098	ADAPTER
16	1	0605-124	MODIFIED FITTING
17	1	0036-459	PLUG
18	2	0033-507	ADAPTER
19	2	0033-540	ADAPTER
20	1	0035-900	ADAPTER
21	1	0024-095	FLOW CONTROL
22	1	0032-725	ADAPTER
23	1	0034-128	ADAPTER
24	1	0035-618	ADAPTER
25	2	0045-102	HOSE CLAMP
26	1	0041-808	2.00 NIPPLE
27	1	0035-634	ADAPTER
28	1	0033-668	ADAPTER
29	1	0042-124	2.00 EL
30	1	0041-846	COMBO NIPPLE

(CONT.)

ITEM	QTY	P/N	DESCRIPTION
31	1	0033-596	ADAPTER
32	2	0035-645	ADAPTER
33	1	0036-858	ADAPTER
34	1	0034-133	ADAPTER
35	2	0034-878	ADAPTER
36	1	0036-283	ADAPTER
37	1	0033-631	ADAPTER
38	1	0037-397	FLANGE PAD
39	1	0037-421	FLANGE PAD
40	1	0039-105	GAUGE
41	1	0039-060	PRESSURE FILTER
* 42	1	0039-086	ELEMENT
43	1	0035-508	ADAPTER
44	1	0019-398	SUCTION HOSE, 2.00 100R12 X _____ (SPECIFY LENGTH)
45	1	0090-183	HOSE ASSEMBLY
46	1	-	HOSE ASSEMBLY
47	1	-	HOSE ASSEMBLY
48	1	0090-155	HOSE ASSEMBLY
49	1	0090-201	HOSE ASSEMBLY
50	1	0090-164	HOSE ASSEMBLY (FOR L.H. UNIT)
50A	1	0090-165	HOSE ASSEMBLY (FOR R.H. UNIT)
51	1	0090-203	HOSE ASSEMBLY (FOR L.H. UNIT)
51A	1	0090-204	HOSE ASSEMBLY (FOR R.H. UNIT)
52	1	0090-117	HOSE ASSEMBLY
53	1	0090-109	HOSE ASSEMBLY
54	1	0090-036	HOSE ASSEMBLY
55	1	0090-035	HOSE ASSEMBLY
56	1	0090-235	HOSE ASSEMBLY
57	1	0090-249	HOSE ASSEMBLY
58	1	0090-174	HOSE ASSEMBLY
59	1	0604-439	MODIFIED FITTING
60	8	0066-055	.50 FLATWASHER

(CONT.)

HYDRAULIC SYSTEM (CONT.)

ITEM	QTY	P/N	DESCRIPTION
61	4	0065-209	HEX NUT, .50-13NC NYLOCK
62	4	0067-056	.50 LOCKWASHER
63	4	0067-147	.44 LOCKWASHER, HI COLLAR
64	4	0067-155	.50 LOCKWASHER, HI COLLAR
65	4	0060-840	CAPSCREW, .50-13NC X 3.50
66	4	0064-528	CAPSCREW, .50-13NC X 1.25 SOCKETHEAD
67	4	0064-531	CAPSCREW, .50-13NC X 2.00 SOCKETHEAD
68	4	0064-520	CAPSCERW, .44-14NC X 1.75 SOCKETHEAD
69	2	0605-128	MODIFIED FITTING
* 70	1	0039-061	SEAL KIT
71	1	0035-116	ADAPTER
72	1	0039-139	ALUMINUM BLOCK
73	1	0039-140	CARTRIDGE
74	1	0034-666	ADAPTER
75	1	0090-050	HOSE ASSEMBLY
76	1	0090-347	HOSE ASSEMBLY
77	1	0090-340	HOSE ASSEMBLY
78	1	0090-051	HOSE ASSEMBLY
79	1	0034-125	ADAPTER
80	1	0035-626	ADAPTER

*** SERVICE PART FOR 0039-060 PRESSURE FILTER**

MAST HYDRAULICS

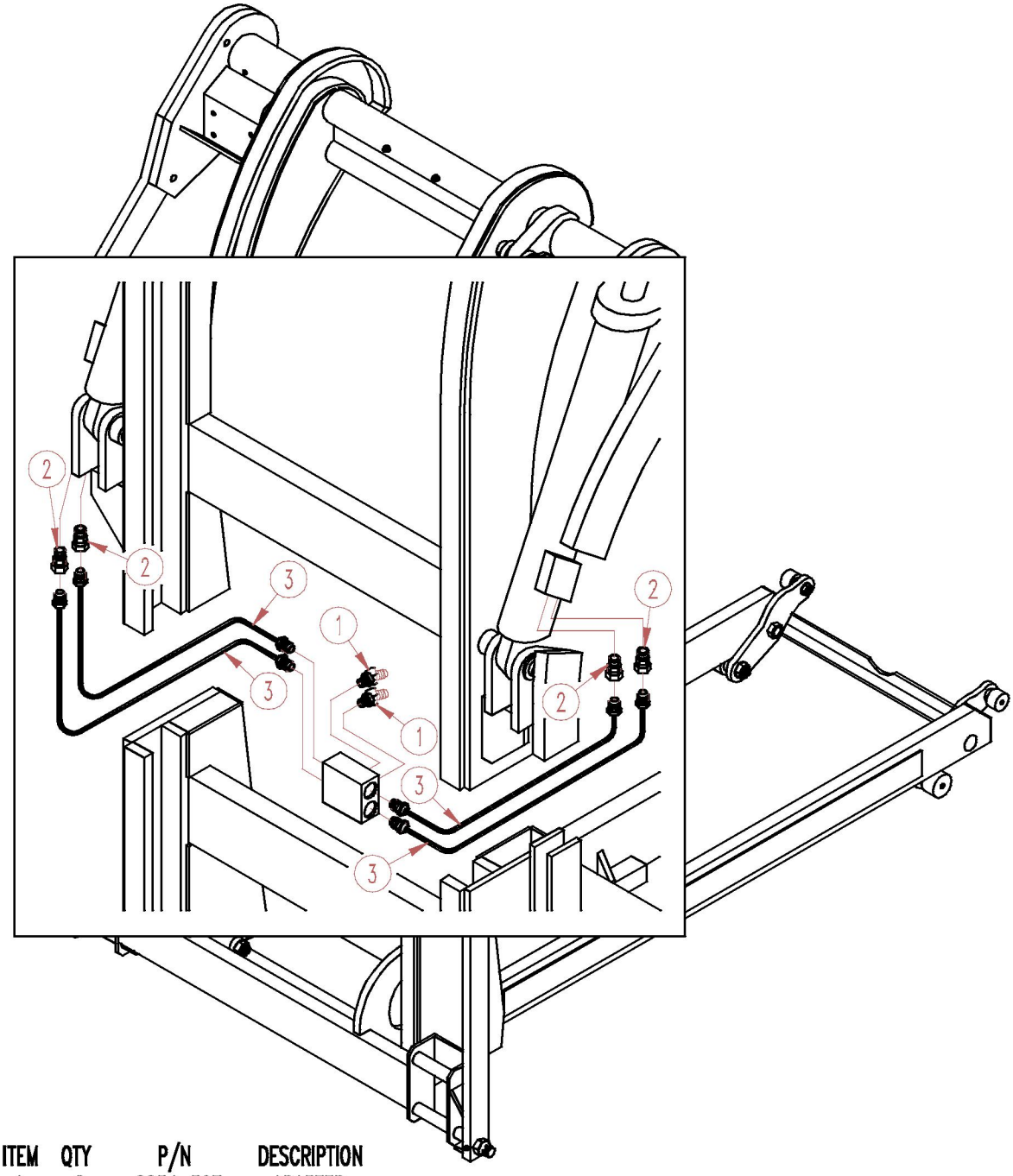

ITEM	QTY	P/N	DESCRIPTION
1	2	0034-397	ADAPTER
2	4	0033-992	ADAPTER
3	4	0090-038	HYDRAULIC HOSE

END GATE HYDRAULICS

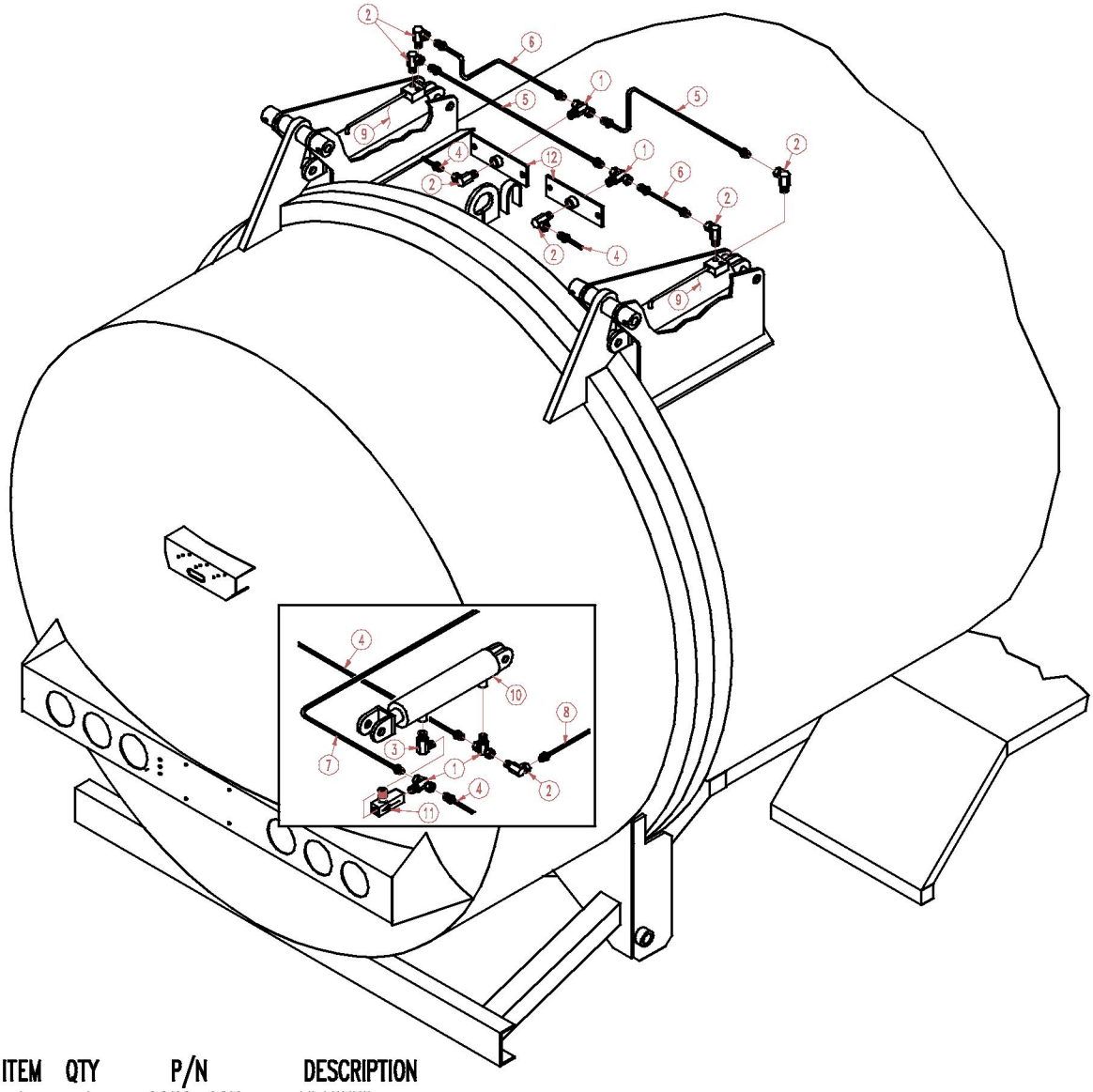

ITEM	QTY	P/N	DESCRIPTION
1	4	0036-627	ADAPTER
2	6	0034-946	ADAPTER
3	1	0035-895	ADAPTER
4	2	0090-018	HYDRAULIC HOSE
5	2	0090-101	HYDRAULIC HOSE
6	2	0090-085	HYDRAULIC HOSE
7	1	0090-109	HYDRAULIC HOSE
8	1	0090-117	HYDRAULIC HOSE
9	2	0020-150	HYDRAULIC CYLINDER
10	1	0020-112	HYDRAULIC CYLINDER
11	1	0024-098	FLOW CONTROL
12	2	(REF.)	COUPLER STRUCTURE

PACKER CYLINDER
(C.H.)

P/N 0020-009 (186")
P/N 0020-017 (210")
P/N 0020-028 (234")

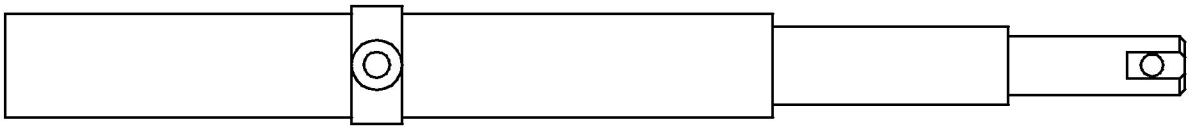

USE REPLACEMENT SEAL KIT: MINOR # 0022-429
MAJOR # 0022-430

LIFT CYLINDER
P/N 0020-077

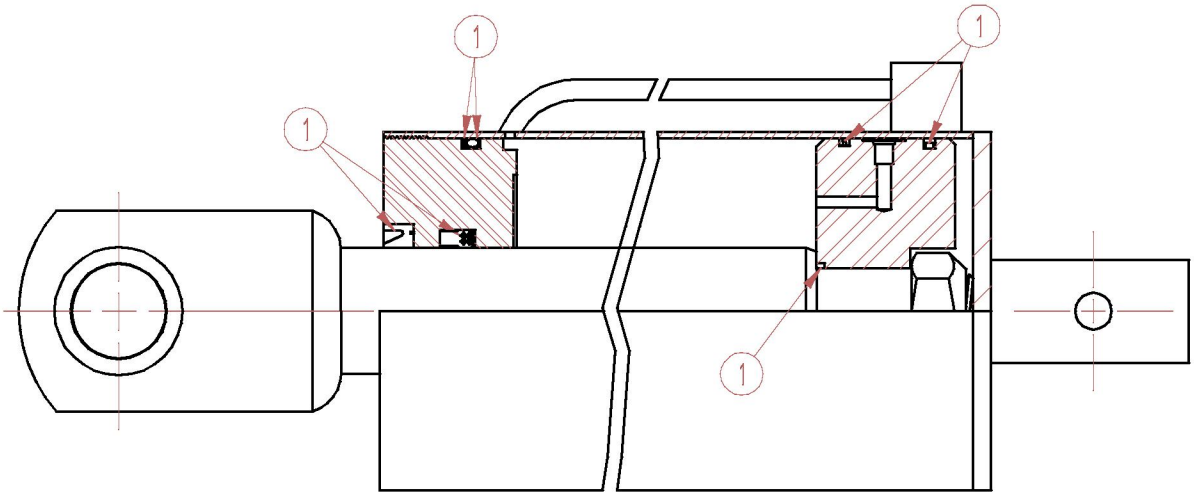

ITEM	QTY	P/N	DESCRIPTION
1	1	0022-454	SEAL KIT

GRABBER CYLINDER

P/N 0020-095 (1.50 BORE)

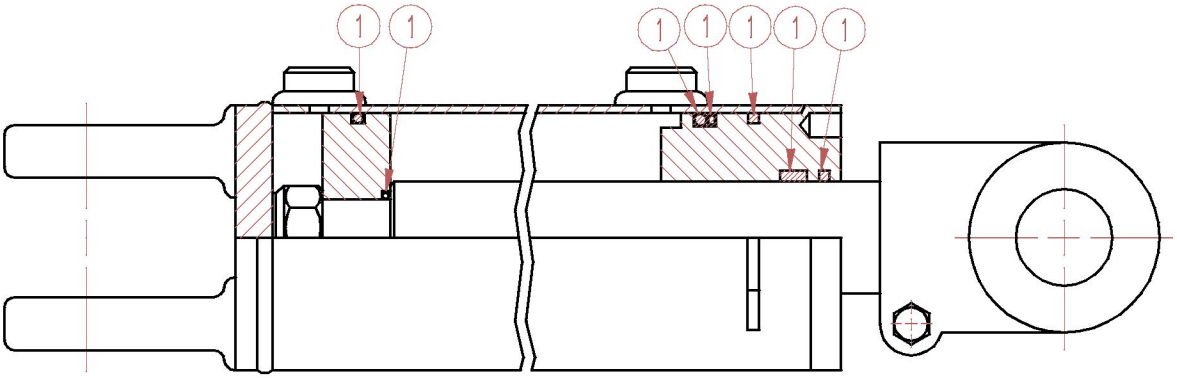

ITEM	QTY	P/N	DESCRIPTION
1	1	0022-465	SEAL KIT

GATE LATCH CYLINDER
P/N 0020-112

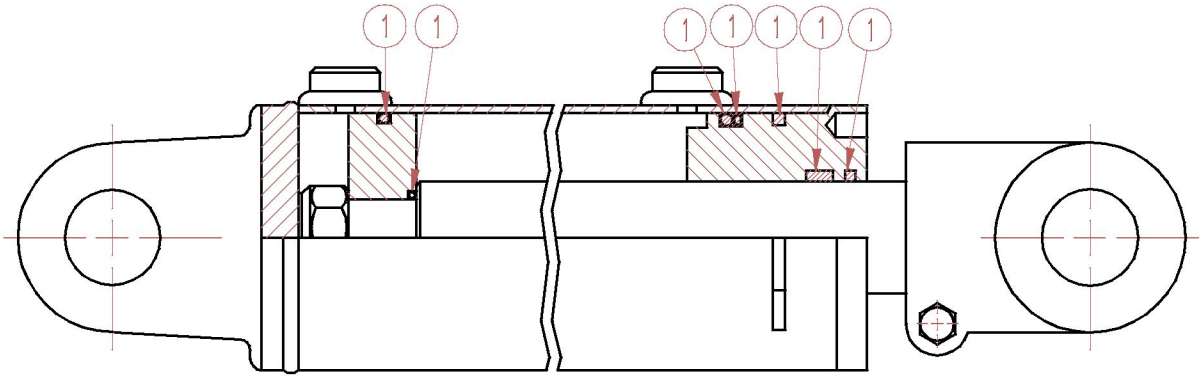

ITEM	QTY	P/N	DESCRIPTION
1	1	0022-142	SEAL KIT

30" MAST EXTENSION CYLINDER
P/N 0020-120

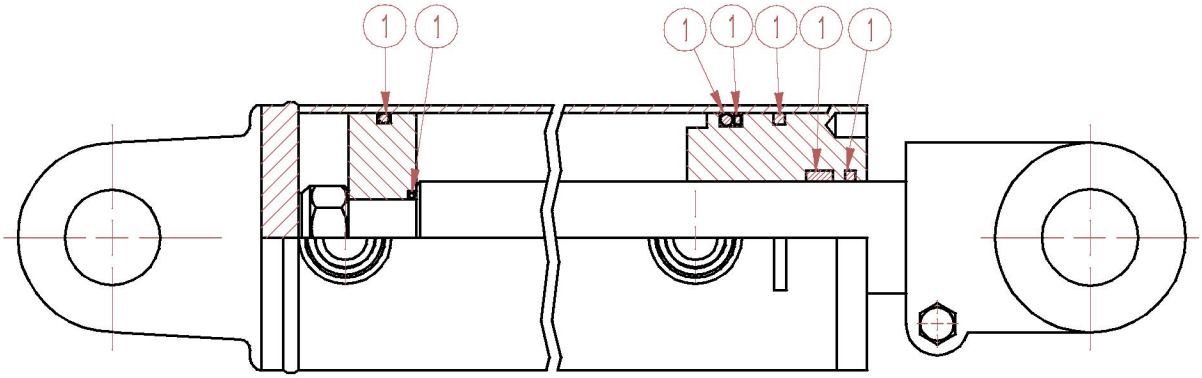

ITEM	QTY	P/N	DESCRIPTION
1	1	0022-206	SEAL KIT

48" MAST EXTENSION CYLINDER
P/N 0020-138

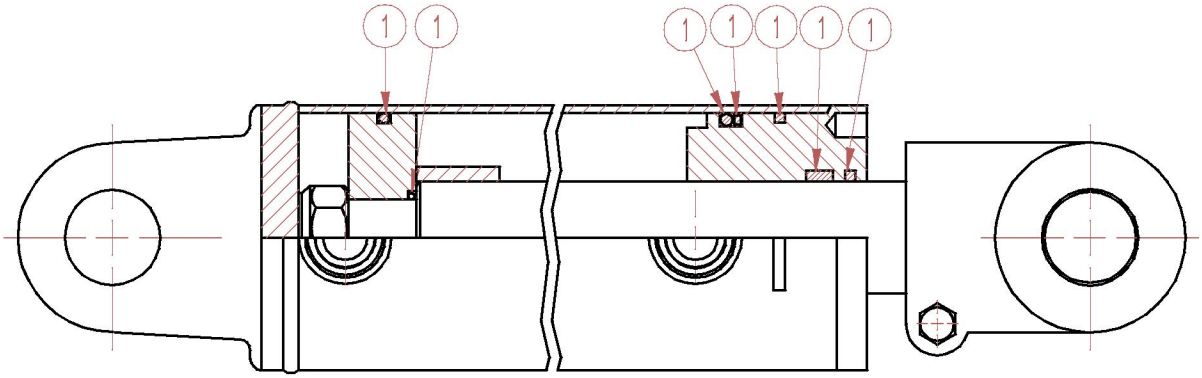

ITEM	QTY	P/N	DESCRIPTION
1	1	0022-206	SEAL KIT

GATE LIFT CYLINDER
P/N 0020-150

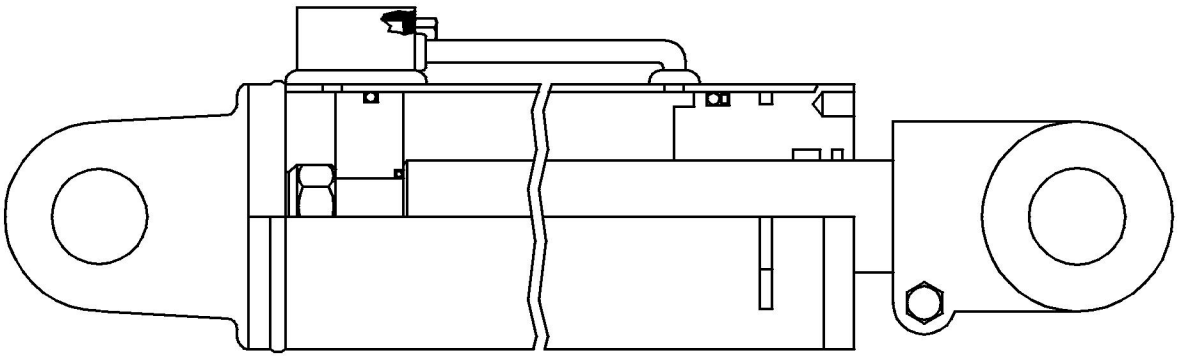

ITEM	QTY	P/N	DESCRIPTION
1	1	0022-142	SEAL KIT
2	1	0022-143	CHECK VALVE (INCLUDED W/CYLINDER)

TRUXMORE CYLINDER
P/N 0020-110

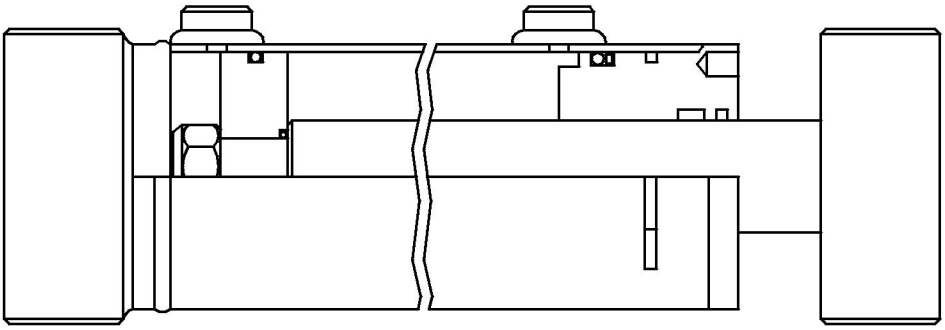

ITEM	QTY	P/N	DESCRIPTION
1	1	0022-362	SEAL KIT

SECTION 3
ELECTRICAL

ELECTRICAL SCHEMATICS	
CHASSIS (EXT.) MOUNTED CONTROL BOX	3-1
CAB MOUNTED CONTROL BOX	3-2
WIRING HARNESSES (BODY)	3-3
REAR BODY LIGHT HARNESS KIT	3-4
ELECTRICAL PARTS	3-5, 3-6, 3-7
COMPLETE CONTROL BOX ASSEMBLIES	3-8
LIGHTS	3-9

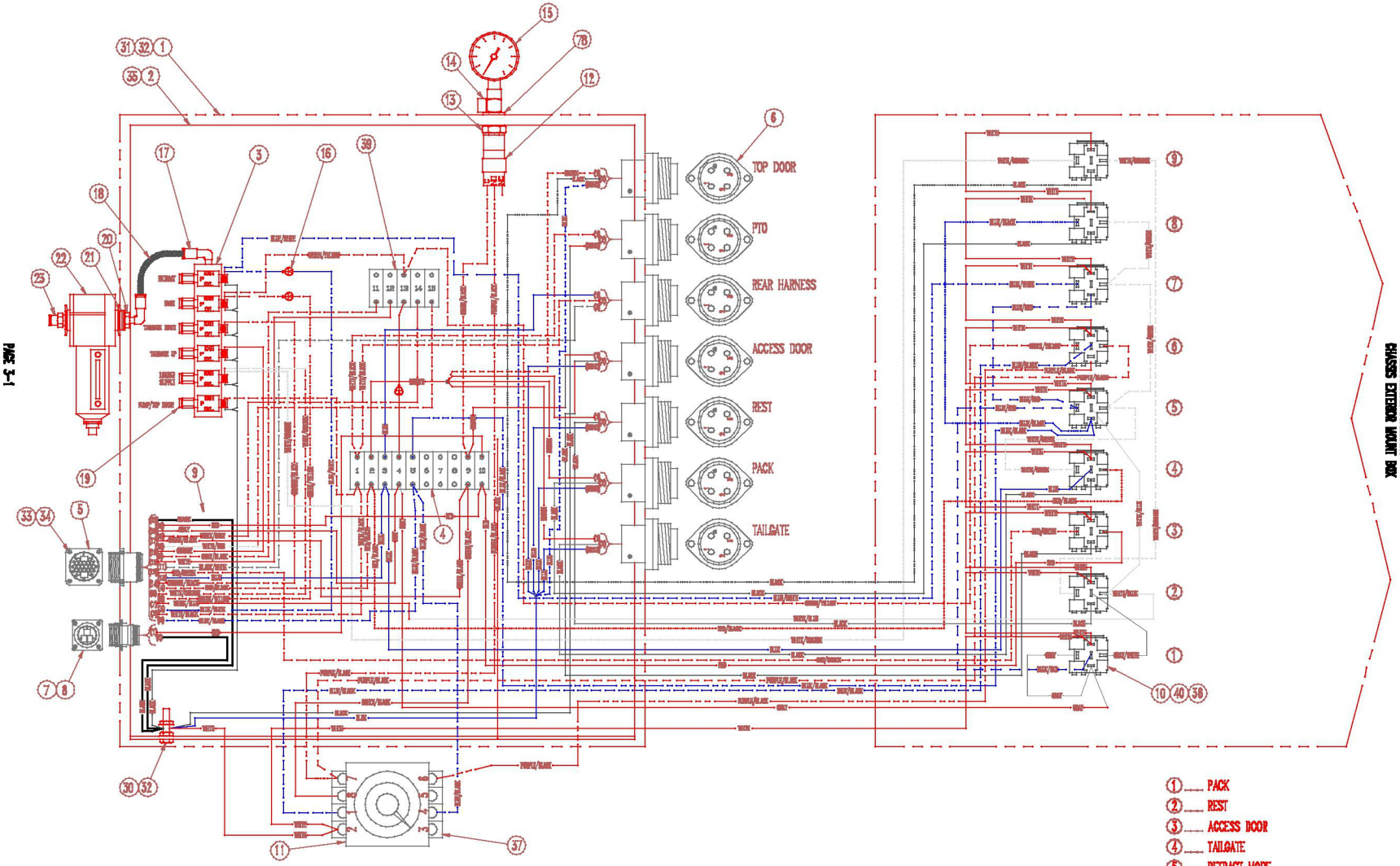

ELECTRICAL SCHEMATIC
CHASSIS EXTERIOR MOUNT BOX

1 ___ PACK
2 ___ REST
3 ___ ACCESS DOOR
4 ___ TAILGATE
5 ___ RETRACT MODE
6 ___ TIMER RETRACT
7 ___ RETRACT VALVE
8 ___ PROX. RETRACT
9 ___ TOP DOOR

ELECTRICAL SCHEMATIC
CAB MOUNTED BOX

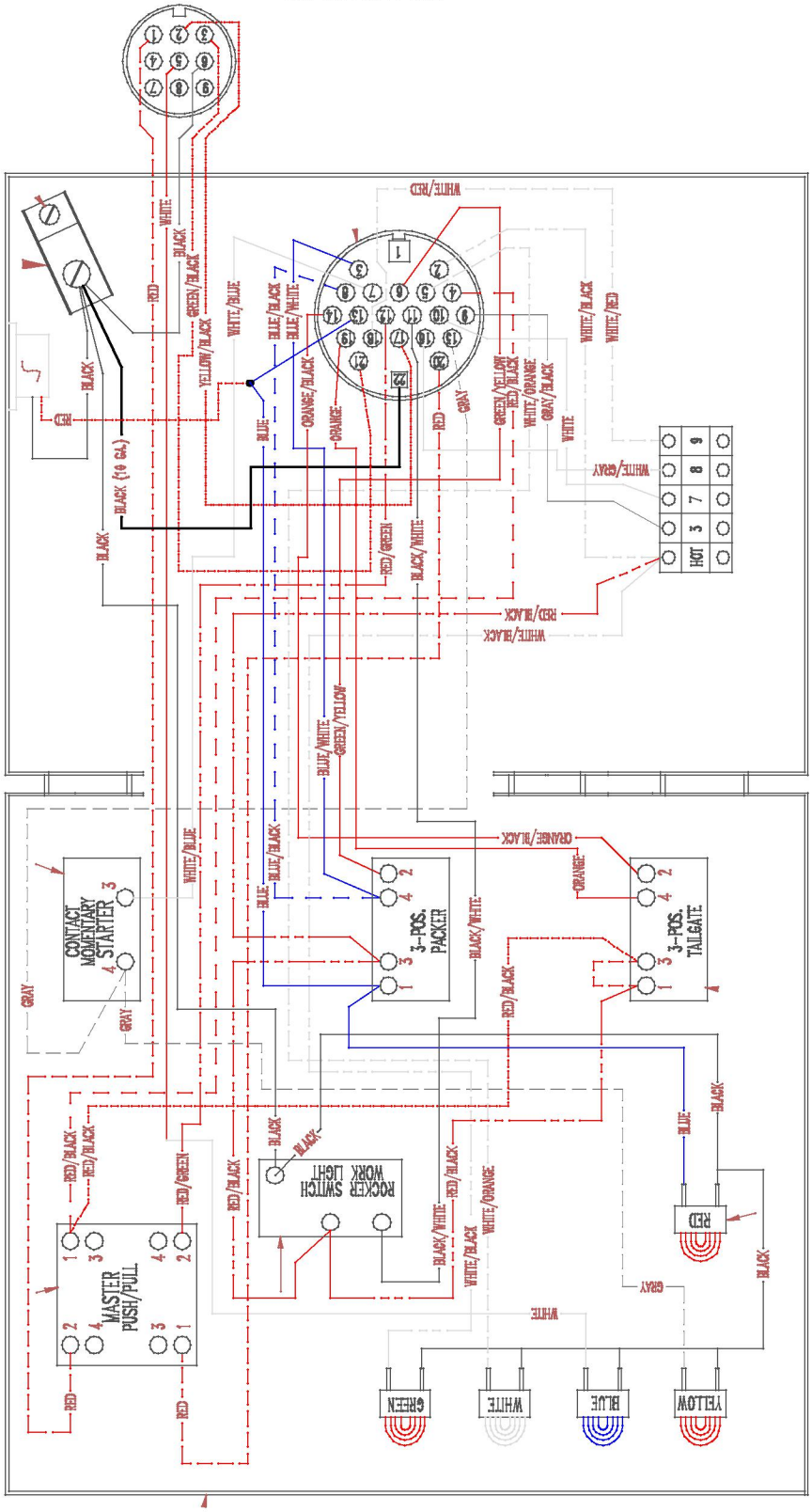

ELECTRICAL SCHEMATIC
WIRING HARNESSES

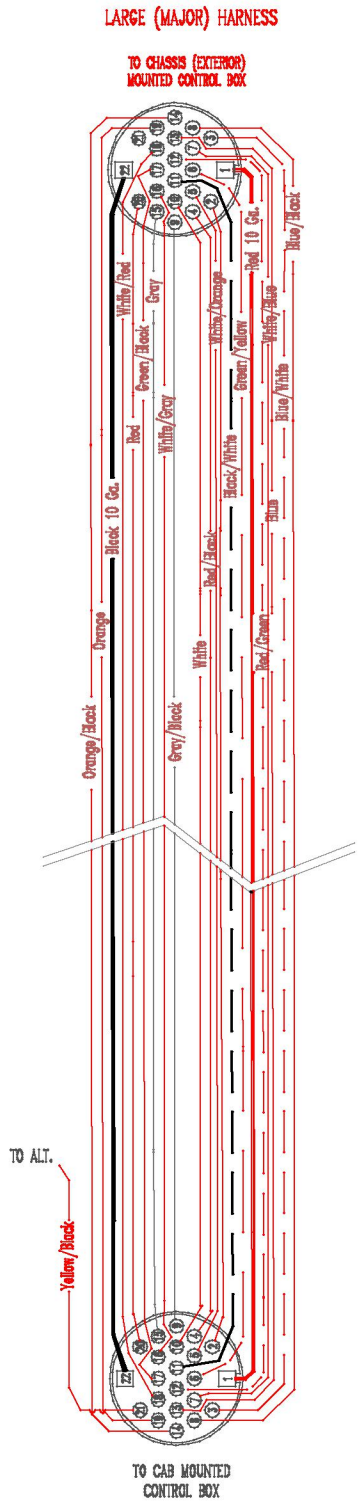

REAR BODY LIGHT HARNESS KIT

STD. TAILGATE KIT 0602-858
BUBBLE TAILGATE KIT 0602-857

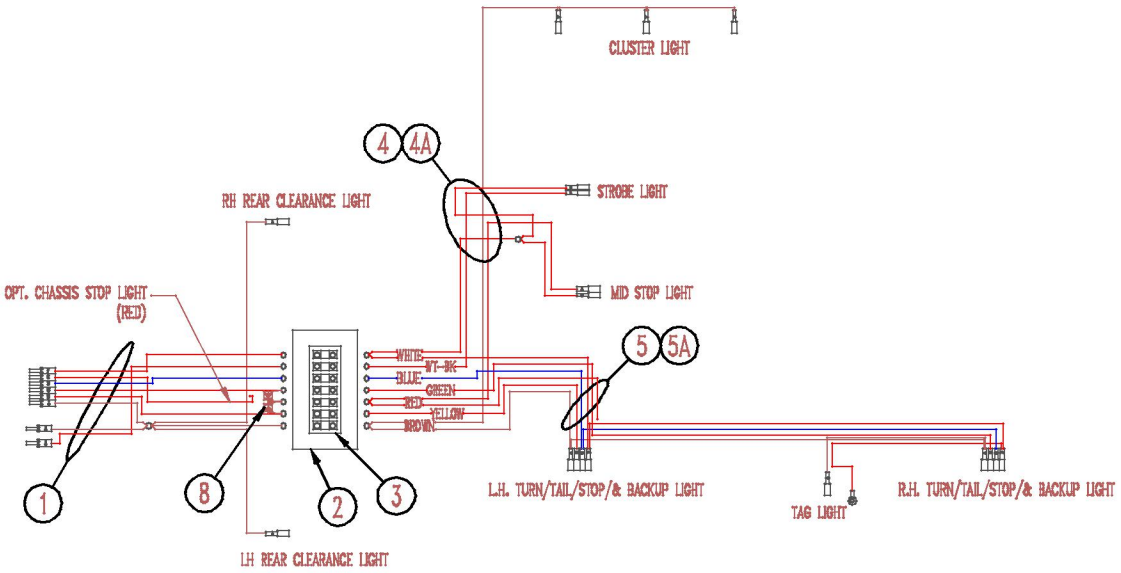

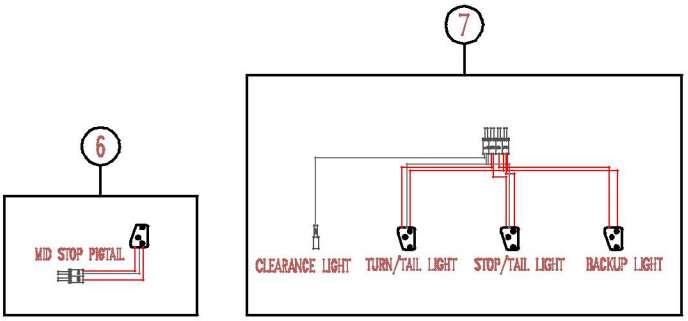

ITEM	QTY	P/N	DESCRIPTION
1	1	0602-863	REAR BODY CONNECTING HARNESS
2	1	0059-248	BERG BOX (LOCATED REAR TOP OF BODY)
3	1	0053-417	10 TERMINAL BLOCK SECTION
4	1	0602-862	TAILGATE CLUSTER/BRAKE/STROBE HARNESS (STD.)
4A	1	0602-864	TAILGATE CLUSTER/BRAKE/STROBE HARNESS (BUBBLE)
5	1	0602-860	TAILGATE LIGHTBAR HARNESS (STD.)
5A	1	0602-861	TAILGATE LIGHTBAR HARNESS (BUBBLE)
6	1	0055-402	STOP LAMP PIGTAIL ASSEMBLY
7	2	0055-403	TURN/TAIL/STOP/& BACKUP PIGTAIL ASSEMBLY
8	1	0055-399	DIODE ASSEMBLY (NOT REQ. IF CHASSIS EQUIPPED STOP LIGHT)

ELECTRICAL PARTS

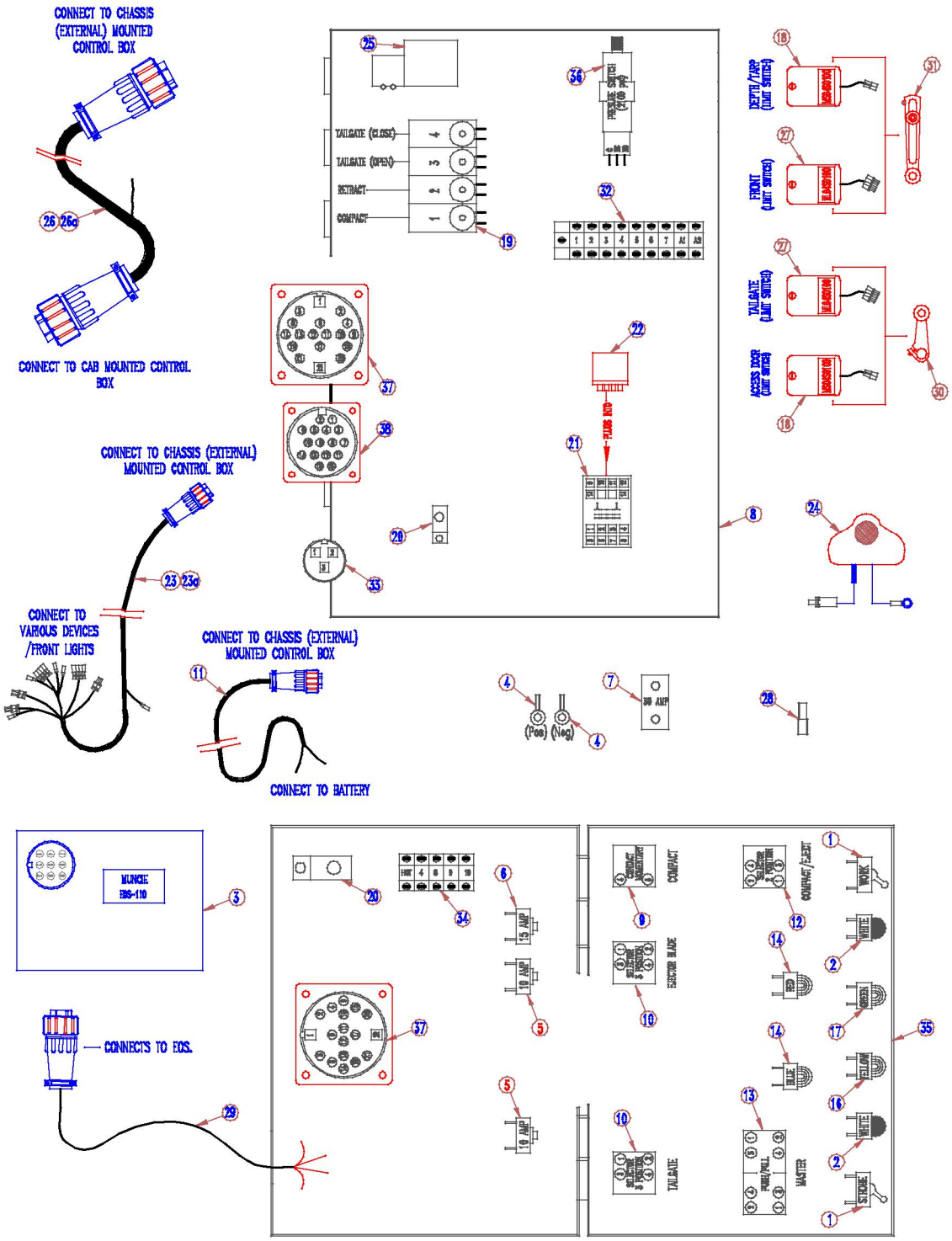

ELECTRICAL PARTS

ITEM	QTY	P/N	DESCRIPTION
1	2	0054-001	TOGGLE SWITCH (1 FOR SWEEP OPTION)
2	2	0059-113	WHITE PILOT LIGHT
3	1	0054-141	ELECTRONIC OVERSPEED SWITCH
4	2	0053-196	LUG TYPE CONNECTOR, ELECTRICAL
5	2	0053-545	10 AMP CIRCUIT BREAKER, RESETABLE
6	1	0053-546	15 AMP CIRCUIT BREAKER, RESETABLE
7	1	0053-579	30 AMP CIRCUIT BREAKER
8	1	(REF.)	OUTSIDE CONTROL BOX
9	1	0054-050	MOMENTARY CONTACT SWITCH
10	2	0054-049	3 POSITION SELECTOR SWITCH (MOMENTARY)
11	1	0602-849	OUTSIDE POWER BOX CORD
12	1	0054-038	2 POSITION SELECTOR SWITCH (MAINTAINED)
13	1	0054-068	MAINTAINED CONTACT SWITCH
14	1	0059-133	BLUE PILOT LIGHT
15	1	0059-117	RED PILOT LIGHT
16	1	0059-144	YELLOW PILOT LIGHT
17	1	0059-109	GREEN PILOT LIGHT
18	4	0055-950	LIMIT SWITCH ASSEMBLY
19	1	0085-206	4 STATION AIR VALVE
20	1	0059-257	UNIVERSAL LUG
21	1	0054-130	SOCKET
22	1	0054-111	RELAY
23	1	0602-850	IMPAC CONTROL HARNESS, (STD.)
23a	1	0602-851	IMPAC CONTROL HARNESS, (TARP)
24	1	0055-201	BACK UP ALARM ASSEMBLY
25	1	0085-280	3-WAY CONTROL VALVE
26	1	0602-804	LARGE (MAJOR) WIRING HARNESS, CAB TO CHASSIS, 16 Ft. (STD)
26a	1	0602-805	LARGE (MAJOR) WIRING HARNESS, CAB TO CHASSIS, 23 Ft.
27	2	0055-951	LIMIT SWITCH ASSEMBLY
28	1	0053-317	SPADE TYPE CONNECT, ELECTRICAL
29	1	0054-142	EOS CONTROL CABLE
30	3	0059-234	LEVER ARM
31	3	0059-235	ADJUSTABLE LEVER ARM
32	1	0053-417	10 TERMINAL BLOCK SECTION (MODIFIED)

(CONT.)

ELECTRICAL PARTS

ITEM	QTY	P/N	DESCRIPTION
33	1	0059-411	SQUARE FLANGE RECEPTACLE, 3 PIN
34	1	0053-424	BLOCK BARRIER TERMINAL
35	1	(REF.)	INSIDE CONTROL BOX
36	1	0039-098	PRESSURE SWITCH
37	2	0059-409	SQUARE FLANGE RECEPTACLE, 22 PIN
38	1	0059-418	SQUARE FLANGE RECEPTACLE, 15 PIN

COMPLETE CONTROL BOX ASSEMBLIES

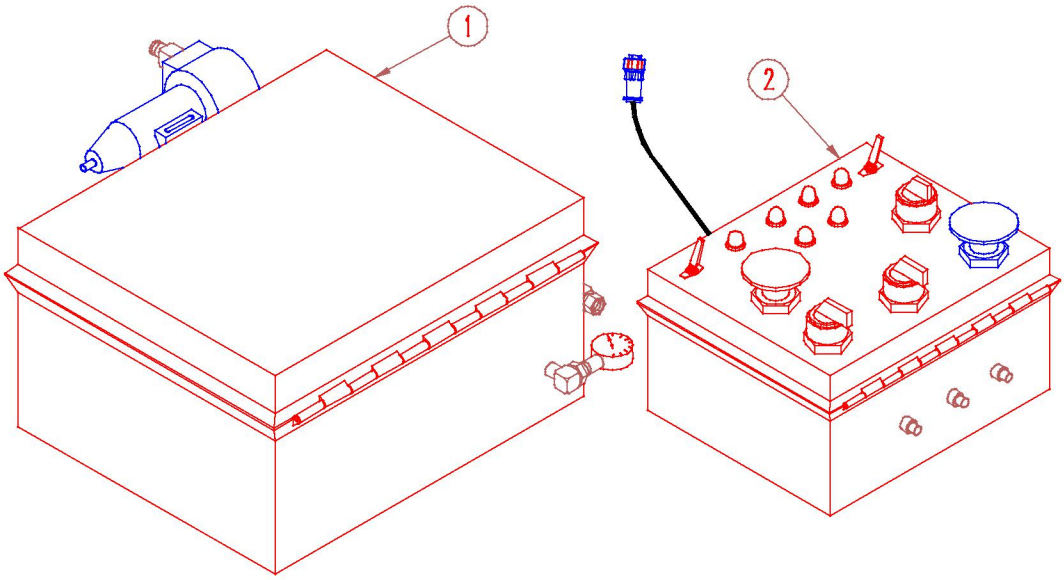

1	1	0602-923	COMPLETE OUTSIDE CONTROL BOX ASSEMBLY
2	1	0602-914	COMPLETE INSIDE CONTROL BOX ASSEMBLY

LIGHTS

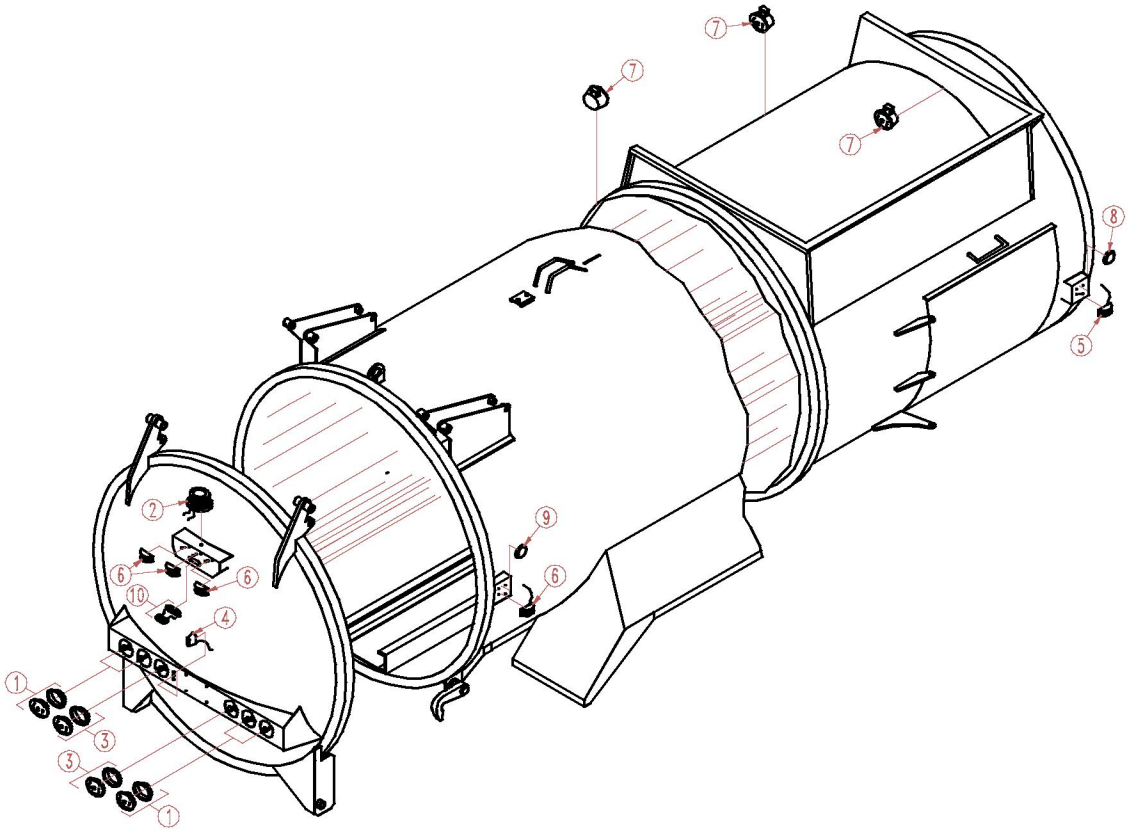

ITEM	QTY	P/N	DESCRIPTION
1	4	0050-135	STOP/TURN LAMP ASSEMBLY
2	1	0055-005	AMBER STROBE LAMP ASSEMBLY
3	2	0050-181	BACKUP LAMP ASSEMBLY
4	1	0055-004	LICENSE PLATE LAMP ASSEMBLY
5	2	0055-001	CLEARANCE MARKER LAMP ASSEMBLY (AMBER)
6	5	0055-002	CLEARANCE MARKER LAMP ASSEMBLY (RED)
7	3	0055-003	WORK LIGHT ASSEMBLY (OPTIONAL)
8	2	0052-047	REFLECTOR (AMBER)
9	2	0052-058	REFLECTOR (RED)
10	1	0050-116	STOP LAMP

SECTION 4
AIR

AIR SYSTEM

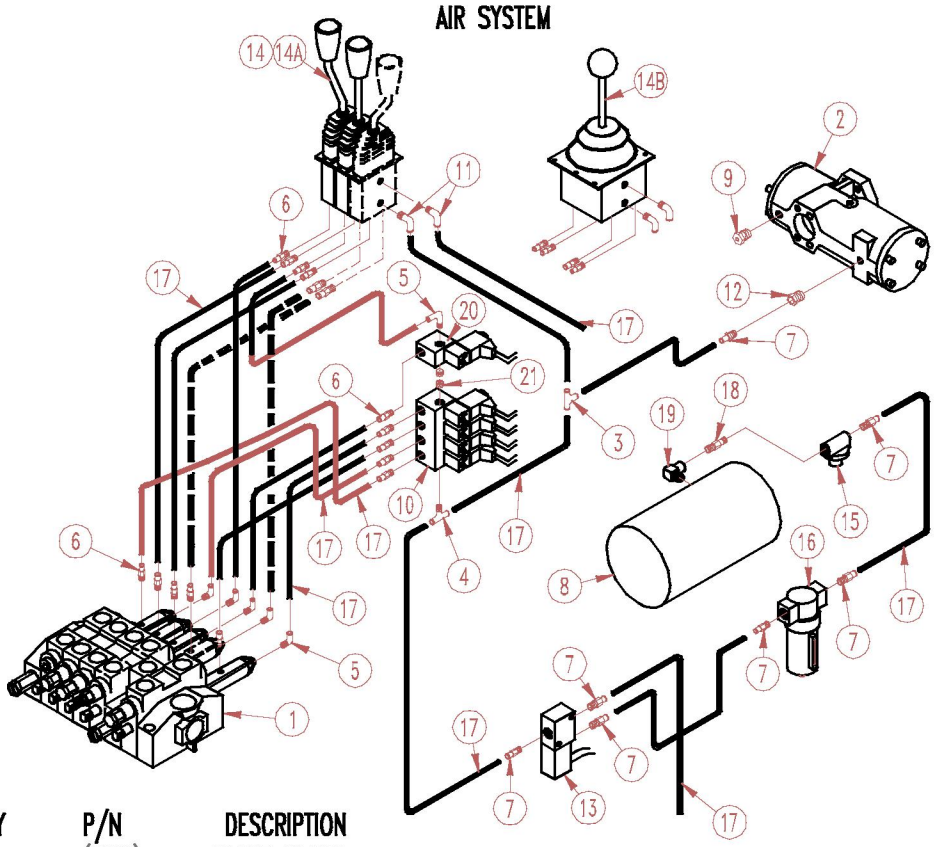

ITEM	QTY	P/N	DESCRIPTION
1	1	(REF.)	VALVE BLOCK
2	1	0024-032	DRY VALVE
3	1	0085-018	ADAPTER
4	1	0085-024	ADAPTER
5	6	0085-037	ADAPTER
6	16	0085-059	ADAPTER
7	7	0085-067	ADAPTER
8	1	(REF.)	AIR TANK
9	1	0605-130	MODIFIED FITTING
10	1	0085-206	4 STATION VALVE BANK
11	2	0085-075	ADAPTER
12	1	0033-852	ADAPTER
13	1	0085-280	SOLENOID
14	1	0085-553	AIR VALVE (3 BANK)
14A	1	0085-545	AIR VALVE (2 BANK)
14B	1	0085-554	AIR VALVE (JOYSTICK CONTROL)
15	1	0085-526	ONE WAY CHECK VALVE
16	1	0085-534	AUTO DRAIN AIR VALVE
17	19	0019-467	.25 AIR BRAKE TUBING (SPECIFY LENGTH)
18	1	0033-005	ADAPTER
19	1	0035-296	ADAPTER
20	1	0085-499	SINGLE VALVE BANK
21	2	0036-345	PLUG, .13 NPT W/INT. HEX

SECTION 5
OPTIONS

UNIVERSAL GRABBER (UG300-2A & 2B)	5-1, 5-2
TRACK MOUNT GRABBER (TG300-2A & 2B)	5-3, 5-4
LATCH ON GRABBER (LG300-2A & 2B)	5-5, 5-6
UNIVERSAL GRABBER (UG450-1A)	5-7, 5-8
TRACK MOUNT GRABBER (TG450-1A)	5-9, 5-10
LATCH ON GRABBER (LG450-1A)	5-11, 5-12
GRABBER HYDRAULICS (_G300-2A&B SERIES)	5-13, 5-14
GRABBER HYDRAULICS (_G450-1A SERIES)	5-15, 5-16
TIPPER	5-17
TRUXMORE LIFT ASSEMBLY	5-18
SPRAY SYSTEM	5-19
AERO TARP	5-20

UNIVERSAL GRABBER

(UG300-2A PART NO. 0607-200)
(UG300-2B PART NO. 0607-205)

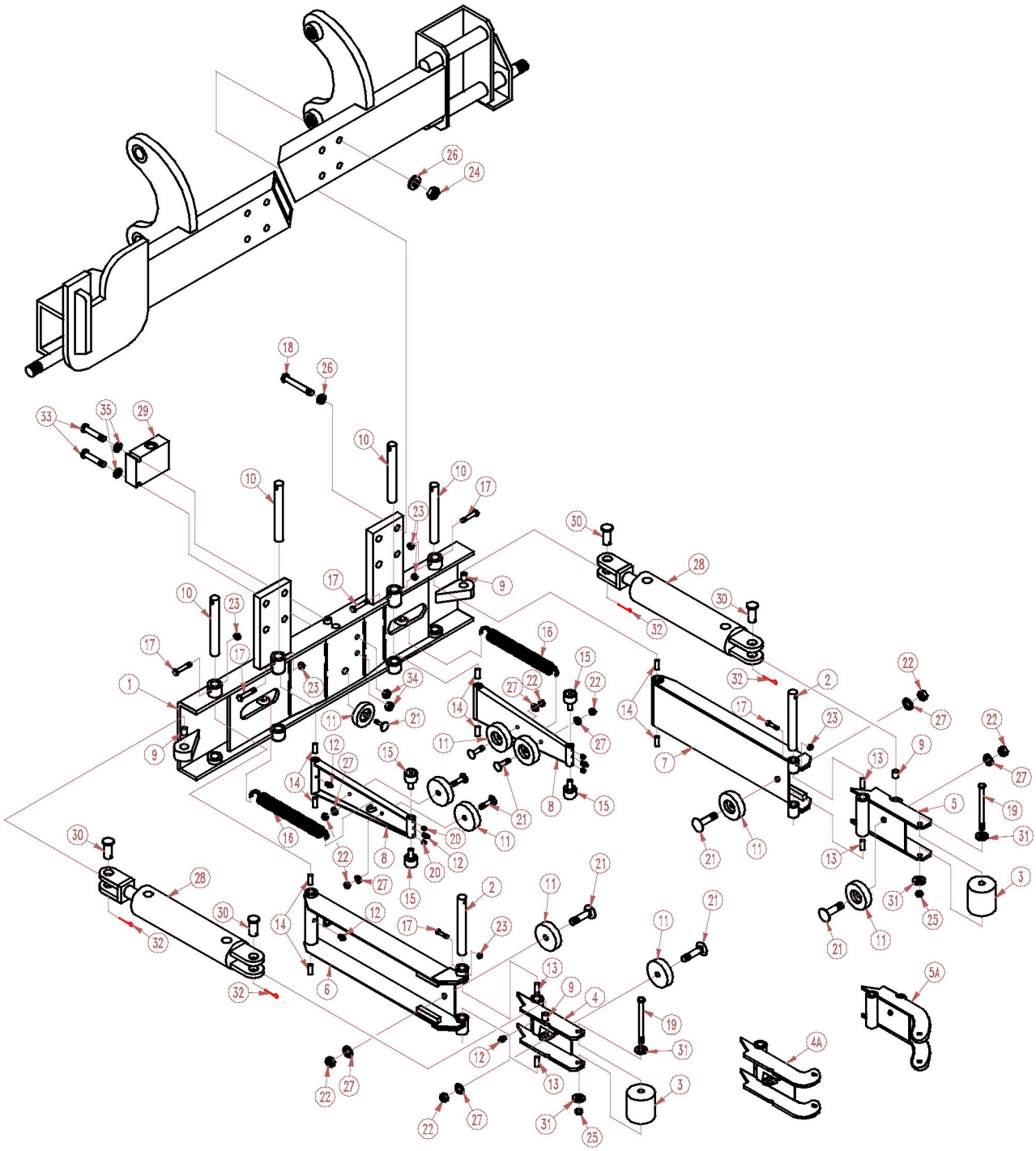

UNIVERSAL GRABBER

(UG300-2A PART NO. 0607-200)
(UG300-2B PART NO. 0607-205)

ITEM	QTY	P/N	DESCRIPTION
1	1	0607-201	UNIVERSAL BACK STRUCTURE
2	2	0607-224	DRILLED PIN
3	2	0607-108	RUBBER ROLLER
4	1	0607-238	R.H. OUTER ARM STRUCTURE (UG300-2A ONLY)
4A	1	0607-260	R.H. OUTER ARM STRUCTURE (UG300-2B ONLY)
5	1	0607-239	L.H. OUTER ARM STRUCTURE (UG300-2A ONLY)
5A	1	0607-261	L.H. OUTER ARM STRUCTURE (UG300-2B ONLY)
6	1	0607-247	R.H. MIDDLE ARM STRUCTURE
7	1	0607-248	L.H. MIDDLE ARM STRUCTURE
8	2	0607-255	INNER ARM STRUCTURE
9	4	0607-106	PRESSED FIBER BUSHING
10	4	0607-540	DRILLED PIN
11	9	0607-545	RUBBER BUMPER
12	8	0041-032	LUBE FITTING, .25-28NF
13	4	0044-296	BRONZE BUSHING
14	8	0044-297	BRONZE BUSHING
15	4	0044-533	CAM FOLLOWER, 1.63
16	2	0045-242	EXTENSION SPRING
17	6	0060-434	CAPSCREW, .38-16NC X 2.25
18	8	0060-869	CAPSCREW, .50-13NC X 4.00
19	2	0061-534	CAPSCREW, .75-10NC X 7.00
20	4	0064-634	SETSCREW, .31-18NC X .31
21	9	0064-754	ELEVATOR BOLT, .38-16NC X 1.50
22	9	0065-032	HEX NUT, .38-16NC
23	6	0065-180	HEX NUT, .38-16NC NYLOCK
24	8	0065-209	HEX NUT, .50-13NC NYLOCK
25	2	0065-532	HEX NUT, .75-10NC UNI-TORQUE
26	16	0066-055	.50 FLATWASHER
27	9	0067-034	.38 LOCKWASHER
28	2	(REF.)	HYDRAULIC CYLINDER
29	1	(REF.)	CARTRIDGE BLOCK
30	4	0040-169	CLEVIS PIN, 1.00 X 2.25
31	4	0066-089	.75 FLATWASHER
32	4	0040-512	COTTER PIN, .19 X 2.00
33	2	0060-082	CAPSCREW, .25-20NC X 2.25
34	2	0065-164	HEX NUT, .25-20NC NYLOCK
35	2	0066-014	.25 FLATWASHER

TRACK MOUNT GRABBER

(TG300-2A PART NO. 0607-210)
(TG300-2B PART NO. 0607-215)

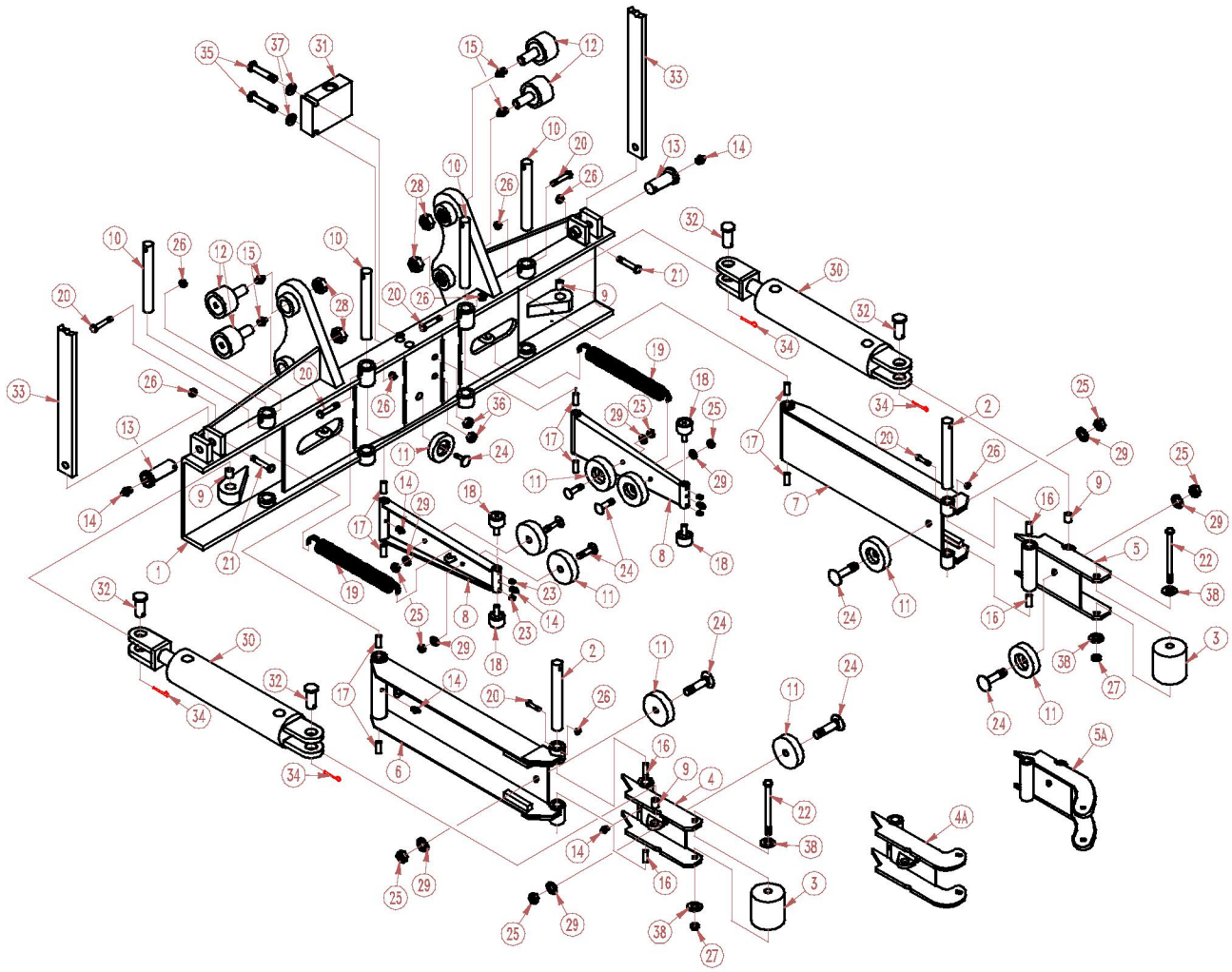

TRACK MOUNT GRABBER
(TG300-2A PART NO. 0607-210)
(TG300-2B PART NO. 0607-215)

ITEM	QTY	P/N	DESCRIPTION
1	1	0607-211	TRACK MOUNT BACK STRUCTURE
2	2	0607-224	DRILLED PIN
3	2	0607-108	RUBBER ROLLER
4	1	0607-238	R.H. OUTER ARM STRUCTURE (TG300-2A ONLY)
4A	1	0607-260	R.H. OUTER ARM STRUCTURE (TG300-2B ONLY)
5	1	0607-239	L.H. OUTER ARM STRUCTURE (TG300-2A ONLY)
5A	1	0607-261	L.H. OUTER ARM STRUCTURE (TG300-2B ONLY)
6	1	0607-247	R.H. MIDDLE ARM STRUCTURE
7	1	0607-248	L.H. MIDDLE ARM STRUCTURE
8	2	0607-255	INNER ARM STRUCTURE
9	4	0607-106	PRESSED FIBER BUSHING
10	4	0607-540	DRILLED PIN
11	9	0607-545	RUBBER BUMPER
12	4	0603-054	MODIFIED CAM FOLLOWER
13	2	0603-849	PIN STRUCTURE
14	10	0041-032	LUBE FITTING, .25-28NF
15	4	0041-123	LUBE FITTING, .25 DRIVE
16	4	0044-296	BRONZE BUSHING
17	8	0044-297	BRONZE BUSHING
18	4	0044-533	CAM FOLLOWER, 1.63
19	2	0045-242	EXTENSION SPRING
20	6	0060-434	CAPSCREW, .38-16NC X 2.25
21	2	0060-445	CAPSCREW, .38-16NC X 2.50
22	2	0061-534	CAPSCREW, .75-10NC X 7.00
23	4	0064-634	SETSCREW, .31-18NC X .31
24	9	0064-754	ELEVATOR BOLT, .38-16NC X 1.50
25	9	0065-032	HEX NUT, .38-16NC
26	8	0065-180	HEX NUT, .38-16NC NYLOCK
27	2	0065-532	HEX NUT, .75-10NC UNI-TORQUE
28	4	0065-964	HEX JAM NUT, 1.25-12NF
29	7	0067-034	.38 LOCKWASHER
30	2	(REF.)	HYDRAULIC CYLINDER
31	1	(REF.)	CARTRIDGE BLOCK
32	4	0040-169	CLEVIS PIN, 1.00 X 2.25
33	2	(REF.)	LOWER ARM STRUCTURE
34	4	0040-512	COTTER PIN, .19 X 2.00
35	2	0060-082	CAPSCREW, .25-20NC X 2.25
36	2	0065-164	HEX NUT, .25-20NC NYLOCK
37	2	0066-014	.25 FLATWASHER
38	4	0066-089	.75 FLATWASHER

LATCH ON GRABBER

(LG300-2A PART NO. 0607-220)

(LG300-2B PART NO. 0607-223)

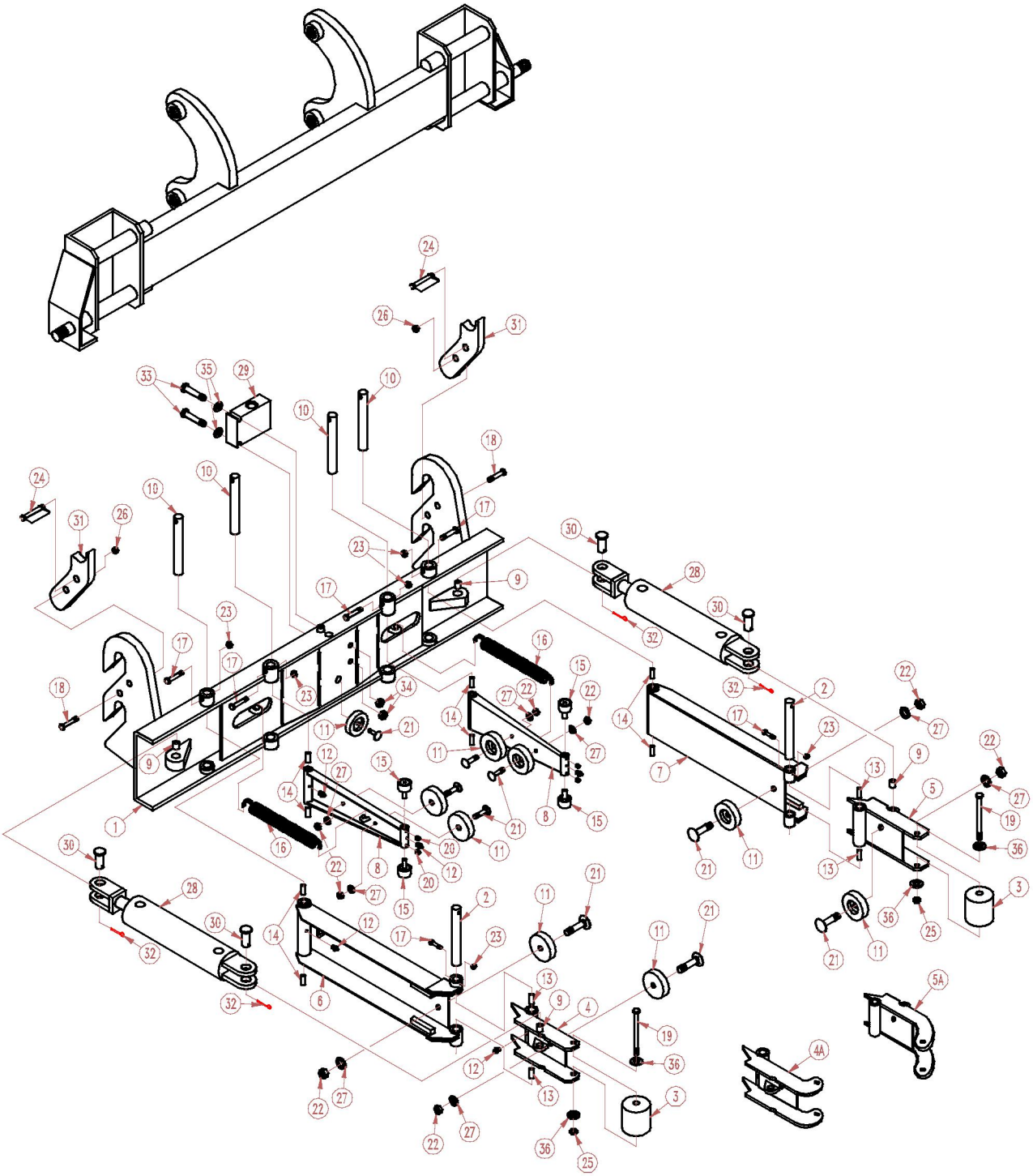

LATCH ON GRABBER

(LG300-2A PART NO. 0607-220)
(LG300-2B PART NO. 0607-223)

ITEM	QTY	P/N	DESCRIPTION
1	1	0607-221	LATCH ON BACK STRUCTURE
2	2	0607-224	DRILLED PIN
3	2	0607-108	RUBBER ROLLER
4	1	0607-238	R.H. OUTER ARM STRUCTURE (LG300-2A ONLY)
4A	1	0607-260	R.H. OUTER ARM STRUCTURE (LG300-2B ONLY)
5	1	0607-239	L.H. OUTER ARM STRUCTURE (LG300-2A ONLY)
5A	1	0607-261	L.H. OUTER ARM STRUCTURE (LG300-2B ONLY)
6	1	0607-247	R.H. MIDDLE ARM STRUCTURE
7	1	0607-248	L.H. MIDDLE ARM STRUCTURE
8	2	0607-255	INNER ARM STRUCTURE
9	4	0607-106	PRESSED FIBER BUSHING
10	4	0607-540	DRILLED PIN
11	9	0607-545	RUBBER BUMPER
12	8	0041-032	LUBE FITTING, .25-28NF
13	4	0044-296	BRONZE BUSHING
14	8	0044-297	BRONZE BUSHING
15	4	0044-533	CAM FOLLOWER, 1.63
16	2	0045-242	EXTENSION SPRING
17	6	0060-434	CAPSCREW, .38-16NC X 2.25
18	2	0060-802	CAPSCREW, .50-13NC X 2.50
19	2	0061-534	CAPSCREW, .75-10NC X 7.00
20	4	0064-634	SETSCREW, .31-18NC X .31
21	9	0064-754	ELEVATOR BOLT, .38-16NC X 1.50
22	9	0065-032	HEX NUT, .38-16NC
23	6	0065-180	HEX NUT, .38-16NC NYLOCK
24	2	0040-799	SNAPPER PIN, .38 X 2.50
25	2	0065-532	HEX NUT, .75-10NC UNI-TORQUE
26	2	0065-209	HEX NUT, .50-13NC NYLOCK
27	9	0067-034	.38 LOCKWASHER
28	2	(REF.)	HYDRAULIC CYLINDER
29	1	(REF.)	CARTRIDGE BLOCK
30	4	0040-169	CLEVIS PIN, 1.00 X 2.25
31	2	0607-162	EAR
32	4	0040-512	COTTER PIN, .19 X 2.00
33	2	0060-082	CAPSCREW, .25-20NC X 2.25
34	2	0065-164	HEX NUT, .25-20NC NYLOCK
35	2	0066-014	.25 FLATWASHER
36	4	0066-089	.75 FLATWASHER

UNIVERSAL GRABBER (UG450-1A)

(PART NO. 0607-150)

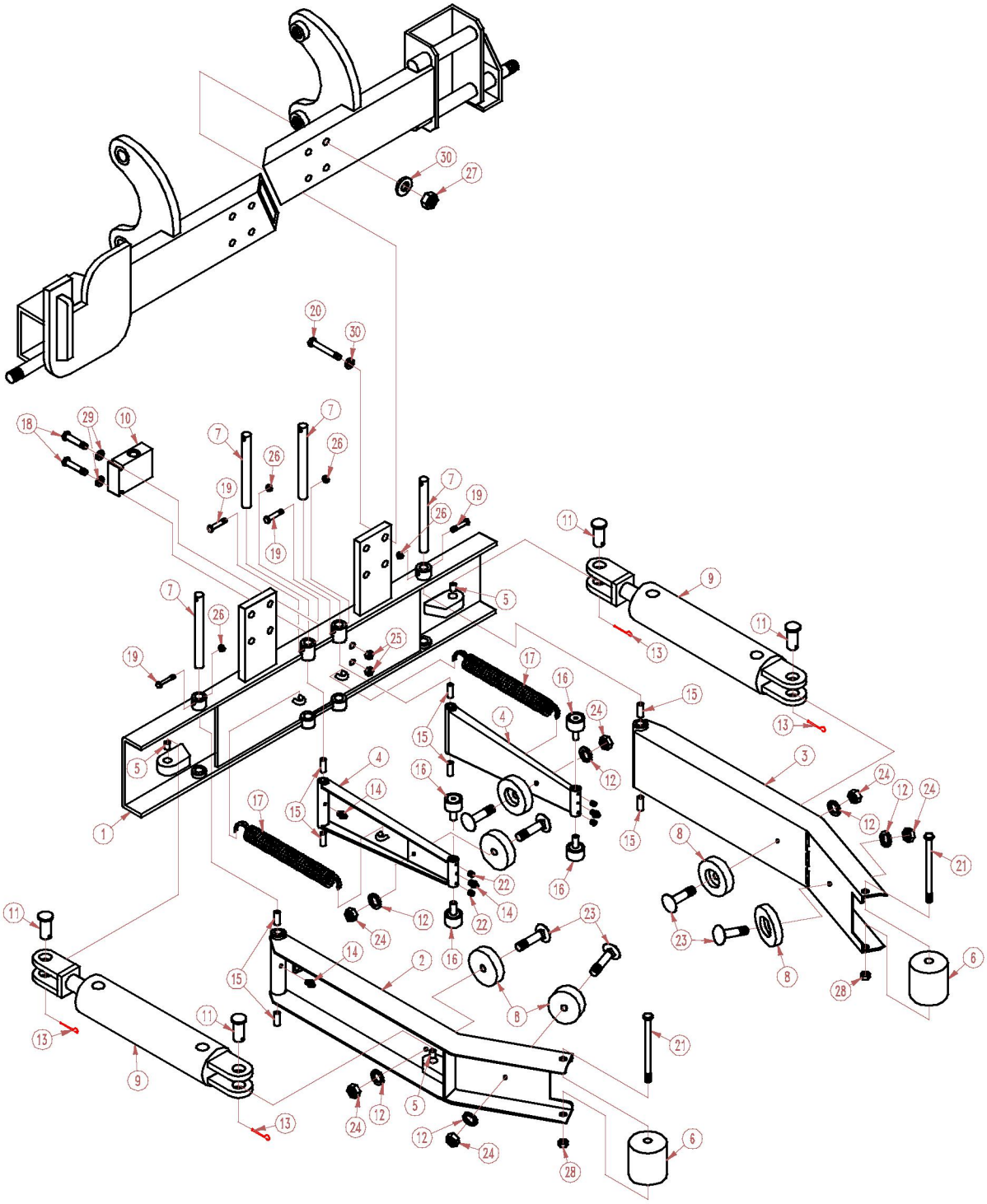

UNIVERSAL GRABBER (UG450-1A)

(PART NO. 0607-150)

ITEM	QTY	P/N	DESCRIPTION
1	1	0607-151	UNIVERSAL BACK STRUCTURE
2	1	0607-103	R.H. OUTER ARM STRUCTURE
3	1	0607-104	L.H. OUTER ARM STRUCTURE
4	2	0607-105	INNER ARM STRUCTURE
5	4	0607-106	PRESSED FIBER BUSHING
6	2	0607-108	RUBBER ROLLER
7	4	0607-540	DRILLED PIN
8	6	0607-545	RUBBER BUMPER
9	2	(REF.)	HYDRAULIC CYLINDER
10	1	(REF.)	CARTRIDGE BLOCK
11	4	0040-169	CLEVIS PIN, 1.00 X 2.25
12	6	0067-034	.38 LOCKWASHER
13	4	0040-512	COTTER PIN, .19 X 2.00
14	6	0041-032	LUBE FITTING, .25-28NF
15	8	0044-297	BRONZE BUSHING
16	4	0044-533	CAM FOLLOWER, 1.63
17	2	0045-242	EXTENSION SPRING
18	2	0060-082	CAPSCREW, .25-20NC X 2.25
19	4	0060-434	CAPSCREW, .38-16NC X 2.25
20	8	0060-869	CAPSCREW, .50-13NC X 4.00
21	2	0061-526	CAPSCREW, .75-10NC X 6.50
22	4	0064-634	SETSCREW, .31-18NC X .31
23	6	0064-754	ELEVATOR BOLT, .38-16NC X 1.50
24	6	0065-032	HEX NUT, .38-16NC
25	2	0065-164	HEX NUT, .25-20NC NYLOCK
26	6	0065-180	HEX NUT, .38-16NC NYLOCK
27	8	0065-209	HEX NUT, .50-13NC NYLOCK
28	2	0065-532	HEX NUT, .75-10NC UNI-TORQUE
29	2	0066-014	.25 FLATWASHER
30	16	0066-055	.50 FLATWASHER

TRACK MOUNT GRABBER (TG450-1A)

(PART NO. 0607-100)

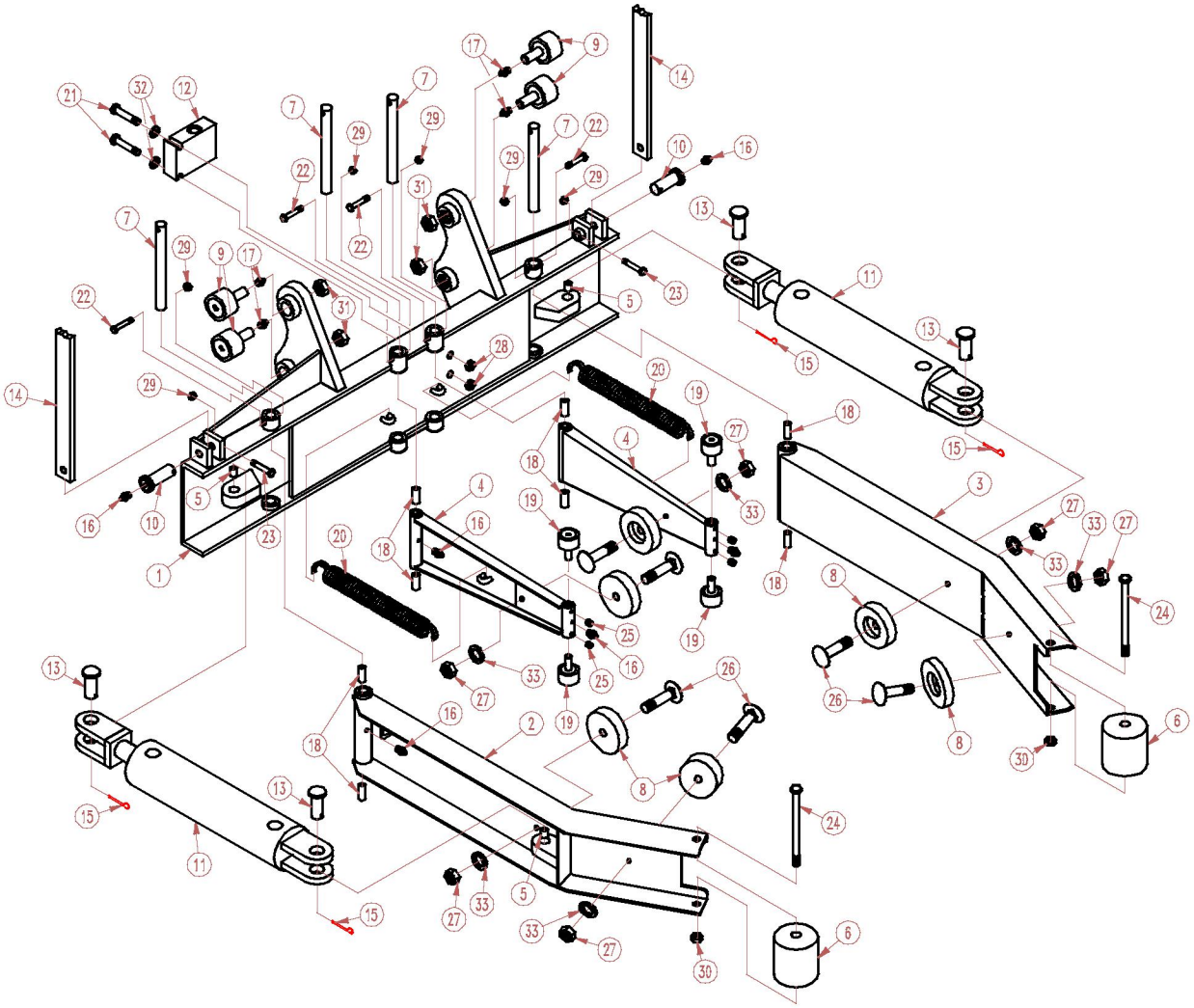

TRACK MOUNT GRABBER (TG450-1A)

(PART NO. 0607-100)

ITEM	QTY	P/N	DESCRIPTION
1	1	0607-101	TRACK MOUNT BACK STRUCTURE
2	1	0607-103	R.H. OUTER ARM STRUCTURE
3	1	0607-104	L.H. OUTER ARM STRUCTURE
4	2	0607-105	INNER ARM STRUCTURE
5	4	0607-106	PRESSED FIBER BUSHING
6	2	0607-108	RUBBER ROLLER
7	4	0607-540	DRILLED PIN
8	6	0607-545	RUBBER BUMPER
9	4	0603-054	MODIFIED CAM FOLLOWER
10	2	0603-849	PIN STRUCTURE
11	2	(REF.)	HYDRAULIC CYLINDER
12	1	(REF.)	CARTRIDGE BLOCK
13	4	0040-169	CLEVIS PIN, 1.00 X 2.25
14	2	(REF.)	LOWER ARM STRUCTURE
15	4	0040-512	COTTER PIN, .19 X 2.00
16	8	0041-032	LUBE FITTING, .25-28NF
17	4	0041-123	LUBE FITTING, .25 DRIVE
18	8	0044-297	BRONZE BUSHING
19	4	0044-533	CAM FOLLOWER, 1.63
20	2	0045-242	EXTENSION SPRING
21	2	0060-082	CAPSCREW, .25-20NC X 2.25
22	4	0060-434	CAPSCREW, .38-16NC X 2.25
23	2	0060-445	CAPSCREW, .38-16NC X 2.50
24	2	0061-526	CAPSCREW, .75-10NC X 6.50
25	4	0064-634	SETSCREW, .31-18NC X .31
26	6	0064-754	ELEVATOR BOLT, .38-16NC X 1.50
27	6	0065-032	HEX NUT, .38-16NC
28	2	0065-164	HEX NUT, .25-20NC NYLOCK
29	6	0065-180	HEX NUT, .38-16NC NYLOCK
30	2	0065-532	HEX NUT, .75-10NC UNI-TORQUE
31	4	0065-964	HEX JAM NUT, 1.25-12NF
32	2	0066-014	.25 FLATWASHER
33	6	0067-034	.38 LOCKWASHER

LATCH ON GRABBER (LG450-1A)

(PART NO. 0607-160)

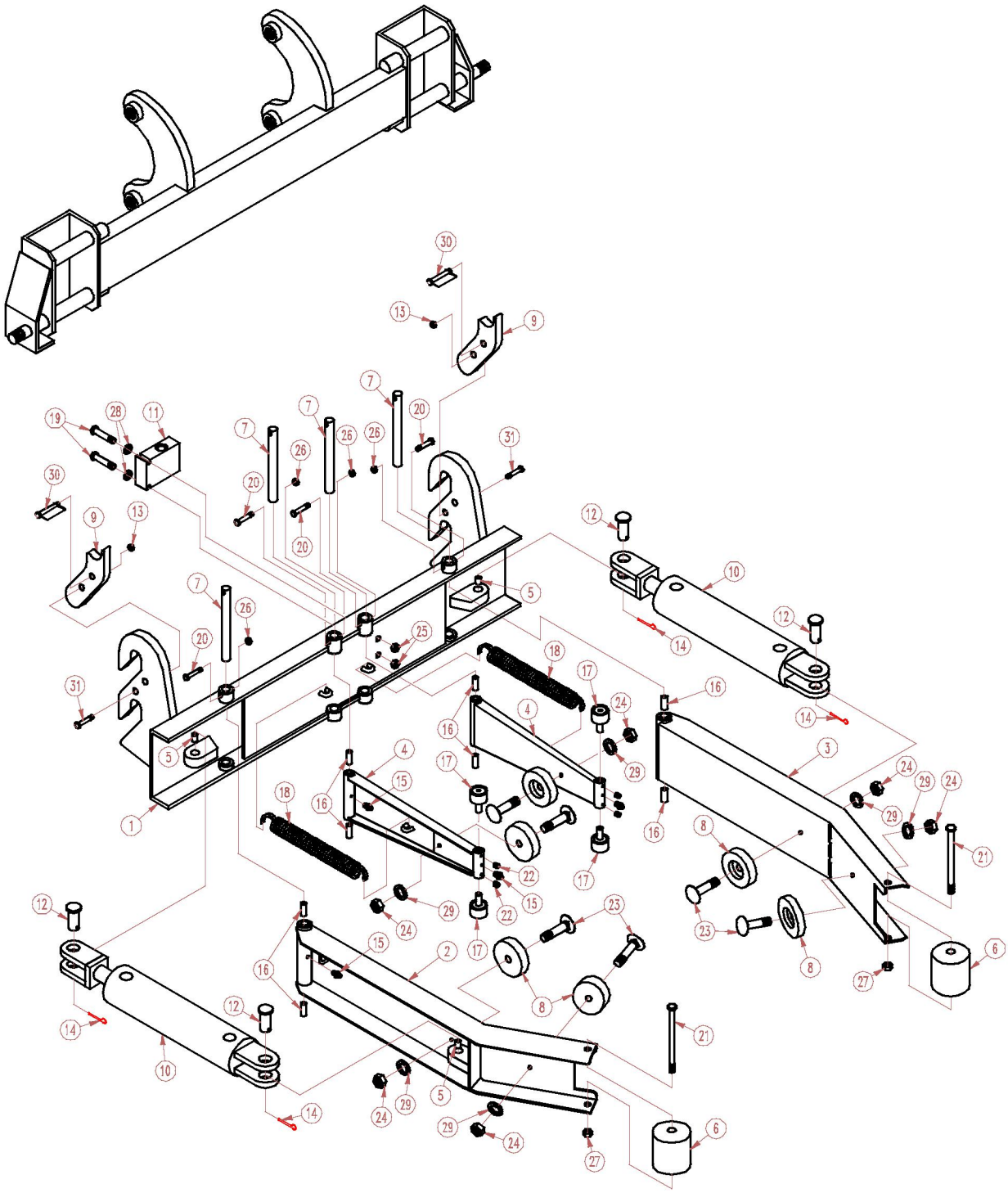

LATCH ON GRABBER (LG450-1A)

(PART NO. 0607-160)

ITEM	QTY	P/N	DESCRIPTION
1	1	0607-161	LATCH ON BACK STRUCTURE
2	1	0607-103	R.H. OUTER ARM STRUCTURE
3	1	0607-104	L.H. OUTER ARM STRUCTURE
4	2	0607-105	INNER ARM STRUCTURE
5	4	0607-106	PRESSED FIBER BUSHING
6	2	0607-108	RUBBER ROLLER
7	4	0607-540	DRILLED PIN
8	6	0607-545	RUBBER BUMPER
9	2	0607-162	EAR
10	2	(REF.)	HYDRAULIC CYLINDER
11	1	(REF.)	CARTRIDGE BLOCK
12	4	0040-169	CLEVIS PIN, 1.00 X 2.25
13	2	0065-209	HEX NUT, .50-13NC NYLOCK
14	4	0040-512	COTTER PIN, .19 X 2.00
15	6	0041-032	LUBE FITTING, .25-28NF
16	8	0044-297	BRONZE BUSHING
17	4	0044-533	CAM FOLLOWER, 1.63
18	2	0045-242	EXTENSION SPRING
19	2	0060-082	CAPSCREW, .25-20NC X 2.25
20	4	0060-434	CAPSCREW, .38-16NC X 2.25
21	2	0061-526	CAPSCREW, .75-10NC X 6.50
22	4	0064-634	SETSCREW, .31-18NC X .31
23	6	0064-754	ELEVATOR BOLT, .38-16NC X 1.50
24	6	0065-032	HEX NUT, .38-16NC
25	2	0065-164	HEX NUT, .25-20NC NYLOCK
26	4	0065-180	HEX NUT, .38-16NC NYLOCK
27	2	0065-532	HEX NUT, .75-10NC UNI-TORQUE
28	2	0066-014	.25 FLATWASHER
29	6	0067-034	.38 LOCKWASHER
30	2	0040-799	SNAPPER PIN, .38 X 2.50
31	2	0060-802	CAPSCREW, .50-13NC X 2.50

GRABBER HYDRAULICS
(_G300-2A & 2B SERIES)

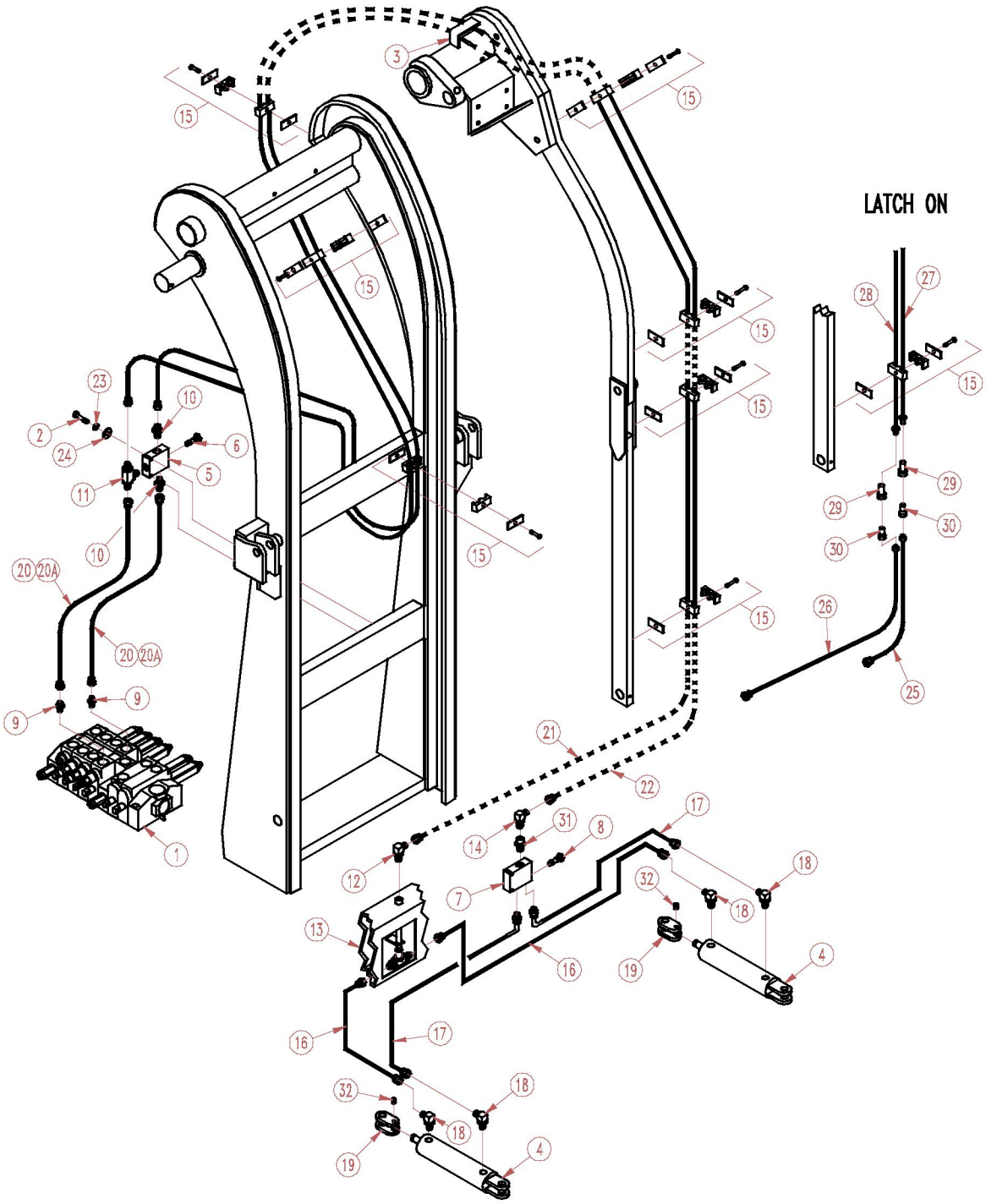

GRABBER HYDRAULICS
(_G300-2A & 2B SERIES)

ITEM	QTY	P/N	DESCRIPTION
1	1	(REF.)	VALVE
2	2	0060-074	CAPSCREW, .25-20NC X 2.00
3	1	0607-197	FORMED FLAT
4	2	0020-095	HYDRAULIC CYLINDER
5	1	0039-142	CARTRIDGE BLOCK
6	1	0039-144	CARTRIDGE
7	1	0039-148	CARTRIDGE BLOCK
8	1	0039-146	CARTRIDGE
9	2	0033-507	ADAPTER
10	2	0033-483	ADAPTER
11	1	0036-700	ADAPTER
12	1	0035-121	ADAPTER
13	1	(REF.)	GRABBER BACK STRUCTURE
14	1	0035-118	ADAPTER
15	7	0045-237	DOUBLE HOSE CLAMP
16	2	0090-026	HYDRAULIC HOSE
17	2	0090-025	HYDRAULIC HOSE
18	4	0035-116	ADAPTER
19	2	0607-275	CLEVIS STRUCTURE
20	1	0090-006	HYDRAULIC HOSE (30" REACH)
20A	1	0090-016	HYDRAULIC HOSE (48" REACH)
21	1	0090-008	HYDRAULIC HOSE
22	1	0090-007	HYDRAULIC HOSE
23	2	0067-015	.25 LOCKWASHER
24	2	0066-014	.25 FLATWASHER
* 25	1	0090-019	HYDRAULIC HOSE
* 26	1	0090-020	HYDRAULIC HOSE
* 27	1	0090-021	HYDRAULIC HOSE
* 28	1	0090-022	HYDRAULIC HOSE
* 29	2	0037-480	QUICK COUPLER, .50 FEMALE
* 30	2	0037-481	QUICK COUPLER, .50 MALE
31	1	0033-855	ADAPTER
32	2	0064-631	SETSCREW, .38-16NC X .50

*** IF UNIT IS BEING EQUIPPED WITH LATCH ON GRABBER, THE NOTED PARTS NEED TO BE SUBSTITUTED FOR ITEMS 21 & 22.**

GRABBER HYDRAULICS
(_G450-1A SERIES)

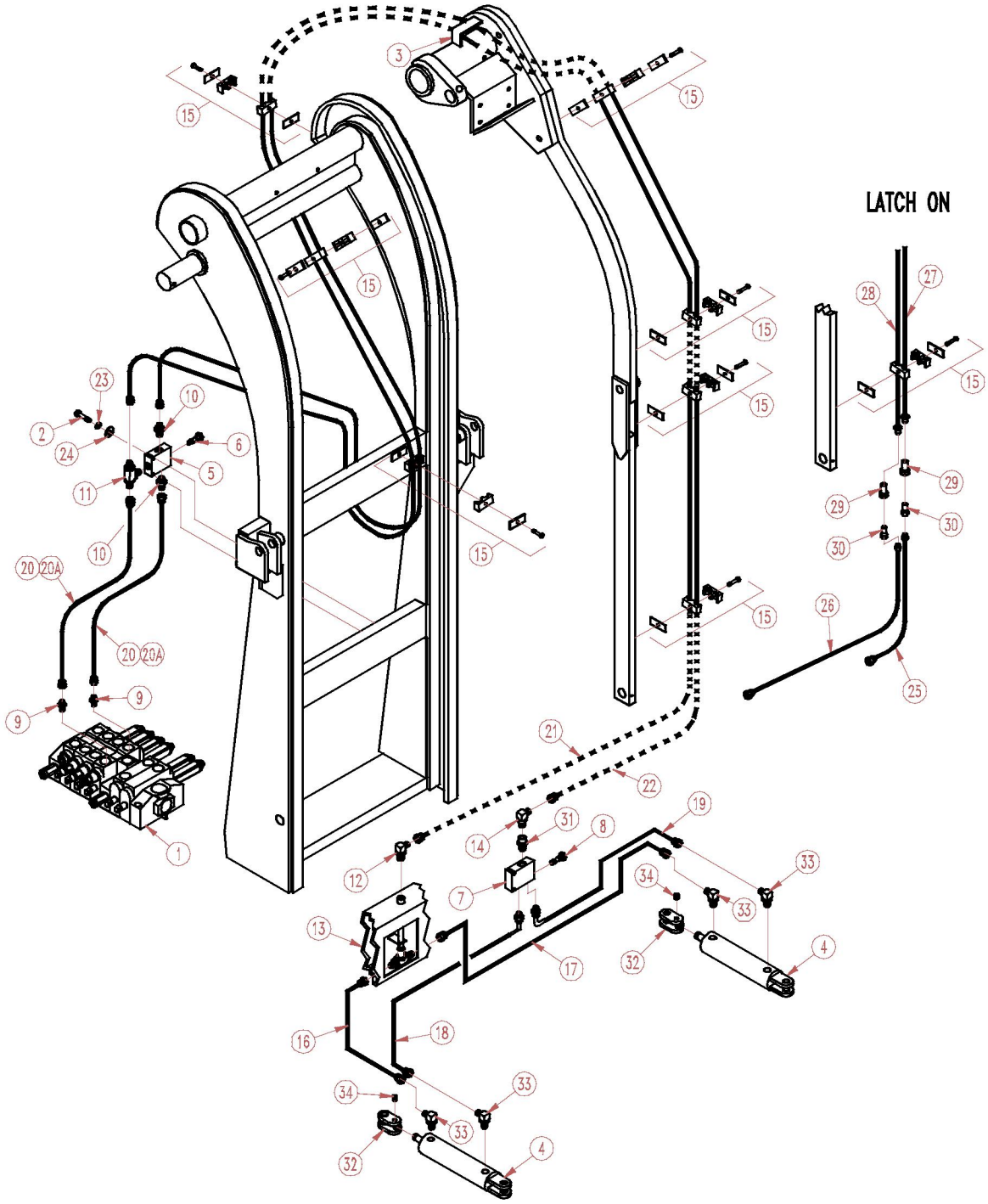

GRABBER HYDRAULICS

(_G450-1A SERIES)

ITEM	QTY	P/N	DESCRIPTION
1	1	(REF.)	VALVE
2	2	0060-074	CAPSCREW, .25-20NC X 2.00
3	1	0607-197	FORMED FLAT
4	2	0020-095	HYDRAULIC CYLINDER
5	1	0039-142	CARTRIDGE BLOCK
6	1	0039-144	CARTRIDGE
7	1	0039-148	CARTRIDGE BLOCK
8	1	0039-146	CARTRIDGE
9	2	0033-507	ADAPTER
10	2	0033-483	ADAPTER
11	1	0036-700	ADAPTER
12	1	0035-121	ADAPTER
13	1	(REF.)	GRABBER BACK STRUCTURE
14	1	0035-118	ADAPTER
15	7	0045-237	DOUBLE HOSE CLAMP
16	1	0090-027	HYDRAULIC HOSE
17	1	0090-028	HYDRAULIC HOSE
18	1	0090-030	HYDRAULIC HOSE
19	1	0090-029	HYDRAULIC HOSE
20	1	0090-006	HYDRAULIC HOSE (30" REACH)
20A	1	0090-016	HYDRAULIC HOSE (48" REACH)
21	1	0090-008	HYDRAULIC HOSE
22	1	0090-007	HYDRAULIC HOSE
23	2	0067-015	.25 LOCKWASHER
24	2	0066-014	.25 FLATWASHER
* 25	1	0090-019	HYDRAULIC HOSE
* 26	1	0090-020	HYDRAULIC HOSE
* 27	1	0090-021	HYDRAULIC HOSE
* 28	1	0090-022	HYDRAULIC HOSE
* 29	2	0037-480	QUICK COUPLER, .50 FEMALE
* 30	2	0037-481	QUICK COUPLER, .50 MALE
31	1	0033-855	ADAPTER
32	2	0607-275	CLEVIS STRUCTURE
33	4	0035-116	ADAPTER
34	2	0064-631	SETSCREW, .38-16NC X .50

*** IF UNIT IS BEING EQUIPPED WITH LATCH ON GRABBER, THE NOTED PARTS NEED TO BE SUBSTITUTED FOR ITEMS 21 & 22.**

TIPPER

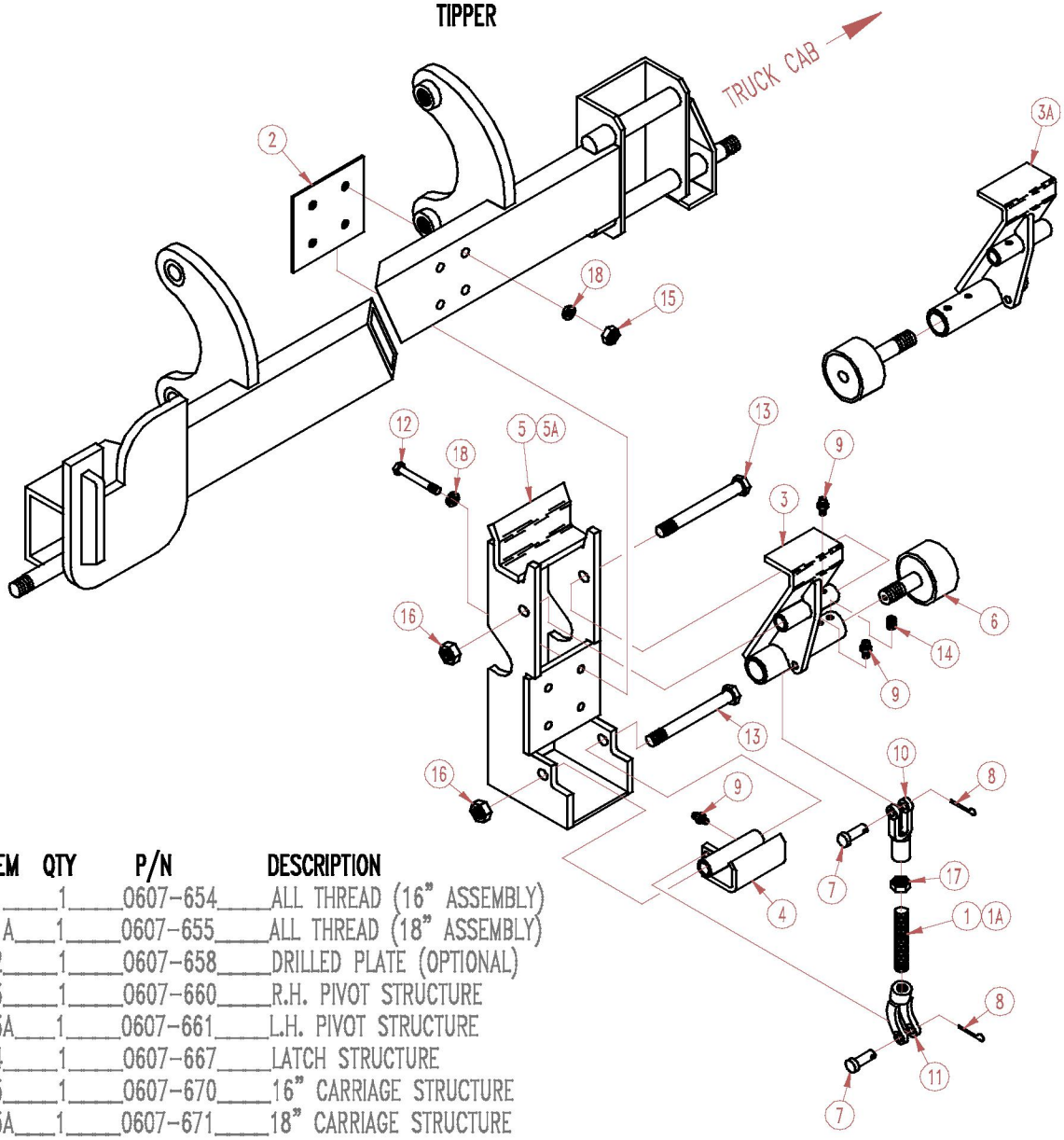

ITEM	QTY	P/N	DESCRIPTION
1	1	0607-654	ALL THREAD (16" ASSEMBLY)
1A	1	0607-655	ALL THREAD (18" ASSEMBLY)
2	1	0607-658	DRILLED PLATE (OPTIONAL)
3	1	0607-660	R.H. PIVOT STRUCTURE
3A	1	0607-661	L.H. PIVOT STRUCTURE
4	1	0607-667	LATCH STRUCTURE
5	1	0607-670	16" CARRIAGE STRUCTURE
5A	1	0607-671	18" CARRIAGE STRUCTURE
6	1	0603-054	MODIFIED CAM FOLLOWER
7	2	0040-023	CLEVIS PIN, .50 X 1.75
8	2	0040-584	COTTER PIN, .13 X 1.00
9	3	0041-032	LUBE FITTING, .25-28NF
10	1	0043-057	YOKE END
11	1	0043-100	YOKE END
12	4	0060-840	CAPSCREW, .50-13NC X 3.50
13	2	0061-545	CAPSCREW, .75-10NC X 7.50
14	1	0064-631	SETSCREW, .38-16NC X .50
15	4	0065-209	HEX NUT, .50-13NC NYLOCK
16	2	0065-233	HEX NUT, .75-10NC NYLOCK
17	1	0065-865	HEX NUT, .63-18NF
18	8	0066-055	.50 FLATWASHER

TRUXMORE LIFT ASSEMBLY

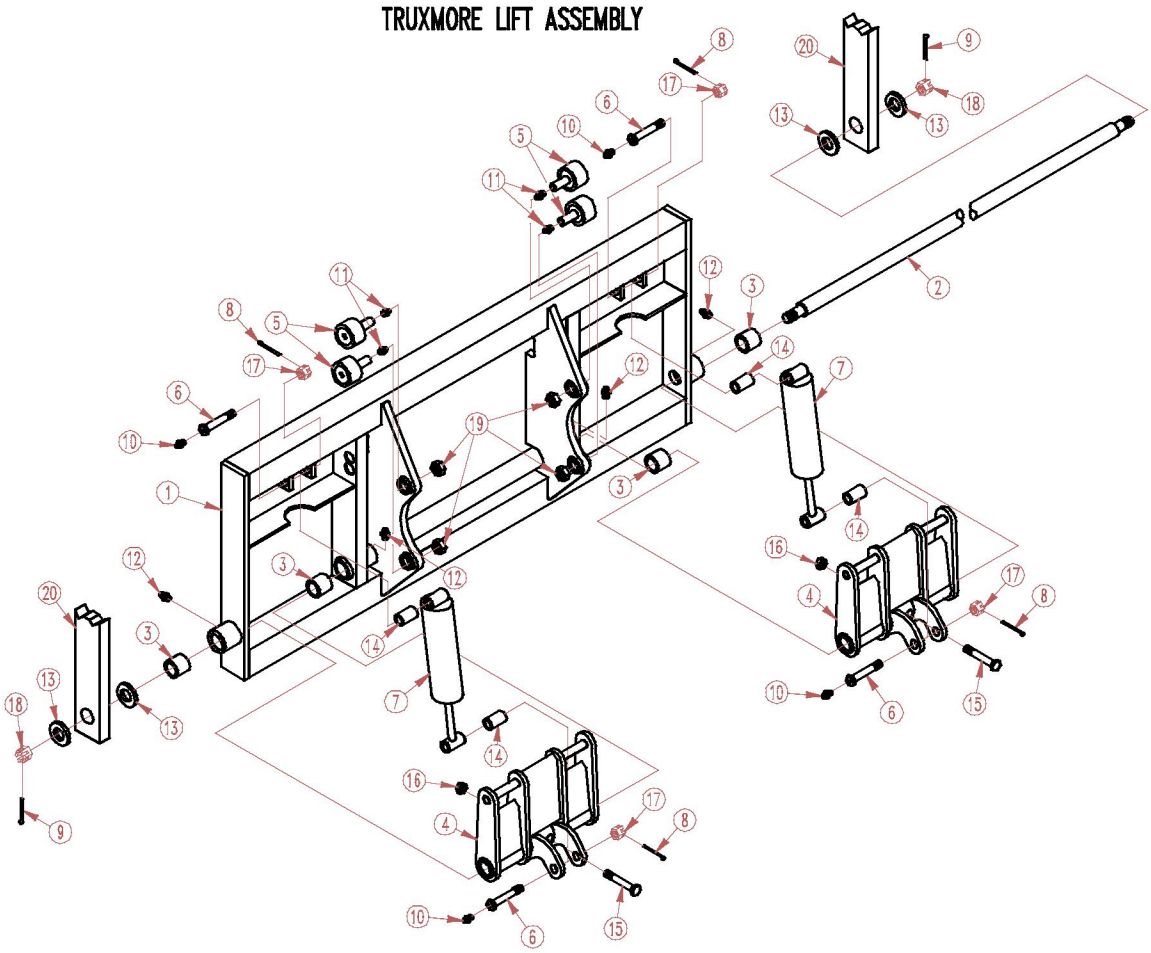

ITEM	QTY	P/N	DESCRIPTION
1	1	0607-975	TRUXMORE LIFT STRUCTURE
2	1	0607-983	SHAFT
3	4	0607-984	BRONZE BUSHING
4	2	0607-999	LINK STRUCTURE
5	4	0603-054	MODIFIED CAM FOLLOWER
6	4	0607-985	MODIFIED CAPSCREW
7	2	0020-110	HYDRAULIC CYLINDER
8	4	0040-512	COTTER PIN, .19 X 2.00
9	2	0040-518	COTTER PIN, .25 X 2.00
10	4	0041-032	LUBE FITTING, .25-28NF
11	4	0041-123	LUBE FITTING, .25 DRIVE
12	4	0041-134	LUBE FITTING, .13-27NPT
13	4	0041-289	MACHINE BUSHING
14	4	0044-297	BRONZE BUSHING
15	2	0060-840	CAPSCREW, .50-13NC X 3.50
16	2	0065-209	HEX NUT, .50-13NC NYLOCK
17	4	0065-763	HEX NUT, 1.00-14NF SLOTTED
18	2	0065-918	HEX NUT, 1.13-12NF CASTLE
19	4	0065-964	HEX JAM NUT, 1.25-12NF
20	2	(REF)	LOWER ARM STRUCTURE

SPRAY SYSTEM

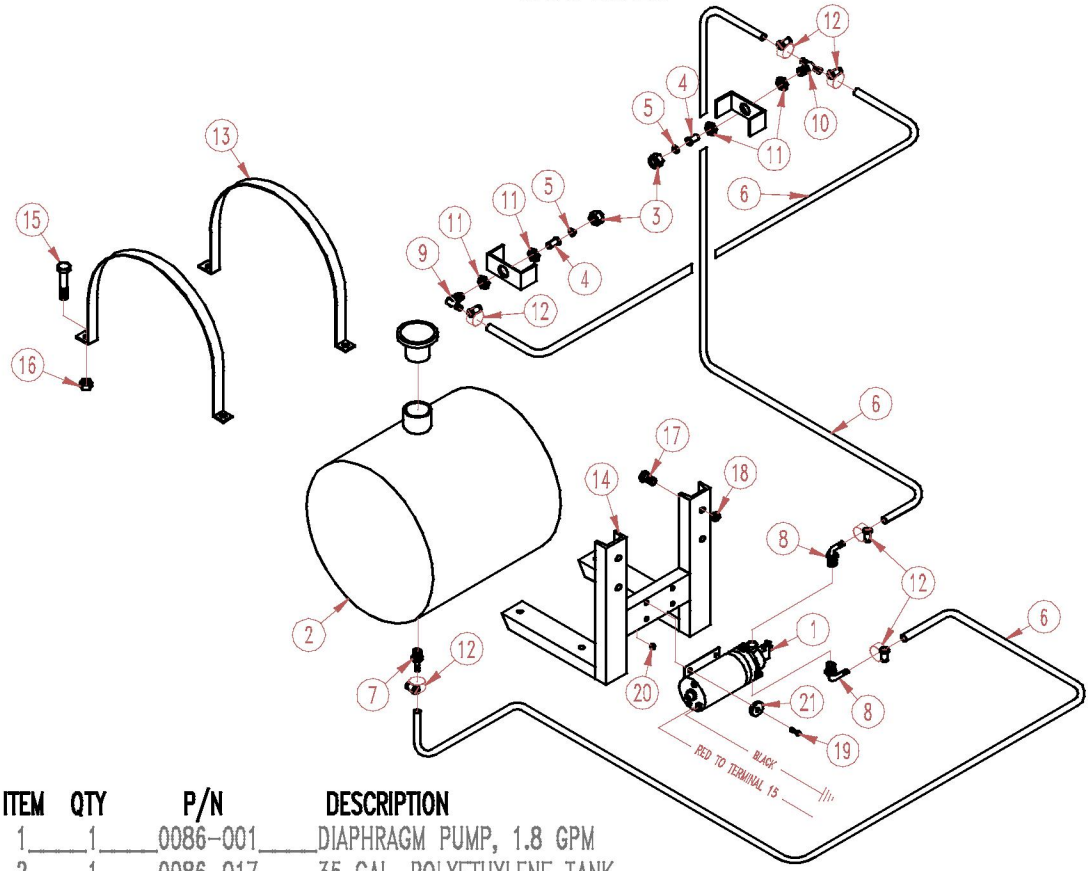

ITEM	QTY	P/N	DESCRIPTION
1	1	0086-001	DIAPHRAGM PUMP, 1.8 GPM
2	1	0086-017	35 GAL. POLYETHYLENE TANK
3	2	0086-020	NOZZLE CAP
4	2	0086-038	STRAINER
5	2	0086-049	.19 GPA SPRAY JET
6	1	0019-403	HOSE, .38 I.D. MULTI-PURPOSE X ____ (SPECIFY LENGTH)
7	1	0086-068	HOSE BARB, .38 NPTM X .38 NYLON
8	2	0086-076	90° HOSE BARB, .38 NPTM X .38 NYLON
9	1	0086-084	BRASS HOSE SHANK NOZZLE, .38 ELL
10	1	0086-095	BRASS HOSE SHANK NOZZLE, .38 TEE
11	4	0086-103	BRASS LOCKNUT
12	6	0045-018	HOSE CLAMP
13	2	0086-018	TANK MOUNT BRACKET
14	1	0606-915	SPRAY TANK MOUNT STR.
15	4	0060-407	CAPSCREW, .38-16NC X 1.50
16	4	0065-180	HEX NUT, .38-16NC NYLOCK
17	4	0060-802	CAPSCREW, .50-13NC X 2.50
18	4	0065-209	HEX NUT, .50-13NC (NYLOCK)
19	4	0064-504	SCREW, #10-24NC X 1.50 ROUND HEAD
20	4	0065-153	HEX NUT, #10-24NC NYLOCK
21	4	0066-218	.19 FENDERWASHER

AERO TARP

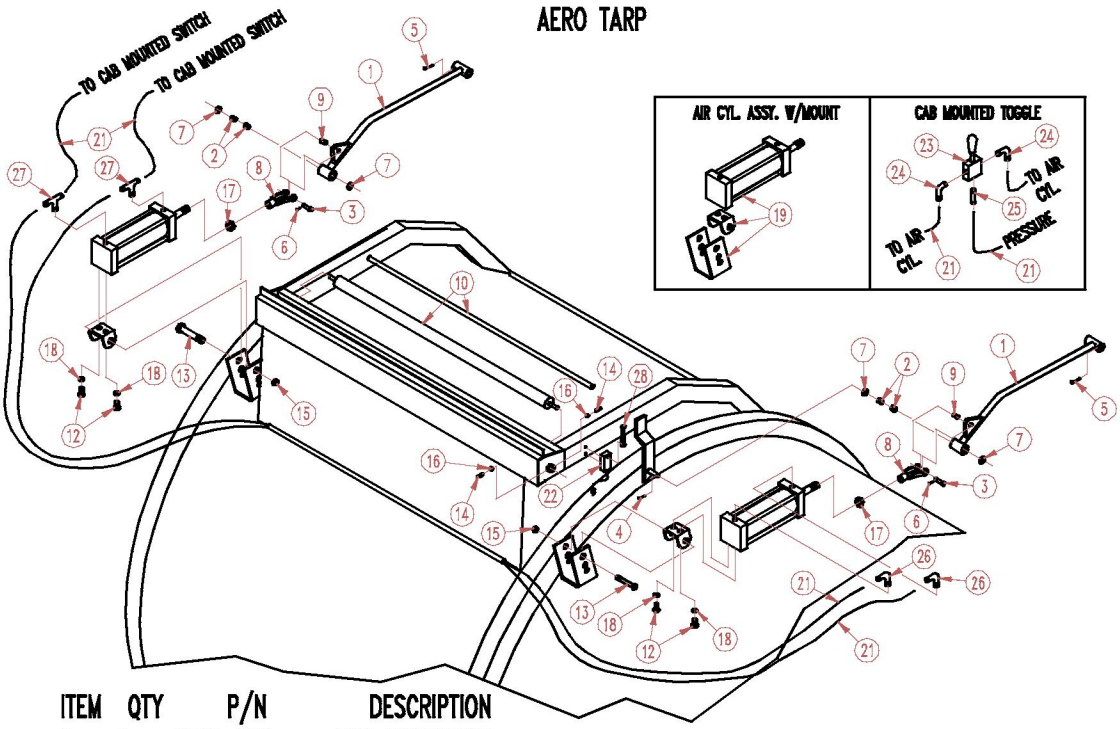

ITEM	QTY	P/N	DESCRIPTION
1	2	0606-956	ARM STRUCTURE
2	4	0607-106	PRESSED FIBER BUSHING
3	2	0040-023	CLEVIS PIN, .50 X 1.75
4	2	0040-512	COTTER PIN, .19 X 2.00
5	2	0040-518	COTTER PIN, .25 X 2.00
6	2	0040-584	COTTER PIN, .13 X 1.00
7	4	0041-271	MACHINE BUSHING, 10 GA. X 1.00 I.D.
8	2	0043-100	CLEVIS END
9	2	0044-350	BUTT JOINT BUSHING
10	1	0044-551	EASY PULL TARP KIT (LESS TARP)
11	1	0044-552	EASY PULL TARP (NOT SHOWN)
12	4	0060-741	CAPSCREW, .50-13NC X 1.00
13	2	0060-885	CAPSCREW, .50-13NC X 5.00
14	4	0064-650	SETSCREW, .25-28NF X .75
15	2	0065-209	HEX NUT, .50-13NC (NYLOCK)
16	4	0065-808	HEX NUT, .25-28NF
17	2	0065-954	HEX JAM NUT, .63-18NF
18	4	0067-056	LOCKWASHER, .50
19	2	0085-754	AIR CYL. ASSY. W/MOUNT KIT
20	2	0085-755	AIR CYL., BEARING/SEAL KIT (NOT SHOWN)
21	5	0019-467	.25 NYLON AIR TUBING, (SPECIFY LENGTH)
22	1	0055-950	LIMIT SWITCH ASSY.
23	1	0085-749	AIR TOGGLE SWITCH
24	2	0085-075	ADAPTER
25	1	0085-059	ADAPTER
26	2	0085-048	ADAPTER
27	2	0085-025	ADAPTER
28	1	0059-234	LEVER ARM