UTEM SKYTEL UTLN 41A/46A

- Exclusive 540 degree boom rotation with hourglass worm gear drive
  Provides smooth and self locking rotation with a mechanical stop
- Non-Lube bearings at all points of boom movement
- Full pressure individual lever upper controls standard
  Single stick upper control is optional
- Outer boom is high strength steel
  Inner boom is oven cured epoxy resin fiberglass
  Provides maximum strength and durability

Strength, innovation and service from UTEM

UTEM
Utility Truck Equipment MFG., L.L.C.

Utility Truck Equipment MFG, L.L.C.
P.O. Box 9
Hewitt, Texas 76643
Phone: 254-857-8204 Fax: 254-857-9253
WWW.UTEMBUCKETS.COM

UTEM SKYTEL UTLN 41A/46A

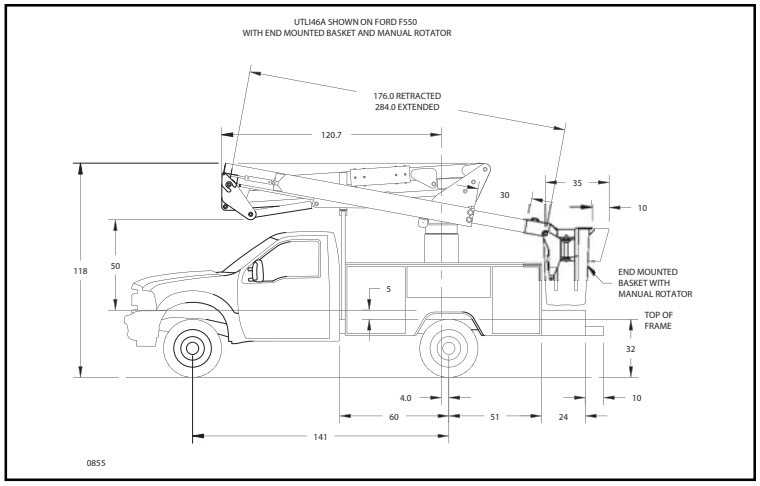

UTLN46A Dimensional Outline

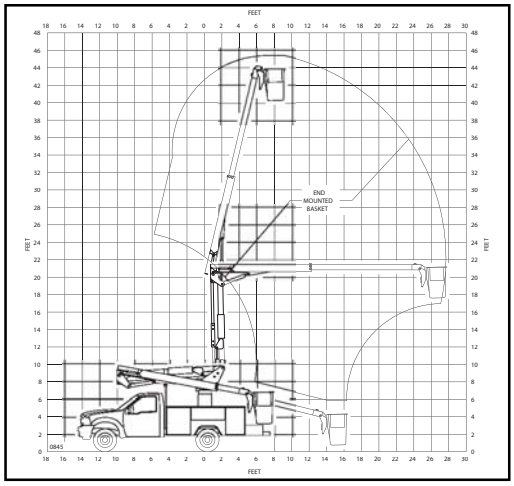

UTLN46A Operating Area Diagram

Dimensional Specifications	UTLN41A	UTLN46A
Horizontal side reach - side mount	25 ft 9 in (7.86 m)	25 ft 8 in (7.84 m)
Horizontal side reach - end mount	27 ft 9 in (8.46 m)	27 ft 8 in (8.43 m)
Height to bottom of basket*	36 ft 9 in (11.19 m)	40 ft 9 in (12.41 m)
Working height*	41 ft 9 in (12.72 m)	45 ft 9 in (13.94 m)
Stowed height*	10 ft 2 in (3.10 m)	10 ft 2 in (3.10 m)
Upper boom articulation in degrees	-14º to 77º	-14º to 77º
Lower boom articulation in degrees	-6º to 90º	-4º to 90º
Standard basket capacity	300 lbs (136 kg)	300 lbs (136 kg)
Maximum basket capacity	400 lbs (181 kg)	400 lbs (181 kg)

UTLN 41A and UTLN 46A meet or exceed ANSI A92.2 and OSHA requirements

* Based on 36 in (0.91m) chassis frame height.

Mechanical Specifications

540º Boom rotation with mechanical stop
Rotation drive is hourglass worm gear acting on a shear ball bearing
Side mount basket with hyd. leveling includes upper and lower controls
All hoses are enclosed within the booms
Boom elevation and extension by hydraulic cylinders
Boom and extension cylinders have load holding valves
Outer boom is high strength steel with screw in wear pads
Inner boom is fillament wound epoxy resin fiberglass
Lower boom consists of a parallelogram linkage
Pedestal is welded structure with reservoir mounted inside
Standard color is UTEM white enamel over an epoxy primer
Body harness with adjustable length shock absorbing lanyard included

Recommended Chassis Requirements - UTLN41A

Vehicle GVWR	15,000 lbs
Front axle GAWR	6000 lbs
Rear axle GAWR	11,000 lbs
Frame section modulus	8 in^3
RBM of frame	280,000 in lbs
Approx. weight for stability	12,200 lbs

Controls

Full pressure individual lever locking upper controls
Turret mounted full pressure lower controls
Engine stop/start provided with “HM” hydraulics
Emergency stop is provided at basket controls
Upper control override is included
Master switch in chassis cab is provided

Hydraulic Specifications

UTLN41A operating pressure	2200 PSI (155 kg/cm^2)
UTLN46A operating pressure	2500 PSI (176 kg/cm^2)
Flow rate	3 GPM (11.4 lpm)
Reservoir capacity w/ sight gauge	15 Gallons (57 l)
Suction strainer mounted in reservoir	100 Mesh
Return line filter with bypass	10 Micron

Optional Equipment

Full pressure single stick upper controls
Continuous rotation
Fiberglass baskets with steps and doors
End mount basket
Hydraulic tool outlet at basket
12VDC emergency powered lowering
110V outlet @ basket
Manual basket rotator
Hydraulic basket rotator
Outriggers for increased stability
Torsion bars for increased stability

Recommended Chassis Requirements - UTLN46A

Vehicle GVWR	17,500 lbs
Front axle GAWR	6000 lbs
Rear axle GAWR	13,500 lbs
Frame section modulus	8 in^3
RBM of frame	280,000 in lbs
Approx. weight for stability	14,200 lbs

Utility Truck Equipment MFG, L.L.C.
PO Box 9
Hewitt, TX 76643

WWW.UTEMBUCKETS.COM

UTEM specifications are subject to improvements and change without notice

Phone: 254-857-8204 Fax: 254-857-9253

January-04