DocuSign Envelope ID: F5B90603-503C-4F9B-8CE6-662DE3E1B00F

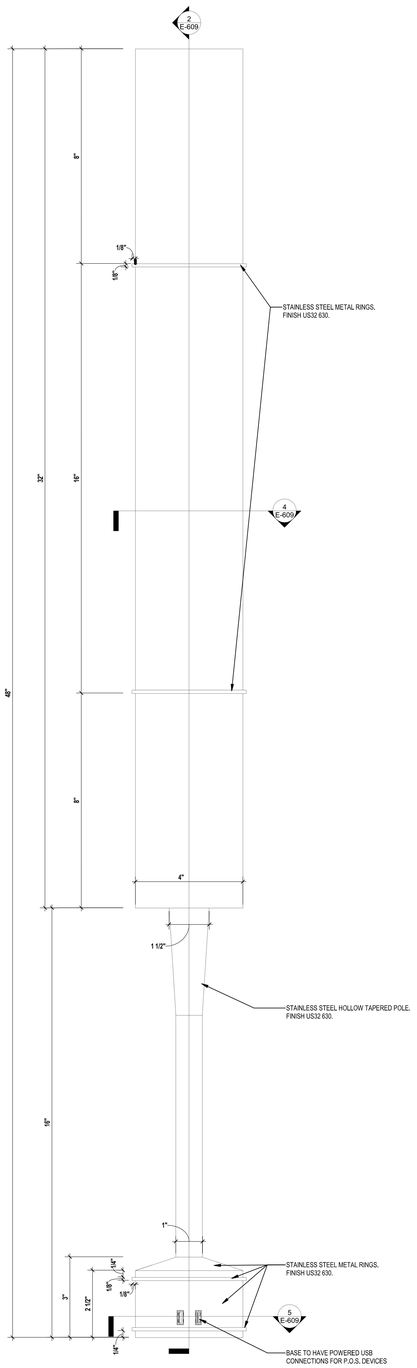

1 TYPE S9 - Elevation

6" = 1'-0"

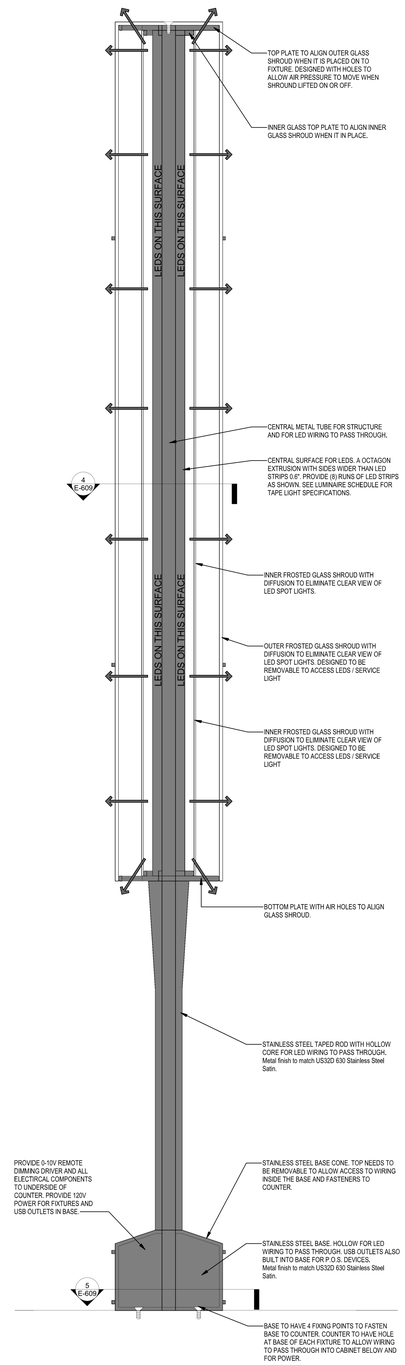

2 TYPE S9 - Long Section

6" = 1'-0"

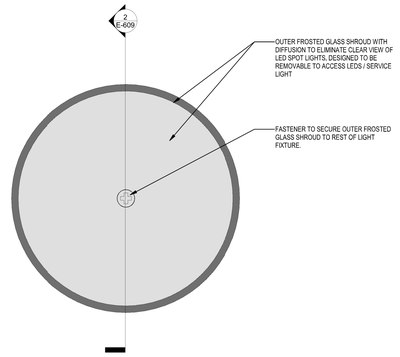

6 Top of light

12" = 1'-0"

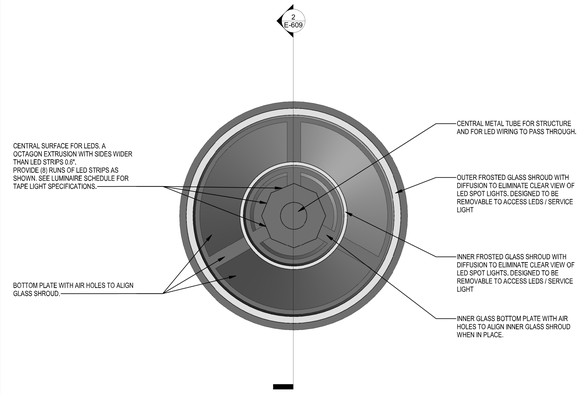

4 TYPE S9 - Section through upper glass

12" = 1'-0"

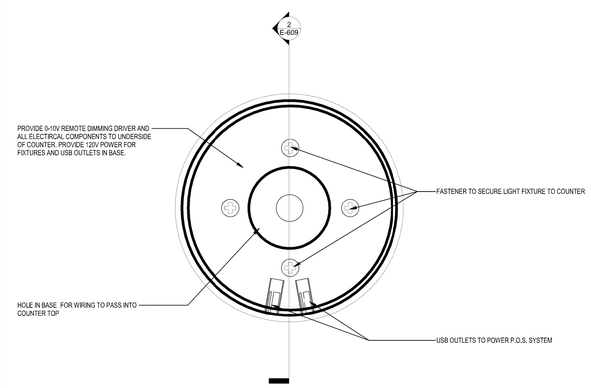

5 TYPE S9 - Section through base

12" = 1'-0"

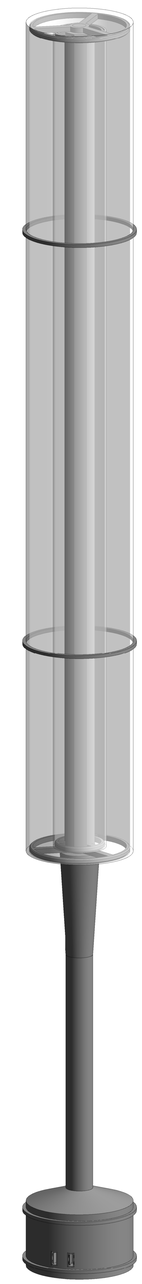

3 TYPE S9 - 3D View

TYPE S9 - PHOTOGRAPH OF ARCHITECTURAL MODEL MOCK UP

- SUBMIT FULL SHOP DRAWINGS AND FULL SCALE SAMPLES FOR ALL CUSTOM FIXTURES.
- ALL ELECTRICAL COMPONENTS ARE TO BE UL LISTED.
- FIXTURES TO BE HARDWIRED AND DIMMING SWITCH FOR ALL 5 FIXTURES.

AUBURN UNIVERSITY
Facilities Management
1161 West Samford Avenue
Auburn University, AL 36849
Phone: (334) 844-9450
Fax: (334) 844-9458
Safety is our first priority.
Think Safety. Act Safely.

No.	Revision	Date
1	BP2 FINAL DESIGN	08/31/2017

SEAL:

ALABAMA LICENSED No. 35776-E PROFESSIONAL ENGINEER DAVID CHRISTOPHER GAAR

Signed on 09/18/2017 using a Digital Signature

Newcomb & Boyd
CONSULTANTS AND ENGINEERS
Copyright © 2016
Consulting Engineering Group
303 Peachtree Center Avenue, NE
Suite 450
Atlanta, Georgia 30303-1277
T 404.214.8400
Contact: David Gaar
N&B PROJECT: 16N077

Wilson Butler Architects
70 Federal Street, Boston, MA 02110 | 617.720.7128 | www.wilsonbutler.com

The Jay and Susie Gogue Performing Arts Center
AU: 15-158 ABC: 2016559
WBA: 21515

SHEET TITLE:
ELECTRICAL DETAILS

DATE: Today

FILE NUMBER:

PROJECT NUMBER:
AU: 15-158
ABC: 2016559
WBA: 21515

SHEET NUMBER:
E-609