MYPCB

FERRET - Compact Regulated Power Supply Board - List of Parts

No.	Description	References	Value	Quantity Per PCB
1	Unpolarized capacitor	C3 C4	100nf 63v	**2**
2	Polarized capacitor	C1 C2	2200uf 25v	**2**
3	Polarized capacitor	C5 C6	220uf 25v	**2**
4	Polarized capacitor	C7	22uf 25v	**1**
5	1N4007 / RL207	D1 D2 D3 D4	1N4007	**4**
6	+15v G -15v DC Out	J3	+15v G -15v DC	**1**
7	+5v GND DC out	J2	+5v GND	**1**
8	Transformer Connector	J1	15 - 0 - 15 VAC	**1**
9	L7805	U3	L7805	**1**
10	L7815 / L7812	U1	L7815	**1**
11	L7915 / L7912	U2	L7915	**1**

MYPCB

Triple Voltage Regulated power supply

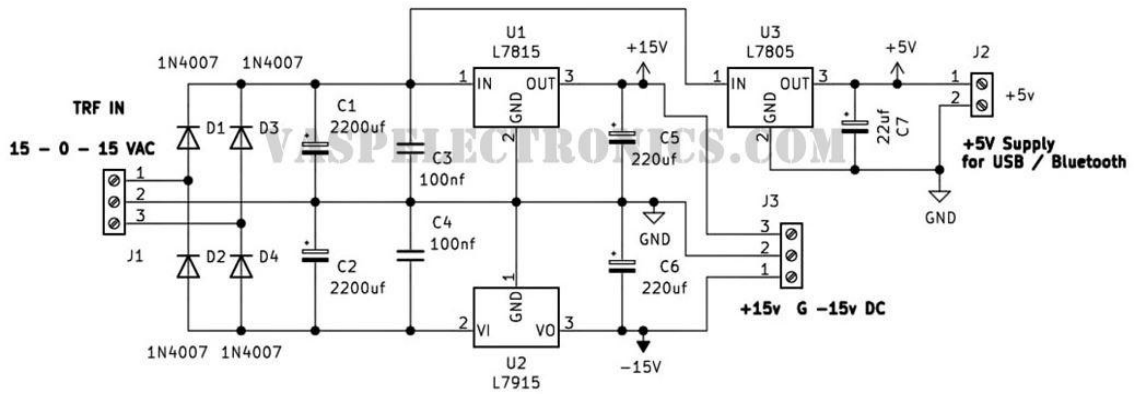

Note - Always Fix Voltage Regulators on Suitable Heatsink for Best Performance.

For more info please visit - ***vaspelectronics.com***