SCALE 2:1

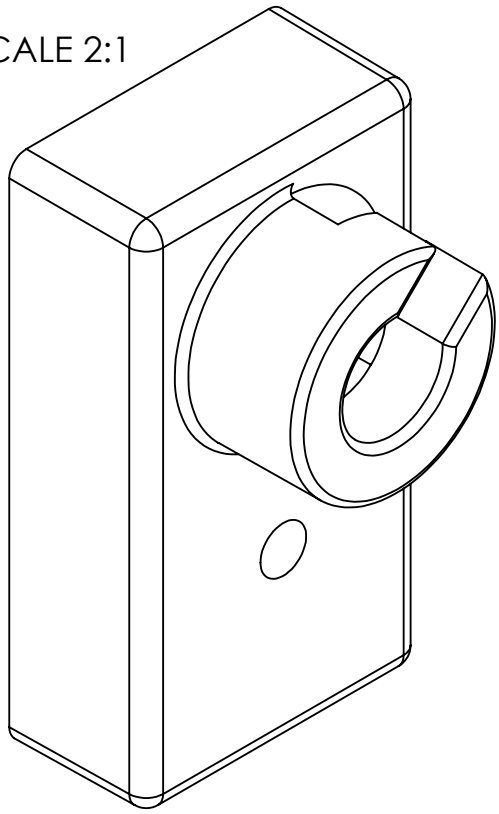

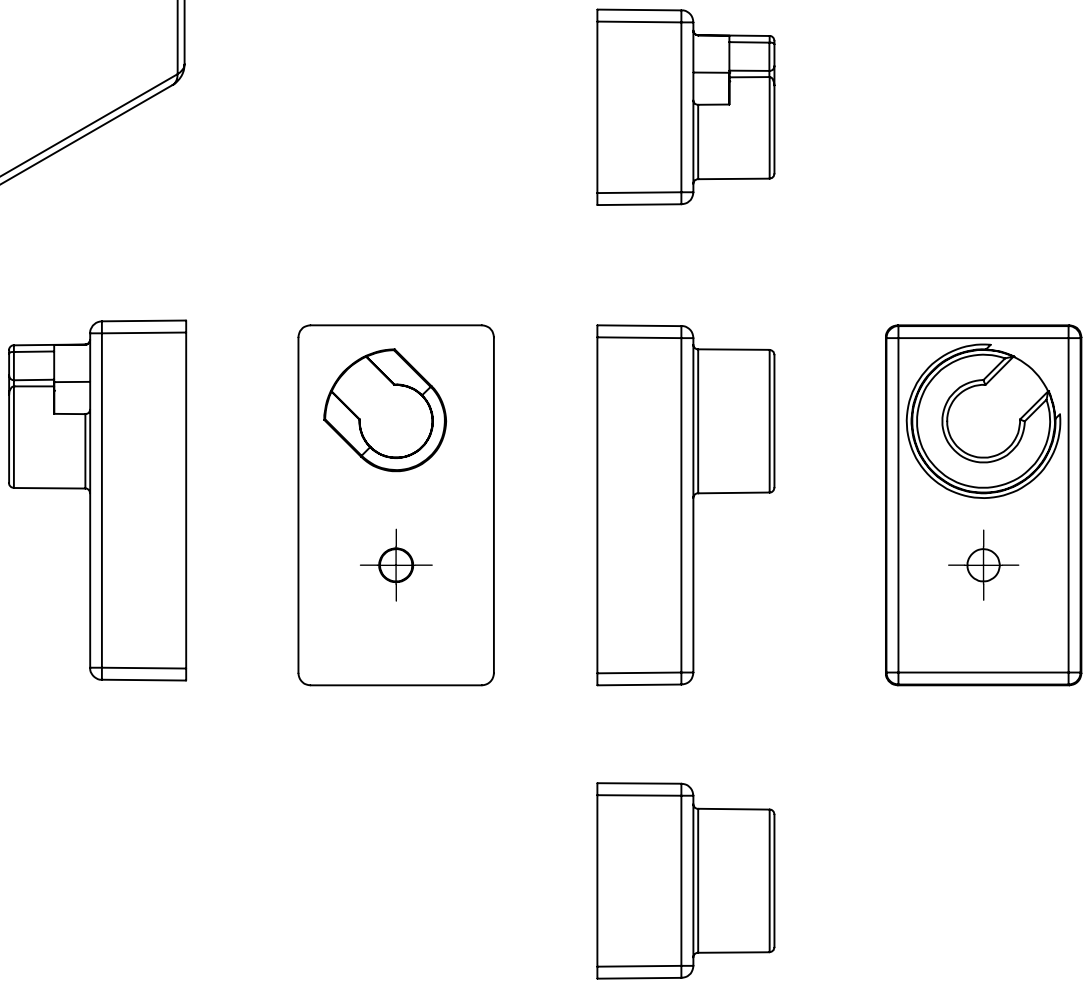

PROPRIETARY AND CONFIDENTIAL

THE INFORMATION CONTAINED IN THIS DRAWING IS THE SOLE PROPERTY OF DELTATEE ENTERPRISES LTD. ANY REPRODUCTION IN PART OR AS A WHOLE WITHOUT THE WRITTEN PERMISSION OF DELTATEE ENTERPRISES LTD. IS PROHIBITED.

DIMENSIONS ARE IN INCHES
TOLERANCES:
FRACTIONAL ±
ANGULAR: MACH ± BEND ±
TWO PLACE DECIMAL ±
THREE PLACE DECIMAL ±

MATERIAL
Nylon

FINISH

DO NOT SCALE DRAWING

	NAME	DATE
DRAWN	RW	06/24/2020
CHECKED		
ENG APPR.		
MFG APPR.		
Q.A.		

COMMENTS:

Laserseed Prowlock

Right wall bracket

SIZE	DWG. NO.	REV.
A	PROWLOCK-I-009	1.0

SCALE:1:1 WEIGHT: SHEET 1 OF 2

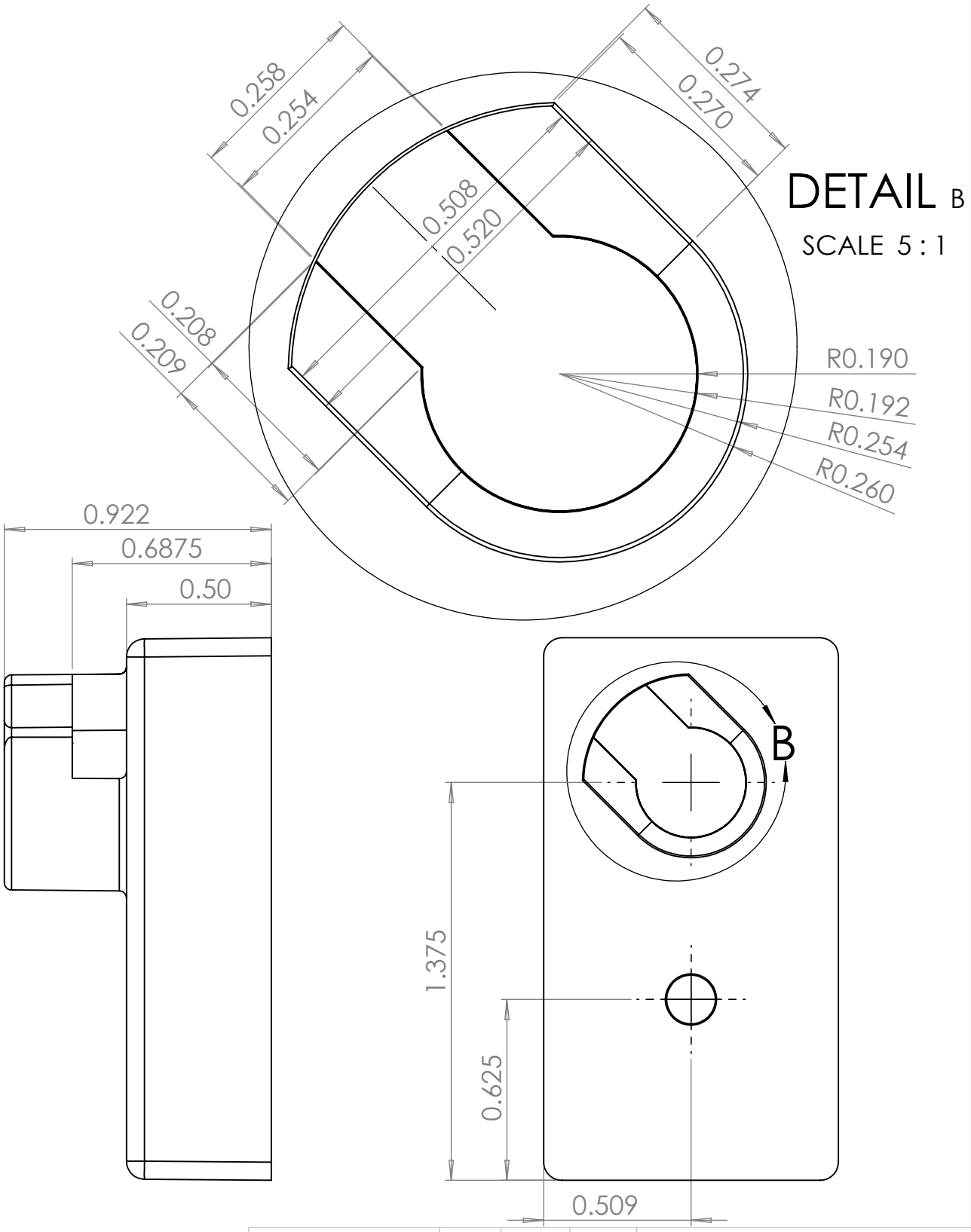

DIMENSIONS ARE IN INCHES TOLERANCES: FRACTIONAL ± ANGULAR: MACH ± BEND ± TWO PLACE DECIMAL ± THREE PLACE DECIMAL ±		
MATERIAL Nylon		
FINISH		
DO NOT SCALE DRAWING		

	NAME	DATE
DRAWN	RW	06/24/2020
CHECKED		
ENG APPR.		
MFG APPR.		
Q.A.		
COMMENTS:		

Laserseed Prowlock

Right wall bracket

SIZE	DWG. NO.	REV.
A	PROWLOCK-I-009	1.0
SCALE:2:1	WEIGHT:	SHEET 2 OF 2

PROPRIETARY AND CONFIDENTIAL

THE INFORMATION CONTAINED IN THIS DRAWING IS THE SOLE PROPERTY OF DELTATEE ENTERPRISES LTD. ANY REPRODUCTION IN PART OR AS A WHOLE WITHOUT THE WRITTEN PERMISSION OF DELTATEE ENTERPRISES LTD. IS PROHIBITED.