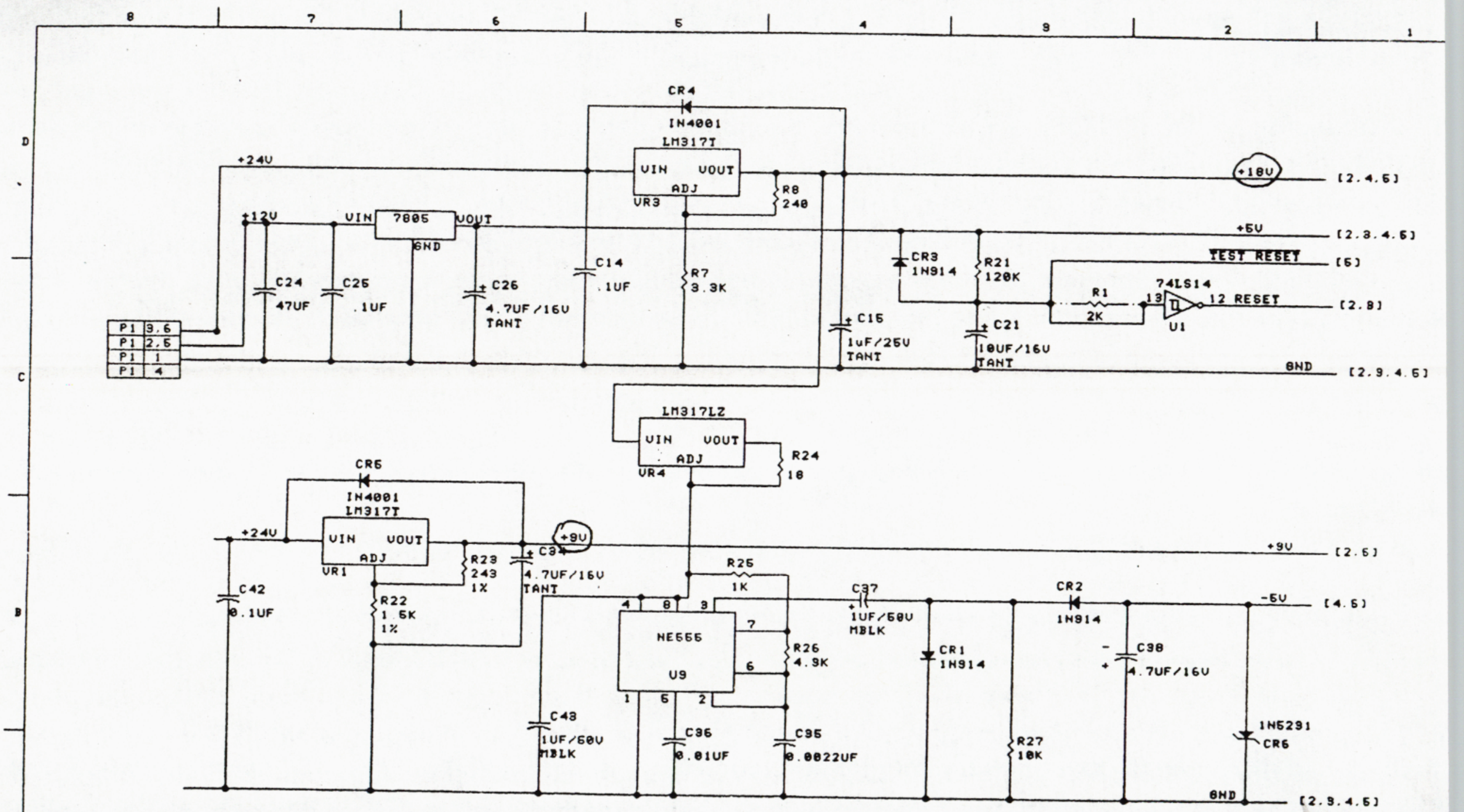

NOTES

1. IF R1 IS INSTALLED THEN THE TRACE ON CIRCUIT SIDE OF BOARD MUST BE CUT BETWEEN SOLDER PADS OF R1 (SEE NOTE ON ASSEMBLY DWG. FOR EXACT PLACE OF CUT)

MAR 28 1984

ANDROBOT, INC.

TITLE TOPO II COMMUNICATION B
POWER SUPPLY & RESET

SIZE	CODE	NUMBER
B		11-010281-001

DATE 12/20/89 SHEET 6

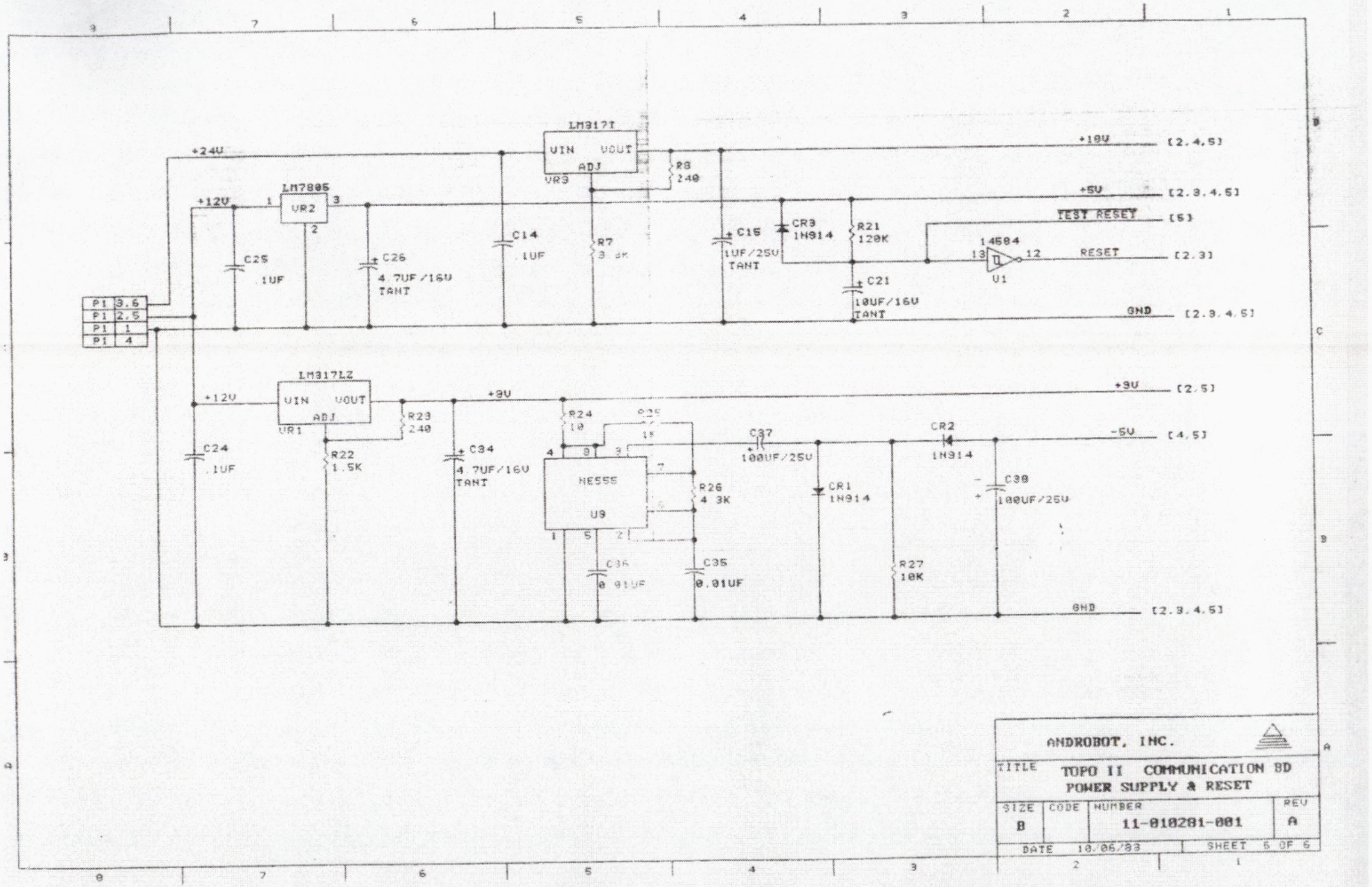

ANDROBOT, INC.

TITLE	TOPO II COMMUNICATION BD POWER SUPPLY & RESET		
SIZE B	CODE	NUMBER 11-010281-001	REV A
DATE 10/06/83		SHEET 6 OF 6	