#797

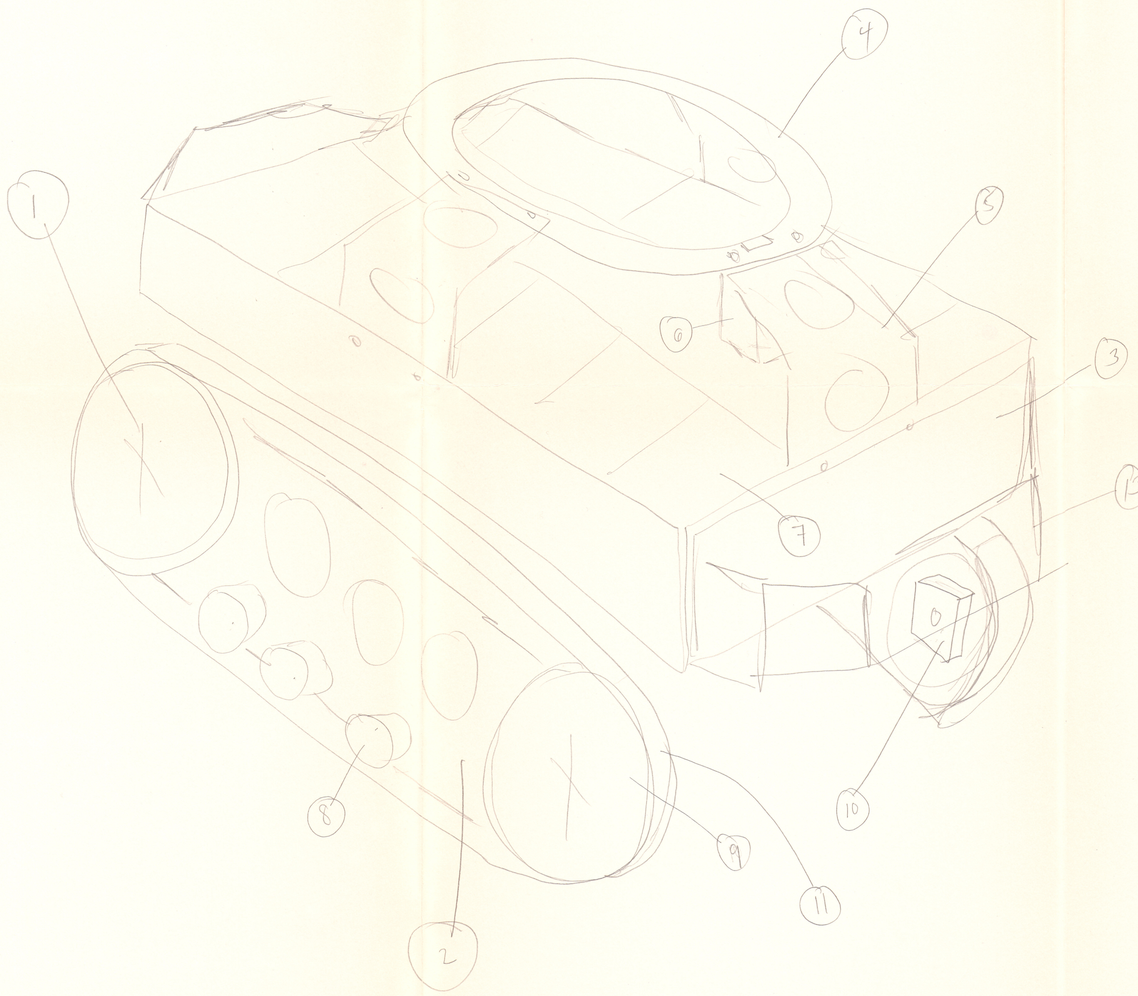

ITEM	DESCRIPTION	QUAN	TOTAL #
1	TRACK MOTORS	2	50
2	TRACK BRACKETS	2	16
3	MAIN FRAME	1	16
4	MT RING	1	8
5	TRANSITION BRACKETS	4	20
6	CHARGER - CONNECTOR	1	20
7	BATTERIES	4	34
8	BOGGIES	6	12
9	KAY WHEELS	4	1
10	IDLER ASSEMBLIES	2	16
11	TREADS	2	20
12	ENCODERS	2	30
13	ADAPTERS ENDS	2	12
14	BUMPERS (CONT. ETC, SWITCHES)	1	25
15	SHROUD (PLASTIC)	1	20
16	P. C. CARDS	1	50
17	HARNESSES	?	15
18	HARDWARE	?	20
19	PACKAGING/FOAM/ETC	?	3
20	MANUAL	1	5
21	MISC ADD-ONS	1	50
22	ASS'Y TIME/CHK-OUT	1/2 HR	443
			17
			460

15?

35?

393

17

410 × 3 = 1230

380?

× 3 1380

ME: 2 MO.
EE: 2 MO