PROJECT NAME
PROJECT ADDRESS
PROJECT CITY, STATE ZIP CODE

DEVICE LEGEND						
SYMBOL	QTY	MANUFACTURER	PART NO	DESCRIPTION	SIZE	MOUNTING
FACU	1	NAPCO	GEMC-FW-32KT	32 POINT GEM-C FIREWOLF™ 24V COMMERCIAL FIRE SYSTEM KIT		
	1	NAPCO	GEMC-32MB	ASSEMBLY MAIN BOARD		
	1	NAPCO	GEMC-FW-SLC	ADDRESSABLE SLC FIRE MODULE		
NAC	1	ALTRONIX	AL802ULADA	8-AMP, 24-VOLT POWER SUPPLY		
	1	ALTRONIX	AL802ULADA MAIN BOARD	FIRE ALARM POWER SUPPLY MAIN BOARD		
FAA	2	NAPCO	GEMC-FK1	LCD FIRE RED ANNUNCIATOR		
VS	1	GENERIC	VALVE TAMPER SUPERVISORY SWITCH		PROVIDED BY OTHERS	PROVIDED BY SPRINKLER CONTRACTOR
1 F	10	NAPCO	FWC-FSLC-PULL	ADDRESSABLE SLC FIRE PULL STATION		
AIM 2	3	NAPCO	FWC-FSLC-EZM2	ADDRESSABLE SLC 2-ZONE CONVENTIONAL EXPANSION MODULE. USES ONE ADDRESS ON SLC LOOP, BUT YIELDS 2 INDEPENT CONTACT MONITORING CIRCUITS, FOR PULL STATIONS, WATER FLOW AND OTHER DRY CONTACT ALARM INITIATING DEVICES.		
S CO	4	SYSTEM SENSOR	COSMO-4W	12/24 VOLT, 4-WIRE, SYSTEM-CONNECTED, COMBINATION CARBON MONOXIDE/SMOKE DETECTOR WITH REALTEST TECHNOLOGY		
S	2	NAPCO	FWC-FSLC-SMK W/FWC-FSLC-SMK6B	ADDRESSABLE ANALOG SLC SMOKE, PHOTOELECTRIC, HEAD**		
WF	1	GENERIC	WATERFLOW SWITCH		PROVIDED BY OTHERS	PROVIDED BY SPRINKLER CONTRACTOR
	24	SYSTEM SENSOR	P2RL	2-WIRE, HORN STROBE, RED		
	7	SYSTEM SENSOR	SRL	STROBE, RED		

CABLE AND WIRE LEGEND					
LABEL	PART NO	AWG	RESISTANCE (Ω/KFT)	DESCRIPTION	TOTAL LENGTH
485	18/2 FPLP/R (RS-485)	18	7.77	2 COND. SOLID COPPER FPLP/R ANALOG UNSHIELDED	284'
A	18/2 FPLP/R (SLC)	18	7.77	2 COND. SOLID COPPER FPLP/R ADDRESSABLE UNSHIELDED	805'
P	14/2 FPLP/R (AUX)	14	3.07	2 COND. SOLID COPPER FPLP/R UNSHIELDED	425'
V	14/2 FPLP/R (NAC)	14	3.07	2 COND. SOLID COPPER FPLP/R ANALOG UNSHIELDED	1140'
Z	18/2 FPLP/R (IDC)	18	7.77	2 COND. SOLID COPPER FPLP/R ANALOG UNSHIELDED	49'

GENERAL SYSTEM NOTES

1. NEW FACP TO BE INSTALLED & SHALL BE MONITORED 24/7 BY CENTRAL STATION.
2. ALL NEW SPRINKLER SWITCHES TO BE MONITORED.
3. ALL STROBES SHALL BE SYNCHRONIZED.
4. AUDIO/VISUAL DEVICES WILL MEET A MINIMUM 15dB ABOVE AMBIENT SOUND LEVELS.

FIRE ALARM GENERAL NOTES

1. THE FIRE ALARM SYSTEMS ARE A PERFORMANCE-BASED INSTALLATION/RENOVATION AND THE CONTRACTOR IS RESPONSIBLE FOR VERIFYING ALL QUANTITIES AND ASPECTS OF THE PROJECT IN ORDER TO HAVE A SYSTEM THAT CONFORMS TO:
   1.1.NFPA 72-2019
   1.2.NFPA 101-2018
   1.3.IFC-2018
   1.4.IBC-2018
   1.5.GAC 120-3-20A
2. ALL WORK SHALL CONFORM TO THE GENERAL ELECTRICAL NOTES, THE SPECIFICATIONS AND ALL NOTES HEREIN.
3. ANY MODIFICATIONS TO THE FIRE ALARM DESIGN SHALL BE DOCUMENTED BY A MINIMUM NICET LEVEL 3 CERTIFIED PROFESSIONAL
4. USE PANEL KNOCKOUTS THAT ARE AVAILABLE ON PANEL BOXES. DO NOT ENTER PANELS AT BATTERY LOCATIONS.
5. PROVIDE SURGE PROTECTIVE DEVICE FOR EACH POWER CIRCUIT SERVING FIRE ALARM SYSTEM COMPONENTS.
6. SIGNAL LINE CIRCUITS AND NOTIFICATION APPLIANCE CIRCUITS SHALL BE CLASS B (NFPA 72).
   6.1.WIRING SHALL BE IN ACCORDANCE WITH CONTRACT DOCUMENTATION AND SPECIFICATIONS.
   6.2.ALL SPLICES SHALL MADE AT TERMINAL STRIPS. WIRE NUTS ARE NOT ACCEPTABLE. ADD TERMINAL JUNCTION BOXES AS NEEDED.
7. RACEWAY SHALL:
   7.1.BE 3/4 " MINIMUM ELECTRICAL METALLIC TUBING (EMT).
   7.2.FOR 120 VOLT POWER CONDUCTORS SHALL CONFORM TO THE GENERAL ELECTRICAL NOTES.
8. PROVIDE EXTRA DEEP OUTLET BOXES FOR ANNUNCIATING DEVICES.
9. FIRESTOP FIRE-RATED WALL PENETRATIONS TO MAINTAIN FIRE AND SMOKE RATINGS.
10. LABEL CONDUCTORS AND CABLE IN CONTROL PANELS, JUNCTION BOXES, PULL BOXES, AND WIRING TROUGHS.
    10.1.ALL IDENTIFICATION SHALL CONFORM TO THE FIRE ALARM DEVICE NOMENCLATURE ON THIS SHEET.

SYSTEM OUTPUTS

SYSTEM INPUTS	CONTROL PANEL ANNUNCIATION								OUTPUT SIGNALS & FUNCTIONS							
	ACTIVATE ALARM SIGNAL INDICATOR	ACTIVATE AUDIBLE ALARM SIGNAL	ACTIVATE SUPERVISORY SIGNAL INDICATOR	ACTIVATE AUDIBLE SUPERVISORY SIGNAL	ACTIVATE TROUBLE SIGNAL INDICATOR	ACTIVATE AUDIBLE TROUBLE SIGNAL	DISPLAY CHANGE OF STATES ON FACP / FAA DISPLAY	TRANSMIT ALARM SIGNAL TO MONITORING STATION	TRANSMIT SUPERVISORY SIGNAL TO MONITORING STATION	TRANSMIT TROUBLE SIGNAL TO MONITORING STATION	ACTIVATE AUDIBLE SIGNALING DEVICES	ACTIVATE VISUAL INDICATING DEVICES	SHUTDOWN HVAC UNITS			
1 PULL STATIONS	●	●					●		●			●	●			
2 SMOKE DETECTORS	●	●					●		●			●	●			
3 WATERFLOW SWITCH	●	●					●		●			●	●			
4 TAMPER SWITCH			●	●			●			●						
5 DUCT SMOKE DETECTOR			●	●			●			●				●		
6 PANEL TROUBLE					●	●	●				●					
7 OPEN CIRCUIT					●	●	●				●					
8 GROUND FAULT					●	●	●				●					

DRAWING LEGEND

FA0	COVER SHEET, LEGENDS & INPUT/OUTPUT MATRIX
FA1	SHOWROOM FIRE PLAN
FA2	SERVICE FIRE PLAN
FA3	BATTERY CALCULATIONS & RISER DIAGRAM

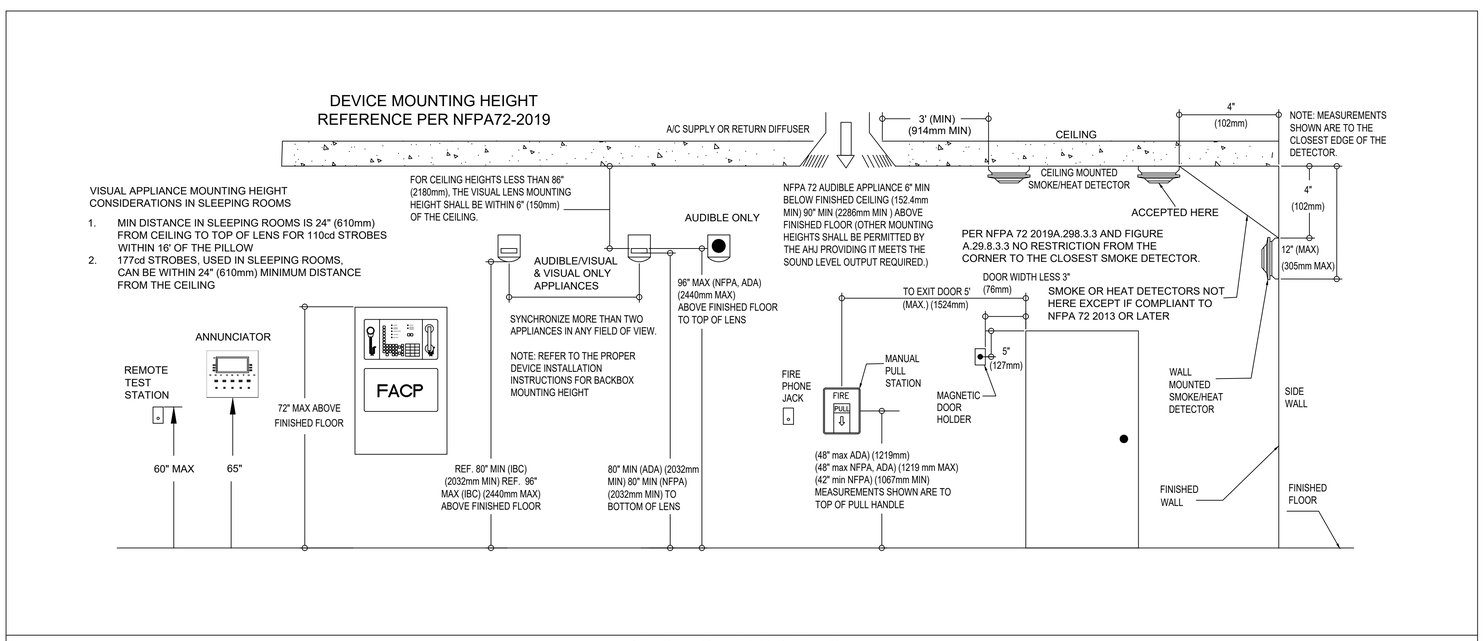

DEVICE MOUNTING DETAILS

REVISIONS DESCRIPTION

ALL	UPDATES TO DESIGN AND DEVICES LOCATIONS PER GC REQUESTS.
1	UPDATE QTY OF PULL STATIONS AND LOCATIONS OF DEVICES IN SERVICE CENTER LOBBY PER GC REQUEST.

YOUR LOGO INSERTED HERE

Number	DESCRIPTION	DATE	APPR.

REVISION

Date: 12/22/2022
Scale:
Project Number:

Designed by: ALERT
Drawn by: ALERT
Approved By:

YOUR COMPANY INFO

YOUR CONTACT AND CREDENTIALS

PROJECT INFO AND ADDRESS

SHEET REFERENCE NUMBER:
1
TOTAL SHEETS
FA0

A B C D

5 4 3 2 1

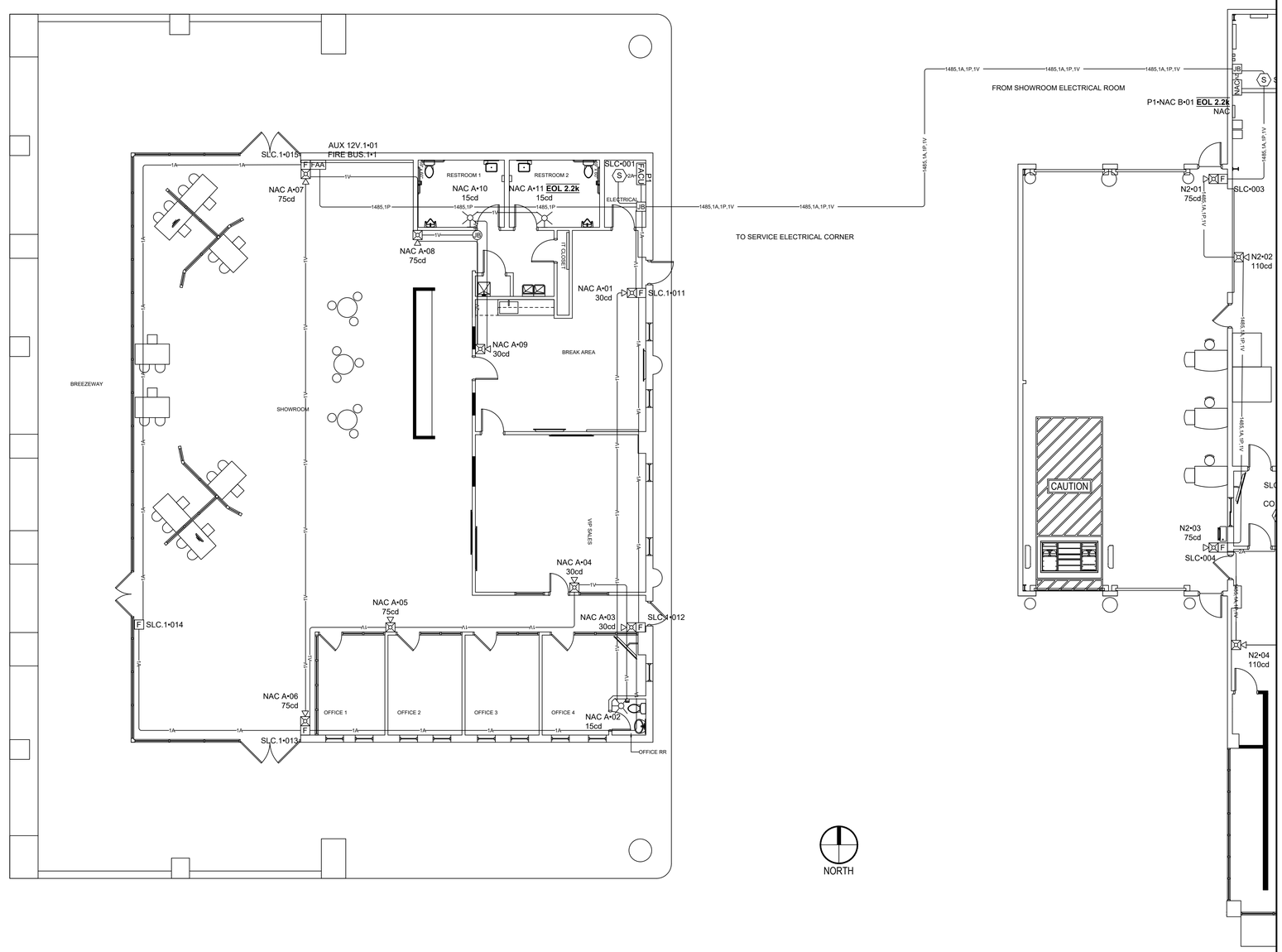

1 SHOWROOM

Scale: 1/8" = 1'-0"

YOUR LOGO INSERTED HERE

Number	DESCRIPTION	DATE:	APPR:
REVISION			

Date: 12/22/2022

Scale:

Project Number:

Designed by: ALERT

Drawn by: ALERT

Approved By:

YOUR COMPANY INFO

YOUR CONTACT AND CREDENTIALS

PROJECT INFO AND ADDRESS

SHEET REFERENCE NUMBER:

2

TOTAL SHEETS

FA1

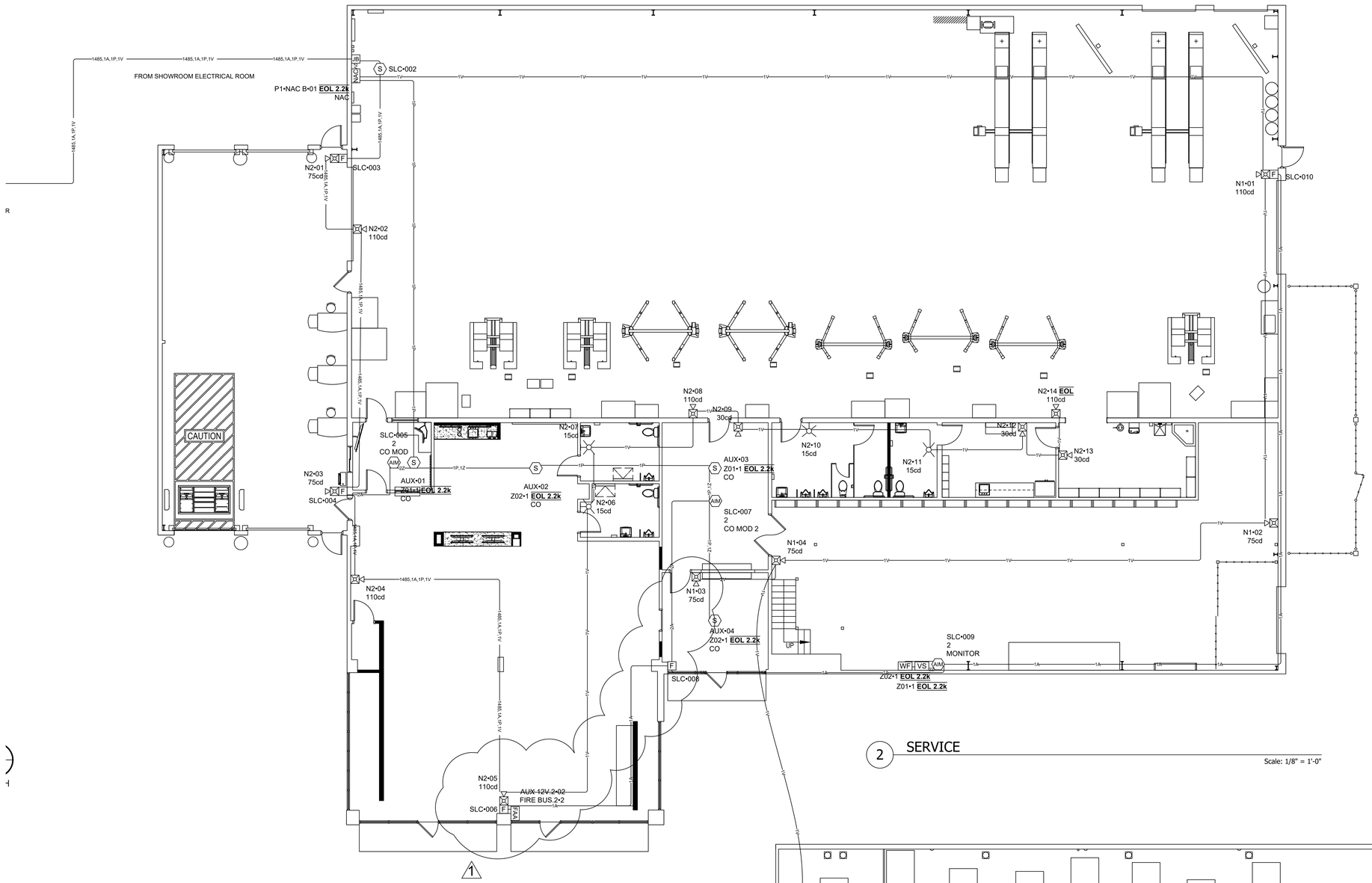

2 SERVICE

Scale: 1/8" = 1'-0"

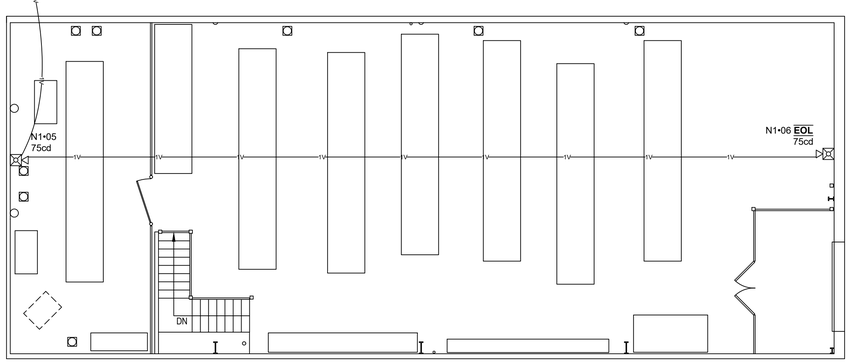

3 MEZZANINE ENLARGE

Scale: 1/8" = 1'0"

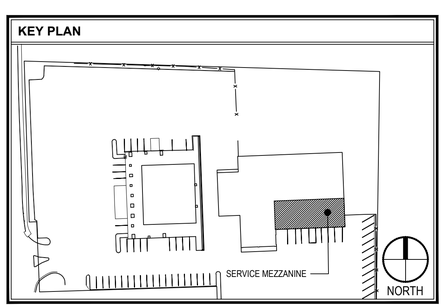

NORTH

YOUR LOGO INSERTED HERE

Number	DESCRIPTION	DATE	APPR.
	REVISION		

Date: 12/22/2022

Scale:

Project Number:

Designed by: ALERT

Drawn by: ALERT

Approved By:

YOUR COMPANY INFO

YOUR CONTACT AND CREDENTIALS

PROJECT INFO AND ADDRESS

SHEET REFERENCE NUMBER:
3
TOTAL SHEETS
FA2

PANEL P1 (GEMC-FW-32KT) BATTERY CALCULATION
(SECONDARY POWER SOURCE REQUIREMENTS)

					STANDBY CURRENT (AMPS)		SECONDARY ALARM CURRENT (AMPS)	
PANEL COMPONENTS		QTY	PART NO.	DESCRIPTION	CURRENT DRAW (A)	TOTAL (A)	CURRENT DRAW (A)	TOTAL
		1	GEMC-32MB	Assembly Main Board	0	**0**	0	**0**
		1	GEMC-FW-SLC	Addressable SLC Fire Module	0.07	**0.07**	0.475	**0.475**
CIRCUIT	SYMBOL	QTY	PART NO	DESCRIPTION	CURRENT DRAW (A)	TOTAL (A)	CURRENT DRAW (A)	TOTAL (A)
P1•AUX 12V	FAA	2	GEMC-FK1	LCD Fire Red Annunciator	0	**0**	0	**0**
P1•FIRE BUS	FAA	2	GEMC-FK1	LCD Fire Red Annunciator	0.115	**0.23**	0.115	**0.23**
P1•NAC A		4	P2RL	2-Wire, Horn Strobe, Red 30cd	0	**0**	0.107	**0.428**
		3	P2RL	2-Wire, Horn Strobe, Red 75cd	0	**0**	0.121	**0.363**
		1	P2RL	2-Wire, Horn Strobe, Red 75cd	0	**0**	0.156	**0.156**
		3	SRL	Strobe, Red 15cd	0	**0**	0.06	**0.18**
P1•NAC B	NAC	1	AL802ULADA	8-Amp, 24-Volt Power Supply	0	**0**	0.069	**0.069**
P1•SLC	AIM 2	3	FWC-FSLC-EZM2	Addressable SLC 2-zone conventional expansion module. Uses one address on SLC loop, but yields 2 indepent contact monitoring circuits, for pull stations, water flow and other dry contact alarm initiating devices.	0.0006	**0.0018**	0.00072	**0.00216**
	F	10	FWC-FSLC-PULL	Addressable SLC Fire Pull Station	0.00066	**0.0066**	0.008	**0.08**
	S	2	FWC-FSLC-SMK w/FWC-FSLC-SMK6B	Addressable Analog SLC Smoke, photoelectric, head**	0.00039	**0.00078**	0.0008	**0.0016**
					TOTAL STANDBY (A)	**0.30918**	TOTAL ALARM (A)	**1.98476**
					REQUIRED STANDBY TIME = 24 HOURS			
					REQUIRED ALARM TIME = 5 MINUTES			
SECONDARY STANDBY LOAD (A)				**0.30918**	24		**7.42**	
SECONDARY ALARM LOAD (A)				**1.98476**	0.08		**0.17**	
STANDBY AND ALARM SUBTOTAL (AMP HOURS)					**7.59**			
DERATING FACTOR					1.2			
SECONDARY LOAD REQUIREMENTS (AMP HOURS)					**9.1**			

*RECOMMENDED BATTERY SIZES NOT SPECIFIED. REFER TO MANUFACTURER DOCUMENTATION.
*BATTERY BOX SIZE CAPACITY NOT SPECIFIED. REFER TO MANUFACTURER DOCUMENTATION.

PANEL NAC (AL802ULADA) BATTERY CALCULATION
(SECONDARY POWER SOURCE REQUIREMENTS)

PANEL POWER SUPPLY MAX CURRENT = 8A — TOTAL USED CAPACITY (IN ALARM) = 2.686A (33.58 %)

					STANDBY CURRENT (AMPS)		SECONDARY ALARM CURRENT (AMPS)	
PANEL COMPONENTS		QTY	PART NO.	DESCRIPTION	CURRENT DRAW (A)	TOTAL (A)	CURRENT DRAW (A)	TOTAL
		1	AL802ULADA Main Board	Fire Alarm Power Supply Main Board	0.09	**0.09**	0.175	**0.175**
CIRCUIT	SYMBOL	QTY	PART NO	DESCRIPTION	CURRENT DRAW (A)	TOTAL (A)	CURRENT DRAW (A)	TOTAL (A)
NAC•AUX	S CO	4	COSMO-4W	12/24 volt, 4-wire, system-connected, combination carbon monoxide/smoke detector with RealTest technology	0	**0**	0.04	**0.16**
NAC•N1		4	P2RL	2-Wire, Horn Strobe, Red 75cd	0	**0**	0.121	**0.484**
		1	P2RL	2-Wire, Horn Strobe, Red 75cd	0	**0**	0.156	**0.156**
		1	P2RL	2-Wire, Horn Strobe, Red 110cd	0	**0**	0.162	**0.162**
NAC•N2		3	P2RL	2-Wire, Horn Strobe, Red 30cd	0	**0**	0.074	**0.222**
		1	P2RL	2-Wire, Horn Strobe, Red 75cd	0	**0**	0.121	**0.121**
		1	P2RL	2-Wire, Horn Strobe, Red 75cd	0	**0**	0.156	**0.156**
		5	P2RL	2-Wire, Horn Strobe, Red 110cd	0	**0**	0.162	**0.81**
		4	SRL	Strobe, Red 15cd	0	**0**	0.06	**0.24**
					TOTAL STANDBY (A)	**0.09**	TOTAL ALARM (A)	**2.686**
					REQUIRED STANDBY TIME = 24 HOURS			
					REQUIRED ALARM TIME = 5 MINUTES			
SECONDARY STANDBY LOAD (A)				**0.09**	24		**2.16**	
SECONDARY ALARM LOAD (A)				**2.686**	0.08		**0.22**	
STANDBY AND ALARM SUBTOTAL (AMP HOURS)					**2.38**			
DERATING FACTOR					1.2			
SECONDARY LOAD REQUIREMENTS (AMP HOURS)					**2.86**			

PROVIDE (2) 12V 7AH BATTERIES
*BATTERY BOX SIZE CAPACITY NOT SPECIFIED. REFER TO MANUFACTURER DOCUMENTATION.

P1 SLC DEVICE SCHEDULE

CIRCUIT SETTINGS		TOTALS	
Max. Circuit Length (Ft)	n/a	Total Circuit Length (Ft)	805
Max. SLC NAPCO FIRE:	126	Total Used SLC NAPCO FIRE:	**15**

Circuit Wiring Properties: 'A' 18/2 FPLP/R (SLC) 18 AWG, 2 Cond. Solid Copper FPLP/R Addressable Unshielded
Distance measured using drawn segment lengths with 10.00 % additional length calculated

Device Label	Part No.	Building	Floor	Location	Description	Dist. From Previous (Ft)
SLC•001	FWC-FSLC-SMK w/FWC-FSLC-SMK6B				Addressable Analog SLC Smoke, photoelectric, head**	1
SLC•002	FWC-FSLC-SMK w/FWC-FSLC-SMK6B				Addressable Analog SLC Smoke, photoelectric, head**	83
SLC•003	FWC-FSLC-PULL				Addressable SLC Fire Pull Station	19
SLC•004	FWC-FSLC-PULL				Addressable SLC Fire Pull Station	59
SLC•005	FWC-FSLC-EZM2				Addressable SLC 2-zone conventional expansion module. Uses one address on SLC loop, but yields 2 indepent contact monitoring circuits, for pull stations, water flow and other dry contact alarm initiating devices.	12
SLC•006	FWC-FSLC-PULL				Addressable SLC Fire Pull Station	83
SLC•007	FWC-FSLC-EZM2				Addressable SLC 2-zone conventional expansion module. Uses one address on SLC loop, but yields 2 indepent contact monitoring circuits, for pull stations, water flow and other dry contact alarm initiating devices.	81
SLC•008	FWC-FSLC-PULL				Addressable SLC Fire Pull Station	32
SLC•009	FWC-FSLC-EZM2				Addressable SLC 2-zone conventional expansion module. Uses one address on SLC loop, but yields 2 indepent contact monitoring circuits, for pull stations, water flow and other dry contact alarm initiating devices.	46
SLC•010	FWC-FSLC-PULL				Addressable SLC Fire Pull Station	136
			Branch 1 ()			
SLC.1•011	FWC-FSLC-PULL				Addressable SLC Fire Pull Station	11
SLC.1•012	FWC-FSLC-PULL				Addressable SLC Fire Pull Station	48
SLC.1•013	FWC-FSLC-PULL				Addressable SLC Fire Pull Station	63
SLC.1•014	FWC-FSLC-PULL				Addressable SLC Fire Pull Station	39
SLC.1•015	FWC-FSLC-PULL				Addressable SLC Fire Pull Station	91

P1 FIRE BUS DEVICE SCHEDULE

CIRCUIT SETTINGS		TOTALS	
Max. Circuit Length (Ft)	n/a	Total Circuit Length (Ft)	284
Max. FIRE BUS NAPCO:	7	Total Used FIRE BUS NAPCO:	**2**

Circuit Wiring Properties: '485' 18/2 FPLP/R (RS-485) 18 AWG, 2 Cond. Solid Copper FPLP/R Analog Unshielded
Distance measured using drawn segment lengths with 10.00 % additional length calculated

Device Label	Part No.	Building	Floor	Location	Description	Dist. From Previous (Ft)
			Branch 1 ()			
FIRE BUS.1•1	GEMC-FK1				LCD Fire Red Annunciator	130
			Branch 2 ()			
FIRE BUS.2•2	GEMC-FK1				LCD Fire Red Annunciator	153

MONITOR Z01 DEVICE SCHEDULE

CIRCUIT SETTINGS: Max. Circuit Length (Ft) n/a — TOTALS: Total Circuit Length (Ft) 1

Circuit Wiring Properties: 'Z' 18/2 FPLP/R (IDC) 18 AWG, 2 Cond. Solid Copper FPLP/R Analog Unshielded
Distance measured using drawn segment lengths with 10.00 % additional length calculated

Device Label	Part No.	Building	Floor	Location	Description	Dist. From Previous (Ft)
Z01•1 EOL 2.2k	VALVE TAMPER SUPERVISORY SWITCH					1

MONITOR Z02 DEVICE SCHEDULE

CIRCUIT SETTINGS: Max. Circuit Length (Ft) n/a — TOTALS: Total Circuit Length (Ft) 1

Circuit Wiring Properties: 'Z' 18/2 FPLP/R (IDC) 18 AWG, 2 Cond. Solid Copper FPLP/R Analog Unshielded
Distance measured using drawn segment lengths with 10.00 % additional length calculated

Device Label	Part No.	Building	Floor	Location	Description	Dist. From Previous (Ft)
Z02•1 EOL 2.2k	WATERFLOW SWITCH					1

CO MOD Z01 DEVICE SCHEDULE

CIRCUIT SETTINGS: Max. Circuit Length (Ft) n/a — TOTALS: Total Circuit Length (Ft) 2

Circuit Wiring Properties: 'Z' 18/2 FPLP/R (IDC) 18 AWG, 2 Cond. Solid Copper FPLP/R Analog Unshielded
Distance measured using drawn segment lengths with 10.00 % additional length calculated

Device Label	Part No.	Building	Floor	Location	Description	Dist. From Previous (Ft)
Z01•1 EOL 2.2k	COSMO-4W				12/24 volt, 4-wire, system-connected, combination carbon monoxide/smoke detector with RealTest technology	2

CO MOD Z02 DEVICE SCHEDULE

CIRCUIT SETTINGS: Max. Circuit Length (Ft) n/a — TOTALS: Total Circuit Length (Ft) 21

Circuit Wiring Properties: 'Z' 18/2 FPLP/R (IDC) 18 AWG, 2 Cond. Solid Copper FPLP/R Analog Unshielded
Distance measured using drawn segment lengths with 10.00 % additional length calculated

Device Label	Part No.	Building	Floor	Location	Description	Dist. From Previous (Ft)
Z02•1 EOL 2.2k	COSMO-4W				12/24 volt, 4-wire, system-connected, combination carbon monoxide/smoke detector with RealTest technology	21

CO MOD 2 Z01 DEVICE SCHEDULE

CIRCUIT SETTINGS: Max. Circuit Length (Ft) n/a — TOTALS: Total Circuit Length (Ft) 5

Circuit Wiring Properties: 'Z' 18/2 FPLP/R (IDC) 18 AWG, 2 Cond. Solid Copper FPLP/R Analog Unshielded
Distance measured using drawn segment lengths with 10.00 % additional length calculated

Device Label	Part No.	Building	Floor	Location	Description	Dist. From Previous (Ft)
Z01•1 EOL 2.2k	COSMO-4W				12/24 volt, 4-wire, system-connected, combination carbon monoxide/smoke detector with RealTest technology	5

CO MOD 2 Z02 DEVICE SCHEDULE

CIRCUIT SETTINGS: Max. Circuit Length (Ft) n/a — TOTALS: Total Circuit Length (Ft) 19

Circuit Wiring Properties: 'Z' 18/2 FPLP/R (IDC) 18 AWG, 2 Cond. Solid Copper FPLP/R Analog Unshielded
Distance measured using drawn segment lengths with 10.00 % additional length calculated

Device Label	Part No.	Building	Floor	Location	Description	Dist. From Previous (Ft)
Z02•1 EOL 2.2k	COSMO-4W				12/24 volt, 4-wire, system-connected, combination carbon monoxide/smoke detector with RealTest technology	19

P1 AUX 12V POINT-TO-POINT REPORT

CIRCUIT SETTINGS		TOTALS	
Starting Calculation Voltage:	10.2	Max. Voltage Drop:	**0**
Min. Operational Voltage:	8	End Of Line Voltage:	**10.2**
Max. Circuit Current (A):	0.75	Voltage Drop Percent:	**0.00 %**
Wire Resistance (Ω/kFt):	3.07	Total Circuit Current (A):	**0**
Total Circuit Length (Ft):	284	Spare Current (A):	**0.75**
Total Circuit Resistance (Ω):	1.740994	Spare Current (A) Percent:	**100.00 %**

Circuit Wiring Properties: 'P' 14/2 FPLP/R (AUX) 14 AWG, 2 Cond. Solid Copper FPLP/R Unshielded
Distance measured using drawn segment lengths with 10.00 % additional length calculated

Device Label	Part No.	Description	Device Current (A)	Remaining Current (A)	Dist. From Previous (Ft)	Resistance From Previous (Ω)	Voltage Drop From Previous	Voltage At Device	Total Voltage Drop	Voltage Drop Percent
					Branch 1 ()					
AUX 12V.1•01	GEMC-FK1	LCD Fire Red Annunciator	0	0	52	0.322342	0	10.2	0	0.00 %
					Branch 2 ()					
AUX 12V.2•02	GEMC-FK1	LCD Fire Red Annunciator	0	0	153	0.942233	0	10.2	0	0.00 %

Calculation Methods:
Resistance From Previous (Ω) = Wire Resistance (Ω/Ft) x 2 x Dist. From Previous (Ft)
Voltage Drop From Previous = Resistance From Previous (Ω) x Remaining Current (A)

P1 NAC A POINT-TO-POINT REPORT

CIRCUIT SETTINGS		TOTALS	
Starting Calculation Voltage:	20.4	Max. Voltage Drop:	**1.19**
Min. Operational Voltage:	16	End Of Line Voltage:	**19.21**
Max. Circuit Current (A):	2	Voltage Drop Percent:	**5.86 %**
Wire Resistance (Ω/kFt):	3.07	Total Circuit Current (A):	**1.127**
Total Circuit Length (Ft):	306	Spare Current (A):	**0.873**
Total Circuit Resistance (Ω):	1.876491	Spare Current (A) Percent:	**43.65 %**

Circuit Wiring Properties: 'V' 14/2 FPLP/R (NAC) 14 AWG, 2 Cond. Solid Copper FPLP/R Analog Unshielded
Distance measured using drawn segment lengths with 10.00 % additional length calculated

Device Label	Part No.	Description	Device Current (A)	Remaining Current (A)	Dist. From Previous (Ft)	Resistance From Previous (Ω)	Voltage Drop From Previous	Voltage At Device	Total Voltage Drop	Voltage Drop Percent
NAC A•01	P2RL	2-Wire, Horn Strobe, Red 30cd	0.107	1.127	14	0.071322	0.08	20.3	0.1	0.48 %
NAC A•02	SRL	Strobe, Red 15cd	0.06	1.02	61	0.375397	0.38	19.92	0.48	2.36 %
NAC A•03	P2RL	2-Wire, Horn Strobe, Red 30cd	0.107	0.96	11	0.065245	0.06	19.86	0.54	2.67 %
NAC A•04	P2RL	2-Wire, Horn Strobe, Red 30cd	0.107	0.853	13	0.077172	0.07	19.79	0.61	2.99 %
NAC A•05	P2RL	2-Wire, Horn Strobe, Red 75cd	0.121	0.746	32	0.194727	0.15	19.65	0.75	3.70 %
NAC A•06	P2RL	2-Wire, Horn Strobe, Red 75cd	0.121	0.625	24	0.149677	0.09	19.55	0.85	4.16 %
NAC A•07	P2RL	2-Wire, Horn Strobe, Red 75cd	0.121	0.504	78	0.480542	0.24	19.31	1.09	5.35 %
NAC A•08	P2RL	2-Wire, Horn Strobe, Red 75cd	0.156	0.383	24	0.145814	0.06	19.25	1.15	5.62 %
NAC A•09	P2RL	2-Wire, Horn Strobe, Red 30cd	0.107	0.227	23	0.141534	0.03	19.22	1.18	5.78 %
NAC A•10	SRL	Strobe, Red 15cd	0.06	0.12	17	0.103661	0.01	19.21	1.19	5.84 %
NAC A•11 EOL 2.2k	SRL	Strobe, Red 15cd	0.06	0.06	9	0.055481	0	19.21	1.19	5.86 %

Calculation Methods:
Resistance From Previous (Ω) = Wire Resistance (Ω/Ft) x 2 x Dist. From Previous (Ft)
Voltage Drop From Previous = Resistance From Previous (Ω) x Remaining Current (A)

P1 NAC B POINT-TO-POINT REPORT

CIRCUIT SETTINGS		TOTALS	
Starting Calculation Voltage:	20.4	Max. Voltage Drop:	**0.03**
Min. Operational Voltage:	16	End Of Line Voltage:	**20.37**
Max. Circuit Current (A):	2	Voltage Drop Percent:	**0.16 %**
Wire Resistance (Ω/kFt):	3.07	Total Circuit Current (A):	**0.069**
Total Circuit Length (Ft):	79	Spare Current (A):	**1.931**
Total Circuit Resistance (Ω):	0.482178	Spare Current (A) Percent:	**96.55 %**

Circuit Wiring Properties: 'V' 14/2 FPLP/R (NAC) 14 AWG, 2 Cond. Solid Copper FPLP/R Analog Unshielded
Distance measured using drawn segment lengths with 10.00 % additional length calculated

Device Label	Part No.	Description	Device Current (A)	Remaining Current (A)	Dist. From Previous (Ft)	Resistance From Previous (Ω)	Voltage Drop From Previous	Voltage At Device	Total Voltage Drop	Voltage Drop Percent
P1•NAC B•01 EOL 2.2k	AL802ULADA	8-Amp, 24-Volt Power Supply	0.069	0.069	79	0.005759	0	20.37	0.03	0.16 %

Calculation Methods:
Resistance From Previous (Ω) = Wire Resistance (Ω/Ft) x 2 x Dist. From Previous (Ft)
Voltage Drop From Previous = Resistance From Previous (Ω) x Remaining Current (A)

NAC AUX POINT-TO-POINT REPORT

CIRCUIT SETTINGS		TOTALS	
Starting Calculation Voltage:	20.4	Max. Voltage Drop:	**0.1**
Min. Operational Voltage:	16	End Of Line Voltage:	**20.3**
Max. Circuit Current (A):	2.5	Voltage Drop Percent:	**0.50 %**
Wire Resistance (Ω/kFt):	3.07	Total Circuit Current (A):	**0.16**
Total Circuit Length (Ft):	141	Spare Current (A):	**2.34**
Total Circuit Resistance (Ω):	0.865522	Spare Current (A) Percent:	**93.60 %**

Circuit Wiring Properties: 'P' 14/2 FPLP/R (AUX) 14 AWG, 2 Cond. Solid Copper FPLP/R Unshielded
Distance measured using drawn segment lengths with 10.00 % additional length calculated

Device Label	Part No.	Description	Device Current (A)	Remaining Current (A)	Dist. From Previous (Ft)	Resistance From Previous (Ω)	Voltage Drop From Previous	Voltage At Device	Total Voltage Drop	Voltage Drop Percent
AUX•01	COSMO-4W	12/24 volt, 4-wire, system-connected, combination carbon monoxide/smoke detector with RealTest technology	0.04	0.16	71	0.43355	0.07	20.33	0.07	0.34 %
AUX•02	COSMO-4W	12/24 volt, 4-wire, system-connected, combination carbon monoxide/smoke detector with RealTest technology	0.04	0.12	18	0.113439	0.01	20.32	0.08	0.41 %
AUX•03	COSMO-4W	12/24 volt, 4-wire, system-connected, combination carbon monoxide/smoke detector with RealTest technology	0.04	0.08	28	0.170529	0.01	20.3	0.1	0.47 %
AUX•04	COSMO-4W	12/24 volt, 4-wire, system-connected, combination carbon monoxide/smoke detector with RealTest technology	0.04	0.04	24	0.148004	0.01	20.3	0.1	0.50 %

Calculation Methods:
Resistance From Previous (Ω) = Wire Resistance (Ω/Ft) x 2 x Dist. From Previous (Ft)
Voltage Drop From Previous = Resistance From Previous (Ω) x Remaining Current (A)

NAC N1 POINT-TO-POINT REPORT

CIRCUIT SETTINGS		TOTALS	
Starting Calculation Voltage:	20.4	Max. Voltage Drop:	**1.46**
Min. Operational Voltage:	16	End Of Line Voltage:	**18.94**
Max. Circuit Current (A):	2.5	Voltage Drop Percent:	**7.17 %**
Wire Resistance (Ω/kFt):	3.07	Total Circuit Current (A):	**0.802**
Total Circuit Length (Ft):	441	Spare Current (A):	**1.698**
Total Circuit Resistance (Ω):	2.704844	Spare Current (A) Percent:	**67.92 %**

Circuit Wiring Properties: 'V' 14/2 FPLP/R (NAC) 14 AWG, 2 Cond. Solid Copper FPLP/R Analog Unshielded
Distance measured using drawn segment lengths with 10.00 % additional length calculated

Device Label	Part No.	Description	Device Current (A)	Remaining Current (A)	Dist. From Previous (Ft)	Resistance From Previous (Ω)	Voltage Drop From Previous	Voltage At Device	Total Voltage Drop	Voltage Drop Percent
N1•01	P2RL	2-Wire, Horn Strobe, Red 110cd	0.162	0.802	164	1.00519	0.81	19.59	0.81	3.95 %
N1•02	P2RL	2-Wire, Horn Strobe, Red 75cd	0.121	0.64	56	0.343759	0.22	19.37	1.03	5.03 %
N1•03	P2RL	2-Wire, Horn Strobe, Red 75cd	0.156	0.519	99	0.609757	0.32	19.06	1.34	6.58 %
N1•04	P2RL	2-Wire, Horn Strobe, Red 75cd	0.121	0.363	15	0.089781	0.03	19.02	1.38	6.74 %
N1•05	P2RL	2-Wire, Horn Strobe, Red 75cd	0.121	0.242	10	0.0614	0.01	19.01	1.39	6.81 %
N1•06 EOL	P2RL	2-Wire, Horn Strobe, Red 75cd	0.121	0.121	97	0.594957	0.07	18.94	1.46	7.17 %

Calculation Methods:
Resistance From Previous (Ω) = Wire Resistance (Ω/Ft) x 2 x Dist. From Previous (Ft)
Voltage Drop From Previous = Resistance From Previous (Ω) x Remaining Current (A)

NAC N2 POINT-TO-POINT REPORT

CIRCUIT SETTINGS		TOTALS	
Starting Calculation Voltage:	20.4	Max. Voltage Drop:	**1.69**
Min. Operational Voltage:	16	End Of Line Voltage:	**18.71**
Max. Circuit Current (A):	2.5	Voltage Drop Percent:	**8.30 %**
Wire Resistance (Ω/kFt):	3.07	Total Circuit Current (A):	**1.549**
Total Circuit Length (Ft):	315	Spare Current (A):	**0.951**
Total Circuit Resistance (Ω):	1.933914	Spare Current (A) Percent:	**38.04 %**

Circuit Wiring Properties: 'V' 14/2 FPLP/R (NAC) 14 AWG, 2 Cond. Solid Copper FPLP/R Analog Unshielded
Distance measured using drawn segment lengths with 10.00 % additional length calculated

Device Label	Part No.	Description	Device Current (A)	Remaining Current (A)	Dist. From Previous (Ft)	Resistance From Previous (Ω)	Voltage Drop From Previous	Voltage At Device	Total Voltage Drop	Voltage Drop Percent
N2•01	P2RL	2-Wire, Horn Strobe, Red 75cd	0.121	1.549	24	0.144635	0.22	20.18	0.22	1.10 %
N2•02	P2RL	2-Wire, Horn Strobe, Red 110cd	0.162	1.428	16	0.09523	0.14	20.04	0.36	1.76 %
N2•03	P2RL	2-Wire, Horn Strobe, Red 75cd	0.156	1.266	44	0.267456	0.34	19.7	0.7	3.42 %
N2•04	P2RL	2-Wire, Horn Strobe, Red 110cd	0.162	1.11	14	0.087344	0.1	19.6	0.8	3.90 %
N2•05	P2RL	2-Wire, Horn Strobe, Red 110cd	0.162	0.948	57	0.350397	0.33	19.27	1.13	5.53 %
N2•06	SRL	Strobe, Red 15cd	0.06	0.786	60	0.367165	0.29	18.98	1.42	6.94 %
N2•07	SRL	Strobe, Red 15cd	0.06	0.726	8	0.047497	0.03	18.95	1.45	7.11 %
N2•08	P2RL	2-Wire, Horn Strobe, Red 110cd	0.162	0.666	21	0.131319	0.09	18.86	1.54	7.54 %
N2•09	P2RL	2-Wire, Horn Strobe, Red 30cd	0.074	0.504	8	0.052007	0.03	18.84	1.56	7.67 %
N2•10	SRL	Strobe, Red 15cd	0.06	0.43	11	0.065486	0.03	18.81	1.59	7.81 %
N2•11	SRL	Strobe, Red 15cd	0.06	0.37	22	0.137371	0.05	18.76	1.64	8.06 %
N2•12	P2RL	2-Wire, Horn Strobe, Red 30cd	0.074	0.31	16	0.099066	0.03	18.73	1.67	8.21 %
N2•13	P2RL	2-Wire, Horn Strobe, Red 30cd	0.074	0.236	9	0.055556	0.01	18.71	1.69	8.27 %
N2•14 EOL	P2RL	2-Wire, Horn Strobe, Red 110cd	0.162	0.162	5	0.033385	0.01	18.71	1.69	8.30 %

Calculation Methods:
Resistance From Previous (Ω) = Wire Resistance (Ω/Ft) x 2 x Dist. From Previous (Ft)
Voltage Drop From Previous = Resistance From Previous (Ω) x Remaining Current (A)

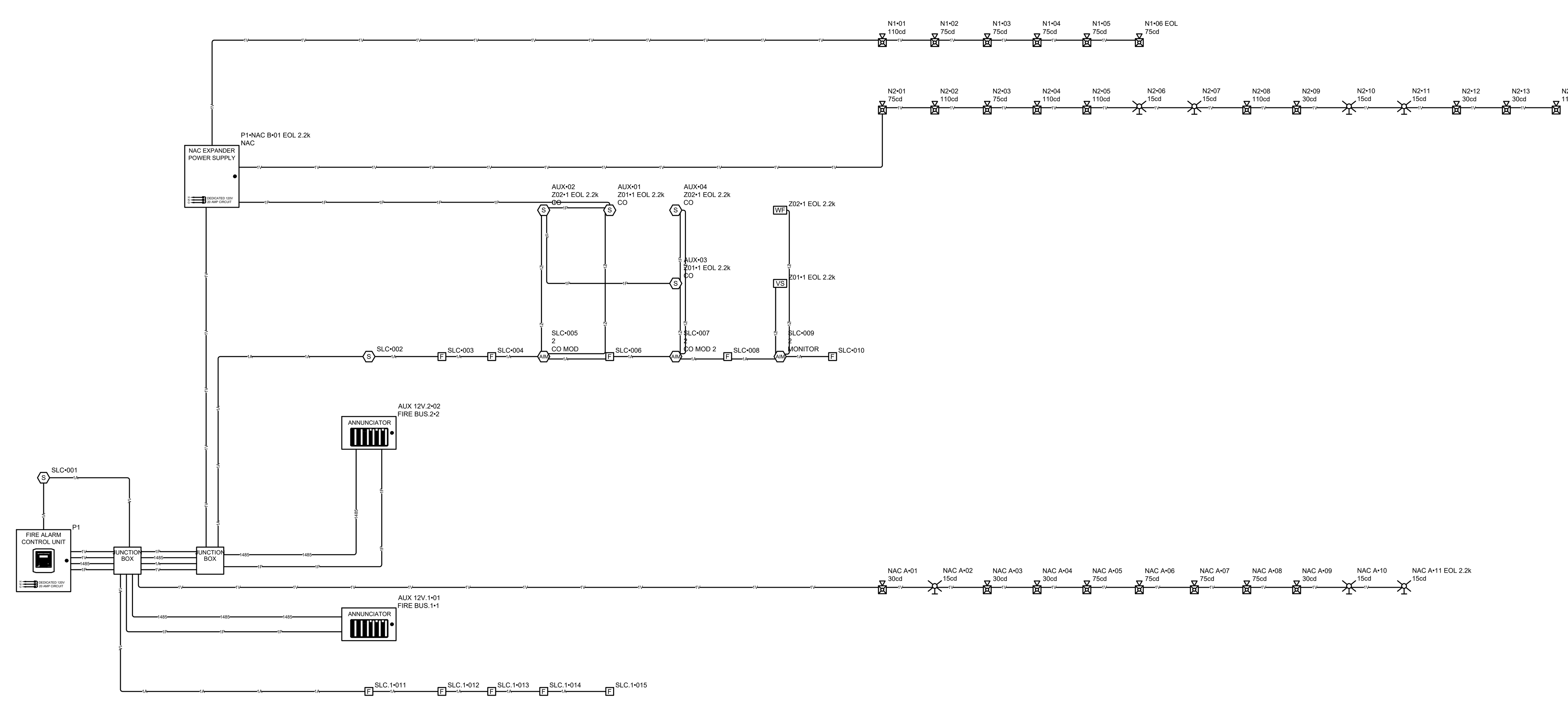

RISER DIAGRAM

YOUR LOGO INSERTED HERE

REVISION — Number | DESCRIPTION | DATE: | APPR.

Date: 12/22/2022
Scale:
Project Number:
Designed by: ALERT
Drawn by: ALERT
Approved By:

YOUR COMPANY INFO
YOUR CONTACT AND CREDENTIALS
PROJECT INFO AND ADDRESS

SHEET REFERENCE NUMBER:
4
TOTAL SHEETS
FA3