Hardware Sets & Pricing

Mortise Entry Handle - Thumbpiece x Thumbpiece Sets

MTT-EN Mortise Entry Handle TP x TP - Entry Set

Exterior Interior

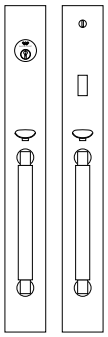

You Select

- **Entry handle - exterior**
- **Back to back entry handle - interior**
- Large escutcheon - exterior & interior
- Thumb turn - interior

Pricing tier determined by the highest tier level of the entry handles used for each set.

Included With Set

- Mortise lock - specify function and backset
- Mortise lock face plate
- Thumbpiece - exterior & interior
- Through bolts or surface mount screws
- Mortise cylinder with cylinder cap
- Cylinder blocking ring - exterior (if required)
- Strike plate & dust box
- Optional cylinder x cylinder available

Pricing

Code	Description & Notes	Tier I	Tier II	Tier III
MTT-EN	Entry Function	$1,649	$1,769	$1,948
	9148 - Standard - Includes toggle to unlock exterior 9124 - Subtract $55 - No toggle LL - Subtract $550 - Less lock			

MTT-ST Mortise Entry Handle TP x TP - Storeroom Set

Exterior Interior

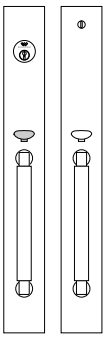

You Select

- **Entry handle - exterior**
- **Back to back entry handle - interior**
- Large escutcheon - exterior & interior

Pricing tier determined by the highest tier level of the entry handles used for each set.

Included With Set

- Mortise lock - specify function and backset
- Mortise lock face plate
- Fixed thumbpiece - exterior
- Thumbpiece - interior
- Through bolts or surface mount screws
- Mortise cylinder with cylinder cap
- Cylinder blocking ring - exterior (if required)
- Strike plate & dust box
- Optional cylinder x cylinder available 9124 lock only.

Pricing

Code	Description & Notes	Tier I	Tier II	Tier III
MTT-ST	Storeroom Function	$1,557	$1,675	$1,855
	9159 - Standard - fixed thumbpiece x active thumbpiece 9124 - Subtract $55 - No toggle LL - Subtract $550 - Less lock			

MTT-PT Mortise Entry Handle TP x TP - Patio Set

Exterior Interior

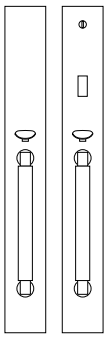

You Select

- **Entry handle - exterior**
- **Back to back entry handle - interior**
- Large escutcheon - exterior & interior
- Thumb turn - interior

Pricing tier determined by the highest tier level of the entry handles used for each set.

Included With Set

- Mortise lock - specify function and backset
- Mortise lock face plate
- Thumbpiece - exterior & interior
- Through bolts or surface mount screws
- Strike plate & dust box

Pricing

Code	Description & Notes	Tier I	Tier II	Tier III
MTT-PT	Patio Function	$1,555	$1,675	$1,855
	9139 - Standard - thumbpiece x thumbpiece LL - Subtract $495 - Less lock			

Mortise Entry Handle - Thumbpiece x Thumbpiece Sets

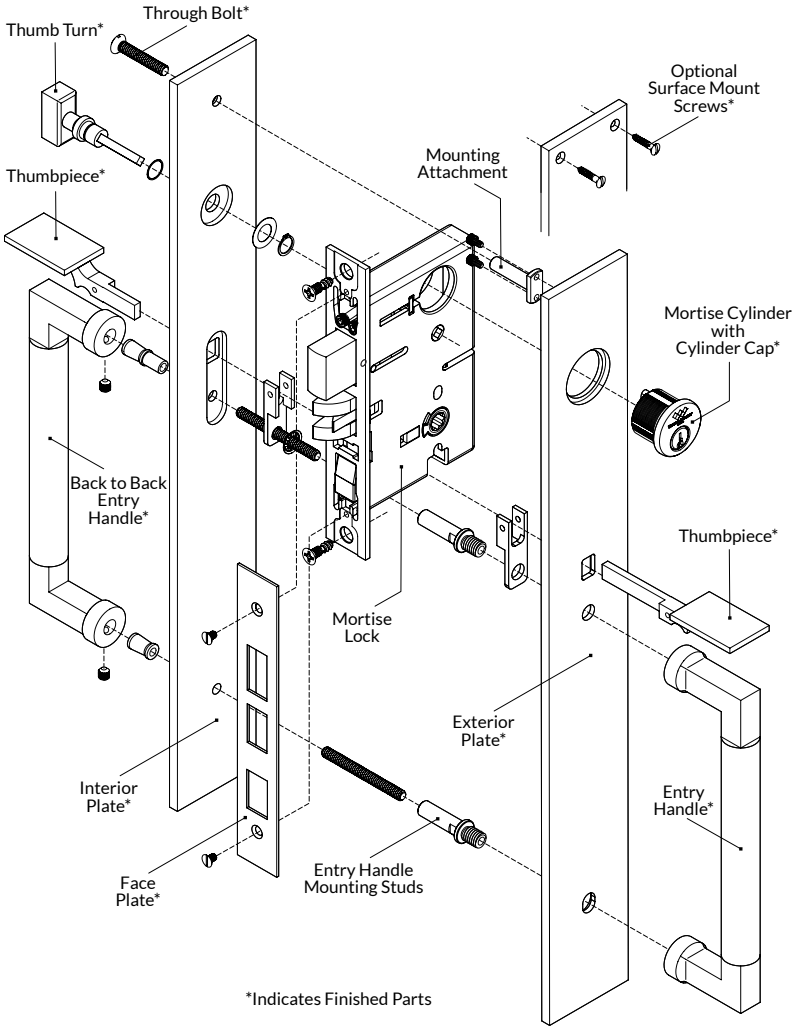

Mortise entry handle - thumbpiece x thumbpiece sets are typically used on exterior doors. 9000 / 9100 series locks are standard.

- Base pricing for each set is determined by the highest tier level for the entry handle chosen.
- Through bolting is standard for most escutcheon sets, but surface mount is available with no upcharge if requested.
- Unless otherwise requested, the thumbpiece is paired with the corresponding entry handle.
- Extended lip strikes are available upon request. See the ***Forms & Supplements*** section for ordering form.
- Standard backsets for mortise locks: 2-1/2" and 2-3/4". Electrified, marine grade, magnetic, and Smart Locks priced on application. See ***Locks & Latches*** section for more information.
- **Add $138** for each plate with KN (Knurl) edge details.
- For split finish orders, the face and strike plates are finished subject to door handing. **Add 10%** for split finish on all functions.

Hardware Schedule Example

		STYLE							
		EXTERIOR				INTERIOR			
FUNCTION DESCRIPTION	TYPE - FUNCTION	LEVER - KNOB HANDLE	ESCUTCHEON ROSETTE	CYLINDER E.E.	TRIM	LEVER - KNOB HANDLE	ESCUTCHEON ROSETTE	THUMB TURN CYLINDER	TRIM
ENTRY	MTT-EN	7813	21500	CYL	NA	7813	21500	22009	NA
STOREROOM	MTT-ST	7813	21500	CYL	NA	7813	21500	NA	NA
PATIO	MTT-PT	7813	21500	NA	NA	7813	21500	22009	NA

Mortise Entry Handle - Thumbpiece x Knob / Lever Sets

MTKL-EN Mortise Entry Handle - Entry Set

Exterior Interior

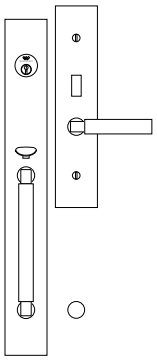

You Select

- **Entry handle - exterior**
- **Knob or lever - interior**
- Large Escutcheon - exterior
- Medium Escutcheon - interior
- Thumb turn - interior

Pricing tier determined by the highest tier level of the entry handle, lever, or knob.

Included With Set

- Mortise lock - specify function and backset
- Mortise lock face plate
- Thumbpiece - exterior
- Half spindle
- Through bolts or surface mount screws
- Through bolt cover
- Mortise cylinder with cylinder cap
- Cylinder blocking ring - exterior (if required)
- Strike plate & dust box
- Optional cylinder x cylinder available

Pricing

Code	Description & Notes	Tier I	Tier II	Tier III
MTKL-EN	Entry Function	$1,461	$1,581	$1,759

9148 - No upcharge - Includes toggle to unlock exterior
9149 - Standard - Includes toggle to lock exterior
9167 - Add $55 - Includes toggle to unlock exterior & auxiliary latch
9169 - Add $55 - Includes toggle to lock exterior & auxiliary latch
9124 - Subtract $55 - No toggle
LL - Subtract $550 - Less lock

MTKL-ST Mortise Entry Handle - Storeroom Set

Exterior Interior

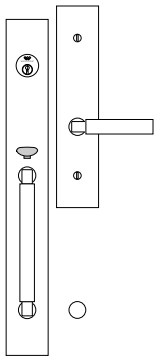

You Select

- **Entry handle - exterior**
- **Knob or lever - interior**
- Large Escutcheon - exterior
- Medium Escutcheon - interior

Pricing tier determined by the highest tier level of the entry handle, lever, or knob.

Included With Set

- Mortise lock - specify function and backset
- Mortise lock face plate
- Fixed thumbpiece - exterior
- Half spindle
- Through bolts or surface mount screws
- Through bolt cover
- Mortise cylinder with cylinder cap
- Strike plate & dust box
- Optional cylinder x cylinder available, 9124 lock only.

Pricing

Code	Description & Notes	Tier I	Tier II	Tier III
MTKL-ST	Storeroom Function	$1,367	$1,487	$1,667

9159 - Standard - fixed thumbpiece x active lever or knob
9124 - Subtract $55 - No toggle
LL - Subtract $550 - Less lock

MTKL-PT Mortise Entry Handle - Patio Set

Exterior Interior

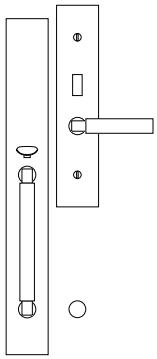

You Select

- **Entry handle - exterior**
- **Knob or lever - interior**
- Large Escutcheon - exterior
- Medium Escutcheon - interior
- Thumb turn - interior

Pricing tier determined by the highest tier level of the entry handle, lever, or knob.

Included With Set

- Mortise lock - specify function and backset
- Mortise lock face plate
- Thumbpiece - exterior
- Half spindle
- Through bolts or surface mount screws
- Through bolt cover
- Strike plate & dust box

Pricing

Code	Description & Notes	Tier I	Tier II	Tier III
MTKL-PT	Patio Function	$1,367	$1,487	$1,667

9139 - Standard - thumbpiece x active lever or knob
9124 - No upcharge
LL - Subtract $495 - Less lock

Mortise Entry Handle - Thumbpiece x Knob / Lever Sets

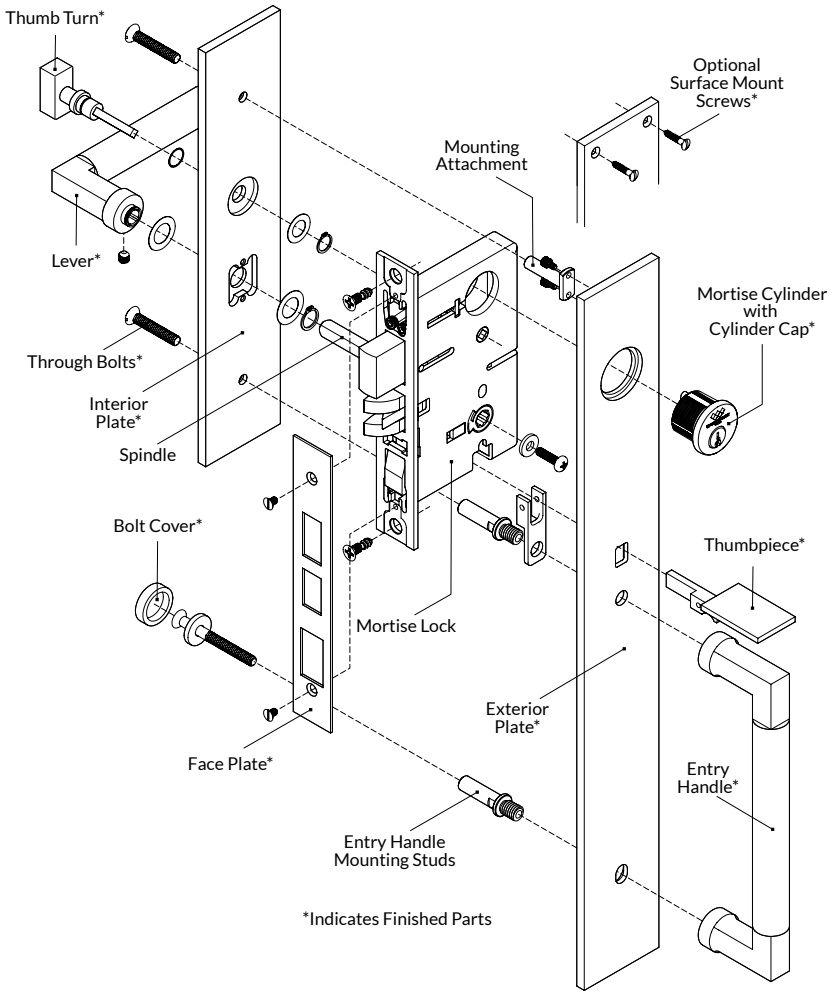

Mortise entry handle sets are typically used on exterior doors where a 9000 / 9100 series lock is recommended.

- Base pricing for each set is determined by the highest tier level chosen for the entry handle, knob or lever.
- Through bolting is standard for most escutcheon sets, but surface mount is available with no upcharge if requested.
- Unless otherwise requested, the thumbpiece is paired with the corresponding entry handle.
- Extended lip strikes are available upon request. See the ***Forms & Supplements*** section for ordering form.
- Standard backsets for mortise locks: 2-1/2", 2-3/4". Custom backsets available upon request. Electrified, marine grade, magnetic, and Smart Locks priced on application. See ***Locks & Latches*** section for more information.
- **Add $138** for each plate with KN (Knurl) edge details.
- For split finish orders, the face and strike plates are finished subject to door handing. **Add 10%** for split finish on all functions.

Hardware Schedule Example

		STYLE							
		EXTERIOR				INTERIOR			
FUNCTION DESCRIPTION	TYPE - FUNCTION	LEVER - KNOB HANDLE	ESCUTCHEON ROSETTE	CYLINDER E.E.	TRIM	LEVER - KNOB HANDLE	ESCUTCHEON ROSETTE	THUMB TURN CYLINDER	TRIM
ENTRY	MTKL-EN	7813	21500	CYL	NA	23062	21501	22009	NA
STOREROOM	MTKL-ST	7813	21500	CYL	NA	23062	21501	NA	NA
PATIO	MTKL-PT	7813	21500	NA	NA	23062	21501	22009	NA

Mortise Entry Handle Dummy Sets

MTKL-FD Mortise Entry Handle - Full Dummy Set

Exterior Interior

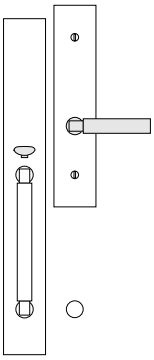

You Select

- **Entry handle - exterior**
- **Fixed knob or fixed lever - interior**
- Large escutcheon - exterior
- Medium escutcheon - interior

Pricing tier determined by the highest tier level of the entry handle, lever, or knob.

Included With Set

- Through bolts or surface mount screws
- Through bolt cover
- Fixed thumbpiece - exterior
- Entry handle mounting studs - exterior
- Half dummy mounting assembly - interior
- Dummy thumbpiece mounting plate - exterior

Pricing

Code	Description & Notes	Tier I	Tier II	Tier III
MTKL-FD	Full Dummy Function	$991	$1,110	$1,289

MTT-FD Mortise TP x TP Entry Handle - Full Dummy Set

Exterior Interior

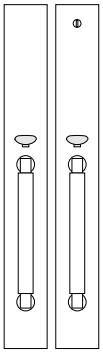

You Select

- **Entry handle - exterior**
- **Back to back entry handle - interior**
- Large escutcheon - exterior & interior
- Entry handle - exterior & interior

Pricing tier determined by the highest tier level of the entry handles used for each set.

Included With Set

- Through bolts or surface mount screws
- Fixed thumbpiece - exterior & interior
- Entry handle mounting studs - exterior
- Dummy thumbpiece mounting plates - ext. & int.

Pricing

Code	Description & Notes	Tier I	Tier II	Tier III
MTT-FD	Full Dummy Function	$1,155	$1,275	$1,454

Entry Handle Dummy Sets

MTKL-FD Mortise Entry Handle - Full Dummy Set

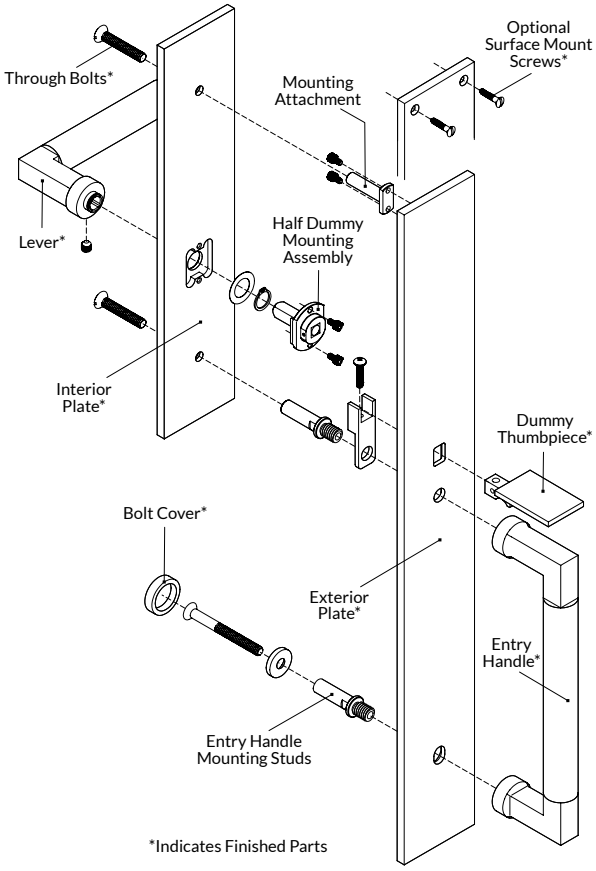

MTT-FD Mortise TP x TP Entry Handle - Full Dummy Set

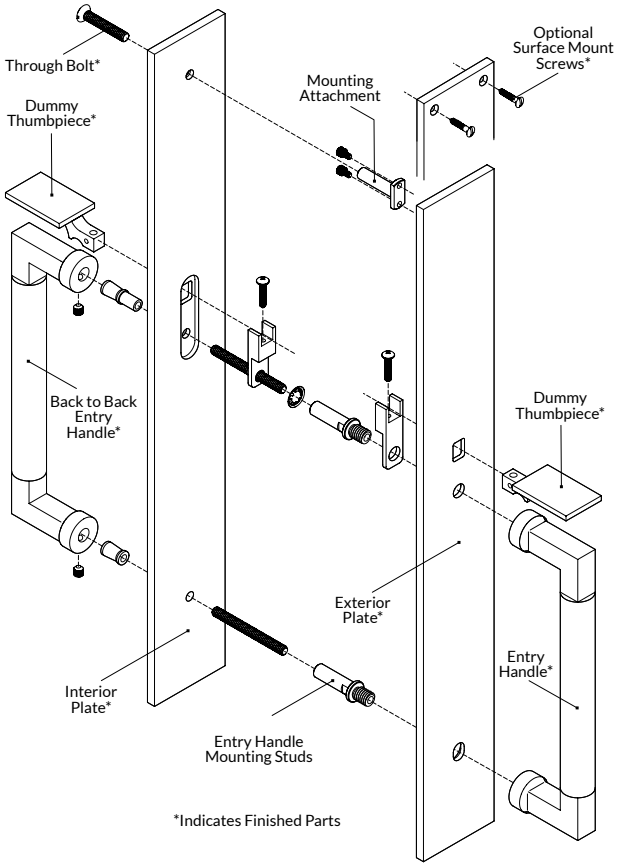

Entry handle dummy sets are designed to work as companions to active 9000 / 9100 lock sets. They feature fixed thumbpieces and knobs or levers. Dummy sets can be used as pull plates on interior doors.

- Base pricing for each set is determined by the highest tier level chosen for the entry handle, knob or lever.
- Through bolting is used on all entry handle sets to assure solid attachment of the pull handles. Optional surface mount screws on the plates are available with no upcharge if requested.
- Unless otherwise requested, the thumbpiece is paired with the corresponding entry handle.
- A half dummy entry pull plate would utilize through bolts with bolt covers. See ***PL-HD - Pull Plates*** section for pricing.
- **Add $138** for each plate with KN (Knurl) edge details.
- For split finish orders, the face and strike plates are finished subject to door handing. **Add 10%** for split finish on all functions.

Hardware Schedule Example

		STYLE							
		EXTERIOR				INTERIOR			
FUNCTION DESCRIPTION	TYPE - FUNCTION	LEVER - KNOB HANDLE	ESCUTCHEON ROSETTE	CYLINDER E.E.	TRIM	LEVER - KNOB HANDLE	ESCUTCHEON ROSETTE	THUMB TURN CYLINDER	TRIM
FULL DUMMY	MTKL-FD	7813	21500	NA	NA	23062	21501	NA	NA
FULL DUMMY	MTT-FD	7813	21500	NA	NA	7813 / 22043	21500	NA	NA

Mortise Escutcheon Entry & Patio Sets
Medium Plates

ME-EN Mortise Escutcheon - Entry Set

Exterior Interior

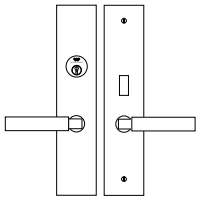

You Select

- **Knob or lever - exterior & interior**
- Medium escutcheon - exterior & interior
- Thumb turn

Tier level determined by the knob or lever for each set.

Included With Set

- Mortise lock - specify function and backset
- Mortise lock face plate
- Spindle
- Through bolts or surface mount screws
- Mortise cylinder
- Strike plate & dust box

Pricing

Code	Description & Notes	Tier I	Tier II	Tier III
ME-EN	Entry Function	$1,167	$1,287	$1,465

9148 - No upcharge - Includes toggle to unlock exterior
9149 - Standard - Includes toggle to lock exterior
9167 - Add $55 - Includes toggle to unlock exterior & auxiliary latch
9169 - Add $55 - Includes toggle to lock exterior & auxiliary latch
9124 - Subtract $55 - No toggle
LL - Subtract $550 - Less lock

ME-ST Mortise Escutcheon - Storeroom Set

Exterior Interior

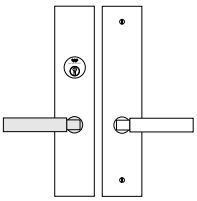

You Select

- **Knob or lever - exterior & interior**
- Medium escutcheon - exterior & interior

Tier level determined by the knob or lever for each set.

Included With Set

- Mortise lock - specify function and backset
- Mortise lock face plate
- Spindle
- Through bolts or surface mount screws
- Mortise cylinder
- Strike plate & dust box

Pricing

Code	Description & Notes	Tier I	Tier II	Tier III
ME-ST	Storeroom Function	$1,075	$1,194	$1,373

9159 - Standard - fixed exterior knob or lever - includes auxiliary latch
9124 - No upcharge - active knobs or levers - includes bolt and latch only
LL - Subtract $495 - Less lock

ME-PT Mortise Escutcheon - Patio Set

Exterior Interior

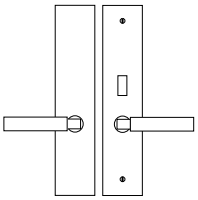

You Select

- **Knob or lever - exterior & interior**
- Medium escutcheon - exterior & interior
- Thumb turn

Tier level determined by the knob or lever for each set.

Included With Set

- Mortise lock - specify function and backset
- Mortise lock face plate
- Spindle
- Through bolts or surface mount screws
- Strike plate & dust box

Pricing

Code	Description & Notes	Tier I	Tier II	Tier III
ME-PT	Patio Function	$1,075	$1,194	$1,373

9139 - Standard
9839 - Subtract $220 - recommended for interior doors
LL - Subtract $495 - Less lock

Mortise Escutcheon Entry & Privacy Sets Medium Plates

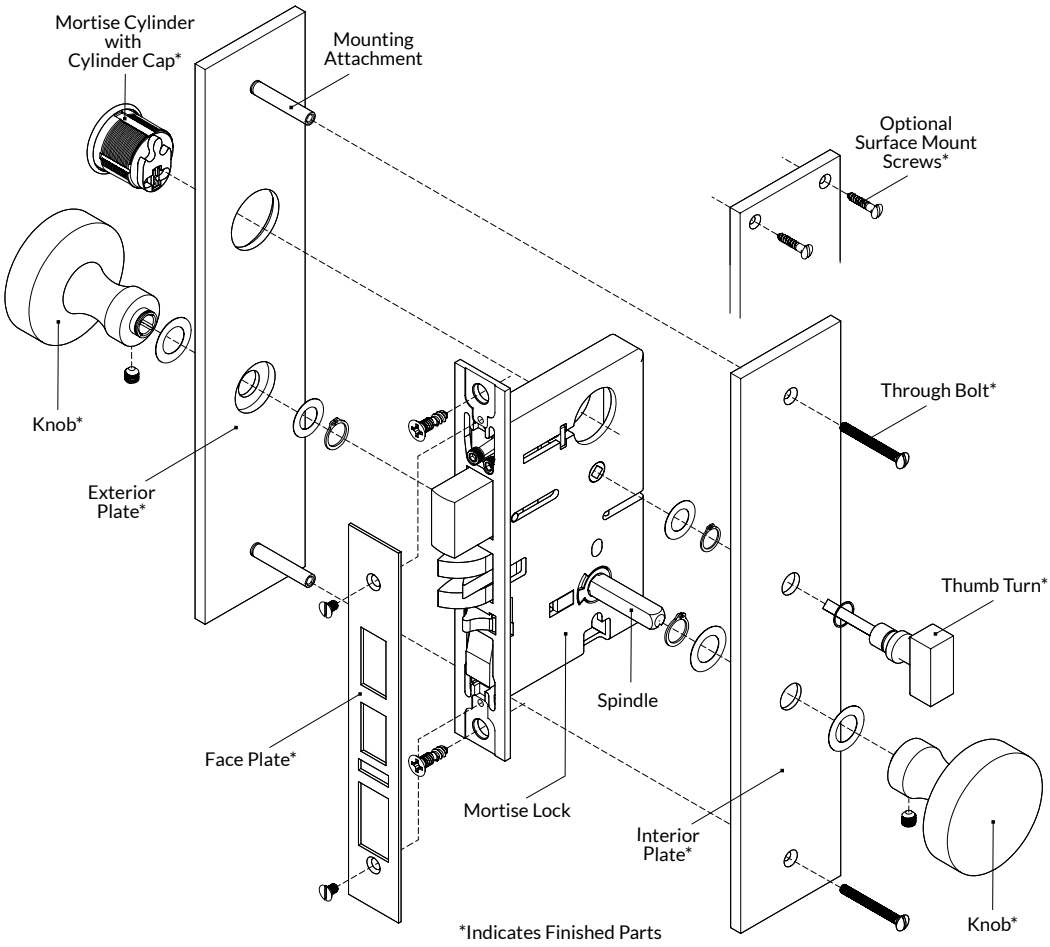

Mortise escutcheon entry sets are typically used on exterior doors where a 9000 / 9100 series lock is recommended.

- Base pricing for each set is determined by the tier level for the knob or lever. See ***Door Knobs*** or ***Door Levers*** section to select.
- Through bolting is standard for most escutcheon sets, but surface mount is available with no upcharge if requested.
- Spring assists are not typically required for mortise lock applications but are available upon request.
- Extended lip strikes are available upon request. See the ***Forms & Supplements*** section for ordering form.
- 9000 & 9100 mortise locks standard backsets: 2-1/2", 2-3/4". **Add $550** for 3-3/4" bkst | **Add $880** - 5" bkst | **Add $1,100** - 6" bkst. Electricfied, marine grade, magnetic, and Smart Locks priced on application. See ***Locks & Latches*** section for more information.
- 8700 & 8800 mortise locks **Add $88** for 1-1/2", 1-3/4", 2" or 2-1/4" narrow backsets.
- No upcharge - knob x knob upside down | **Add $99** - lever x lever upside down | **Add $330** - knob x lever.
- **Add $138** for each plate with KN (Knurl) edge details.
- For split finish orders, the face and strike plates are finished subject to door handing. **Add 10%** for split finish on all functions.

Hardware Schedule Example

		STYLE							
		EXTERIOR				INTERIOR			
FUNCTION DESCRIPTION	TYPE - FUNCTION	LEVER - KNOB HANDLE	ESCUTCHEON ROSETTE	CYLINDER E.E.	TRIM	LEVER - KNOB HANDLE	ESCUTCHEON ROSETTE	THUMB TURN CYLINDER	TRIM
ENTRY	ME-EN	25032	21501	CYL	NA	25032	21501	22009	NA
STOREROOM	ME-ST	25032	21501	CYL	NA	25032	21501	NA	NA
PATIO	ME-PT	25032	21501	NA	NA	25032	21501	22009	NA

Mortise Escutcheon Privacy & Passage Sets Small Plates

ME-PR Mortise Escutcheon - Privacy Set

Exterior Interior

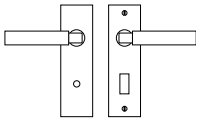

You Select

- **Knob or lever - exterior & interior**
- Small escutcheon - exterior & interior
- Emergency egress button
- Thumb turn

Tier level determined by the knob or lever for each set.

Included With Set

- Mortise lock - specify function and backset
- Mortise lock face plate
- Spindle
- Through bolts or surface mount screws
- Strike plate & dust box

Pricing

Code	Description & Notes	Tier I	Tier II	Tier III
ME-PR	Privacy Function	$1,086	$1,206	$1,385
	9839 - Standard - 2-7/8" cc spacing 9539 - No upcharge - 2-1/4" cc spacing 9139 - Add $220 LL - Subtract $330 - Less lock			

ME-PT Mortise Escutcheon - Patio Set

Exterior Interior

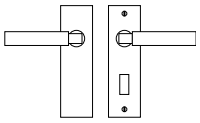

You Select

- **Knob or lever - exterior & interior**
- Small escutcheon - exterior & interior
- Thumb turn

Tier level determined by the knob or lever for each set.

Included With Set

- Mortise lock - specify function and backset
- Mortise lock face plate
- Spindle
- Through bolts or surface mount screws
- Strike plate & dust box

Pricing

Code	Description & Notes	Tier I	Tier II	Tier III
ME-PT	Patio Function	$855	$974	$1,153
	9839 - Standard - 2-7/8" cc spacing 9539 - No upcharge - 2-1/4" cc spacing 9139 - Add $220 LL - Subtract $330 - Less lock			

ME-PS Mortise Escutcheon - Passage Set

Exterior Interior

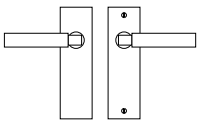

You Select

- **Knob or lever - exterior & interior**
- Small escutcheon - exterior & interior

Tier level determined by the knob or lever for each set.

Included With Set

- Mortise lock - specify function and backset
- Mortise lock face plate
- Spindle
- Through bolts or surface mount screws
- Strike plate & dust box

Pricing

Code	Description & Notes	Tier I	Tier II	Tier III
ME-PS	Passage Function	$1,009	$1,128	$1,307
	9825 - Standard 9525 - No upcharge 9125 - Add $110 LL - Subtract $330 - Less lock			

Mortise Escutcheon Privacy & Passage Sets Small Plates

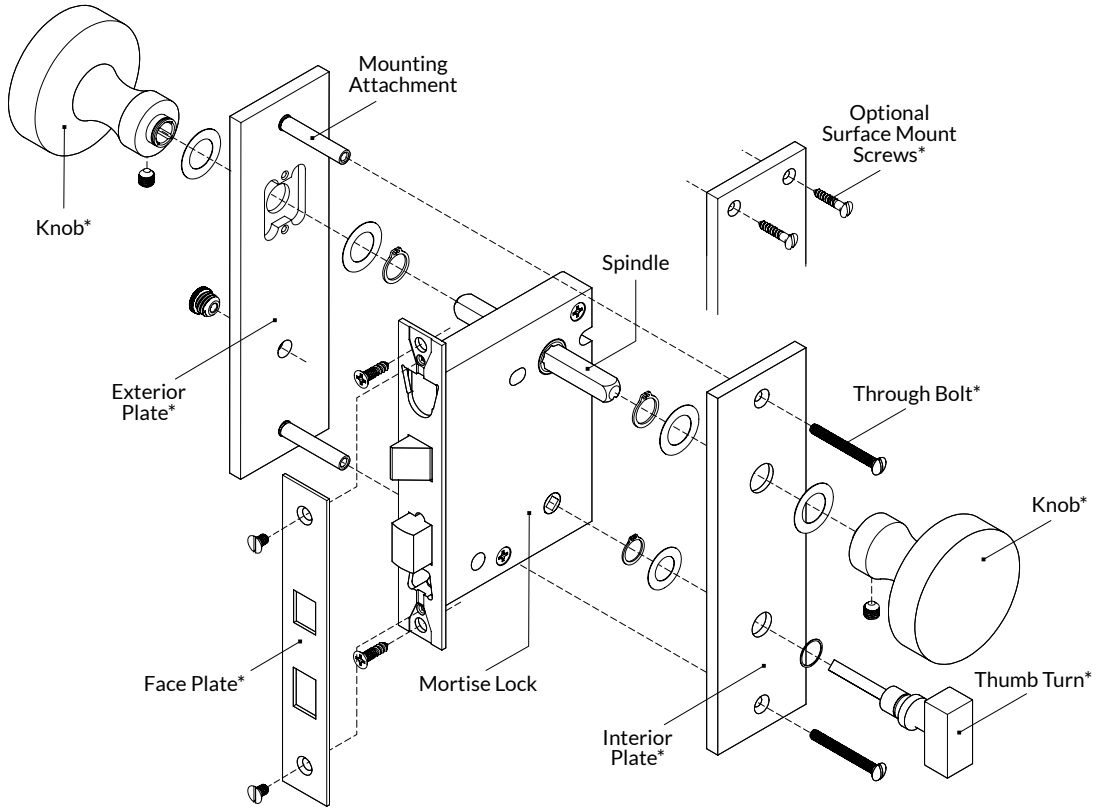

*Indicates Finished Parts

Mortise escutcheon privacy and passage sets are typically used on interior doors where a 9800 or 9500 series locks are recommended. These locks feature knob or lever high configuration, but can be ordered with the knob or lever low if desired.

- Base pricing for each set is determined by the tier level for the knob or lever. See ***Door Knobs*** or ***Door Levers*** section to select.
- Through bolting is standard for most escutcheon sets, but surface mount is available with no upcharge if requested.
- Spring assists are not typically required for mortise lock applications but are available upon request.
- 9800 or 9500 mortise locks are recommended for interior applications. Standard backsets: 2-1/2" or 2-3/4".
- 9000 or 9100 locks used for extended backsets: **Add $550** for 3-3/4" bkst | **Add $880** - 5" bkst | **Add $1,100** - 6" bkst.
- 8700 or 8800 locks used for narrow backsets: **Add $88** for 1-1/2", 1-3/4", 2" or 2-1/4".
- Electrified, marine grade and magnetic locks priced on application. See ***Locks & Latches*** section for more information.
- No upcharge - knob x knob upside down | **Add $99** - lever x lever upside down | **Add $330** - knob x lever.
- Extended lip strikes are available upon request. See the ***Forms & Supplements*** section for ordering form.
- **Add $138** for each plate with KN (Knurl) edge details.
- For split finish orders, the face and strike plates are finished subject to door handing. **Add 10%** for split finish on all functions.

Hardware Schedule Example

		STYLE							
		EXTERIOR				INTERIOR			
FUNCTION DESCRIPTION	TYPE - FUNCTION	LEVER - KNOB HANDLE	ESCUTCHEON ROSETTE	CYLINDER E.E.	TRIM	LEVER - KNOB HANDLE	ESCUTCHEON ROSETTE	THUMB TURN CYLINDER	TRIM
PRIVACY	ME-PR	25032	21513	22006	NA	25032	21513	22009	NA
PATIO	ME-PT	25032	21513	NA	NA	25032	21513	22009	NA
PASSAGE	ME-PS	25032	21513	NA	NA	25032	21513	NA	NA

Mortise or Tubular Escutcheon Full & Half Dummy Sets

ME-FD | TE-FD Escutcheon - Full Dummy Set

Exterior Interior

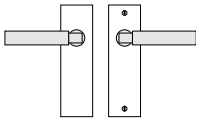

You Select

- **Knob or lever - exterior & interior**
- Small escutcheon - exterior & interior

Tier level determined by the knob or lever for each set.

Included With Set

- Escutcheon dummy mounting assembly
- Through bolts or surface mount screws
- Dummy face plate - pre-bored doors only

Pricing

Code	Description & Notes	Tier I	Tier II	Tier III
ME-FD	Full Dummy Function	$708	$830	$1,008

ME-HD | TE-HD Escutcheon - Half Dummy Set

Exterior Interior

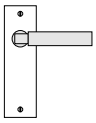

You Select

- **Knob or lever - exterior & interior**
- Small escutcheon - exterior & interior

Tier level determined by the knob or lever for each set.

Included With Set

- Escutcheon dummy mounting assembly
- Surface mount screws

Pricing

Code	Description & Notes	Tier I	Tier II	Tier III
ME-HD	Patio Function	$354	$415	$504

Escutcheon full and half dummy sets feature fixed knobs or levers. ***These sets are identical for mortise or tubular applications.***

- Pricing for each set is determined by the tier level for the knob or lever. See ***Door Knobs*** or ***Door Levers*** section to select. There is no upcharge for medium plate sets.
- Through bolting is standard for escutcheon sets. Surface mount is available with no upcharge if requested. Specify handing for lever sets. Half dummy plates must use surface mount screws.
- Full dummy sets consist of two half dummy plates mounted on either side of the door. Door handing must be specified for every half dummy lever set.
- Full dummy sets can be installed on pre-bored doors, but the plate must be large enough to cover the bore in the door. A dummy face plate is provided for the door edge.
- **Add $138** for each plate with KN (Knurl) edge details.
- **Add 10%** for split finishes on full dummy sets.

Mortise or Tubular Escutcheon Full & Half Dummy Sets

ME-FD | TE-FD Escutcheon - Full Dummy Set

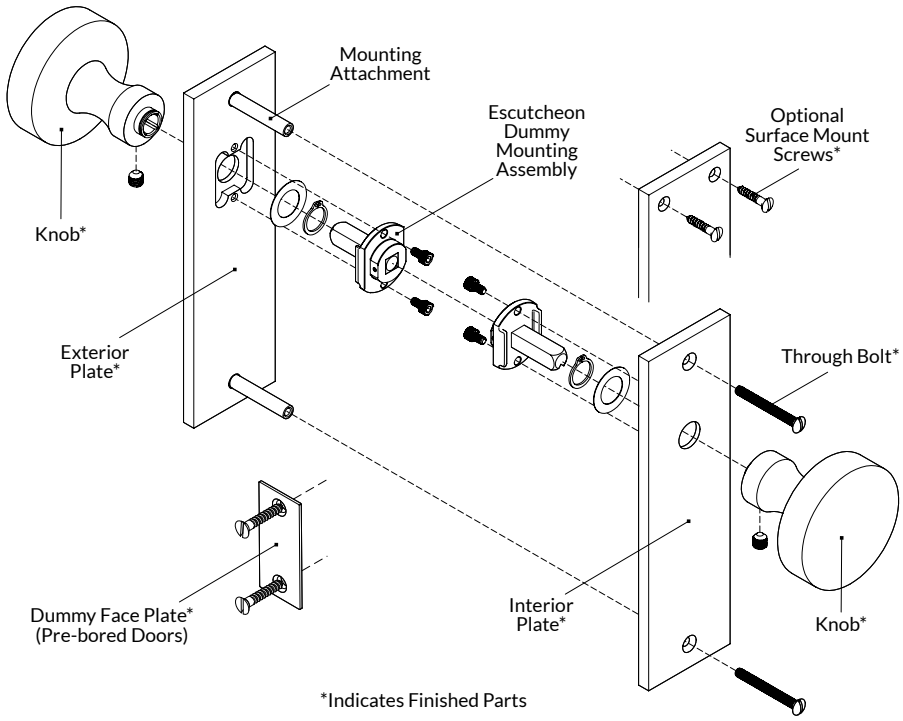

ME-HD | TE-FD Escutcheon - Half Dummy

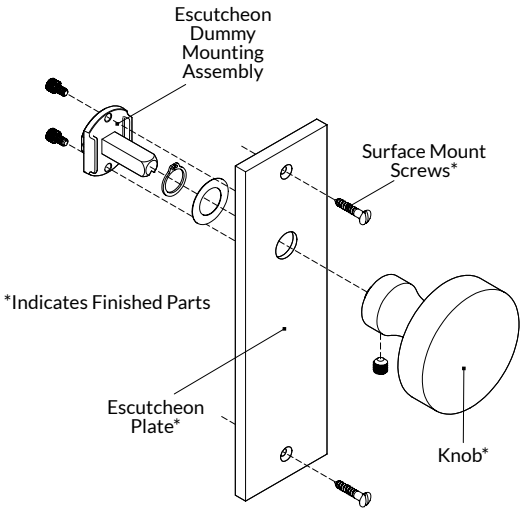

Escutcheon full and half dummy sets feature fixed knobs or levers. *These sets are identical for mortise or tubular applications.*

Hardware Schedule Example

		STYLE							
		EXTERIOR				INTERIOR			
FUNCTION DESCRIPTION	TYPE - FUNCTION	LEVER - KNOB HANDLE	ESCUTCHEON ROSETTE	CYLINDER E.E.	TRIM	LEVER - KNOB HANDLE	ESCUTCHEON ROSETTE	THUMB TURN CYLINDER	TRIM
FULL DUMMY	ME-FD TE-FD	25032	21513	NA	NA	25032	21513	NA	NA
HALF DUMMY	ME-HD TE-FD	25032	21513	NA	NA	NA	NA	NA	NA

Mortise Sectional Entry Sets

MS-EN Mortise Sectional - Entry Set

Exterior Interior

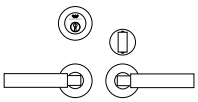

You Select

- **Knob or lever - exterior & interior**
- Rosette - exterior & interior
- Mortise cylinder collar - exterior
- Mortise bolt trim plate - interior
- Thumb turn

Tier level determined by the knob or lever for each set.

Included With Set

- Mortise lock - specify function and backset
- Mortise lock face plate
- Rosette mounting plate - exterior & interior
- Rosette mounting hub - exterior & interior
- Spindle
- Mortise bolt mounting components*
- Mortise cylinder
- Cylinder blocking ring - exterior (if required)
- Strike plate & dust box

* Determined by trim selected.

Pricing

Code	Description & Notes	Tier I	Tier II	Tier III
MS-EN	Entry Function	$1,112	$1,232	$1,410
	9148 - No upcharge - Includes toggle to unlock exterior 9149 - Standard - Includes toggle to lock exterior 9167 - Add $55 - Includes toggle to unlock exterior & auxiliary latch 9169 - Add $55 - Includes toggle to lock exterior & auxiliary latch 9124 - Subtract $55 - No toggle LL - Subtract $550 - Less lock			

MS-ST Mortise Sectional - Storeroom Set

Exterior Interior

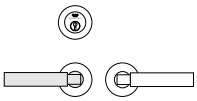

You Select

- **Knob or lever - exterior & interior**
- Rosette - exterior & interior
- Mortise cylinder collar - exterior

Tier level determined by the knob or lever for each set.

Included With Set

- Mortise lock - specify function and backset
- Mortise lock face plate
- Rosette mounting plate - exterior & interior
- Rosette mounting hub - exterior & interior
- Spindle
- Mortise cylinder
- Cylinder blocking ring - exterior (if required)
- Strike plate & dust box

Pricing

Code	Description & Notes	Tier I	Tier II	Tier III
MS-ST	Entry Function	$1,056	$1,176	$1,354
	9159 - Standard - fixed exterior knob or lever - Includes auxiliary latch 9124 - No upcharge - active knobs or levers - includes bolt and latch only LL - Subtract $495 - Less lock			

MS-PT Mortise Sectional - Patio Set

Exterior Interior

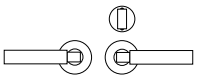

You Select

- **Knob or lever - exterior & interior**
- Rosette - exterior & interior
- Mortise bolt trim plate - interior
- Thumb turn

Tier level determined by the knob or lever for each set.

Included With Set

- Mortise lock - specify function and backset
- Mortise lock face plate
- Rosette mounting plate - exterior & interior
- Rosette mounting hub - exterior & interior
- Spindle
- Mortise bolt mounting components*
- Strike plate & dust box

* Determined by trim selected.

Pricing

Code	Description & Notes	Tier I	Tier II	Tier III
MS-PT	Entry Function	$1,056	$1,176	$1,354
	9139 - Standard 9839 - Subtract $220 - recommended for interior doors LL - Subtract $495 - Less lock			

Mortise Sectional Entry Sets

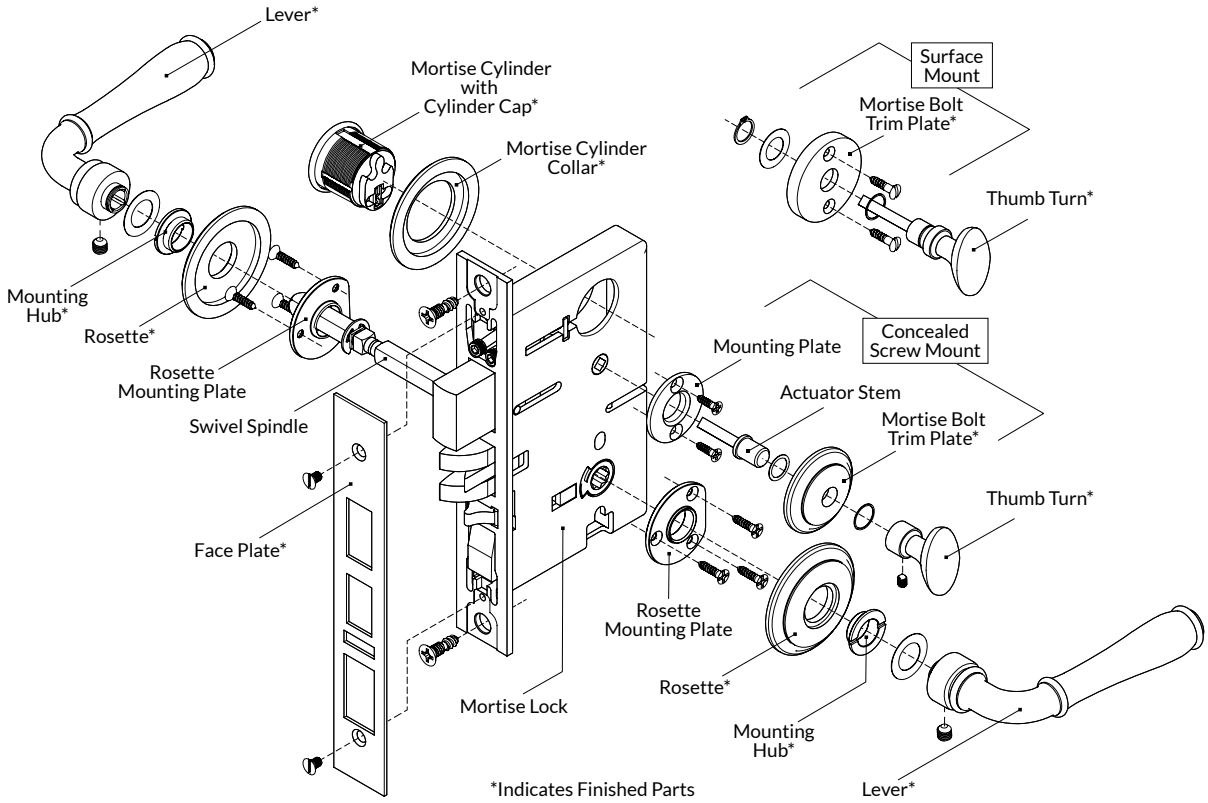

A mortise sectional entry set features a mortise lock body. Entry sets are typically used on exterior doors where a 9000 / 9100 series lock is recommended.

- Pricing for each set is determined by the tier level for the knob or lever. See ***Door Knobs*** or ***Door Levers*** section to select.
- 9000 & 9100 mortise locks are recommended for exterior applications. Standard backsets: 2-1/2" & 2-3/4". **Add $550** for 3-3/4" backset | **Add $880** - 5" backset | **Add $1,100** - 6" backset. Electrified, marine grade and magnetic locks priced on application. See ***Locks & Latches*** section for more information.
- 8700 & 8800 mortise locks can be used for narrow backsets: **Add $88** for 1-1/2", 1-3/4", 2" or 2-1/4".
- Spring assists are not typically required for sectional mortise lock applications. If desired, a spring assist is available with standard mortise locks. Large rosettes are required. Not available with 8500 / 8600 series locks. See the ***Rosettes & Cylinder Collars*** section to select.
- Extended lip strikes are available upon request. See the ***Forms & Supplements*** section for ordering form.
- For split finish orders, the face and strike plates are finished subject to door handing. **Add 10%** for split finish on all functions.

Sectional Dummy Sets

- Sectional dummy sets are the same for tubular or mortise lock applications. See ***TS-PS & TS-HD*** for details and pricing.

Hardware Schedule Example

		STYLE							
		EXTERIOR				INTERIOR			
FUNCTION DESCRIPTION	TYPE - FUNCTION	LEVER - KNOB HANDLE	ESCUTCHEON ROSETTE	CYLINDER E.E.	TRIM	LEVER - KNOB HANDLE	ESCUTCHEON ROSETTE	THUMB TURN CYLINDER	TRIM
ENTRY	MS-EN	23015	20014	CYL	20014	23015	20014	22004	20018
STOREROOM	MS-ST	23015	20014	CYL	20014	23015	20014	NA	NA
PATIO	MS-PT	23015	20014	NA	NA	23015	20014	22004	20018

Mortise Sectional Privacy & Passage Sets

MS-PR Mortise Sectional - Privacy Set

Exterior Interior

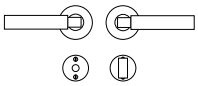

You Select

- **Knob or lever - exterior & interior**
- Rosette - exterior & interior
- Emergency egress trim plate - exterior
- Mortise bolt trim plate - interior
- Emergency egress button
- Thumb turn

Tier level determined by the knob or lever for each set.

Included With Set

- Mortise lock - specify function and backset
- Mortise lock face plate
- Rosette mounting plate - exterior & interior
- Rosette mounting hub - exterior & interior
- Spindle
- Emergency egress mounting components*
- Mortise bolt mounting components*
- Strike plate & dust box

* Determined by trim selected.

Pricing

Code	Description & Notes	Tier I	Tier II	Tier III
MS-EN	Entry Function	$865	$983	$1,163
	9839 - Standard 9539 - No Upcharge 9139 - Add $220 LL - Subtract $330 - Less lock			

MS-PS Mortise Sectional - Passage Set

Exterior Interior

You Select

- **Knob or lever - exterior & interior**
- Rosette - exterior & interior

Tier level determined by the knob or lever for each set.

Included With Set

- Mortise lock - specify function and backset
- Mortise lock face plate
- Rosette mounting plate - exterior & interior
- Rosette mounting hub - exterior & interior
- Spindle
- Strike plate & dust box

Pricing

Code	Description & Notes	Tier I	Tier II	Tier III
MS-PS	Function	$794	$913	$1,092
	9825 - Standard 9525 - No upcharge 9125 - Add $110 LL - Subtract $330 - Less lock			

Mortise Sectional Privacy & Passage Sets

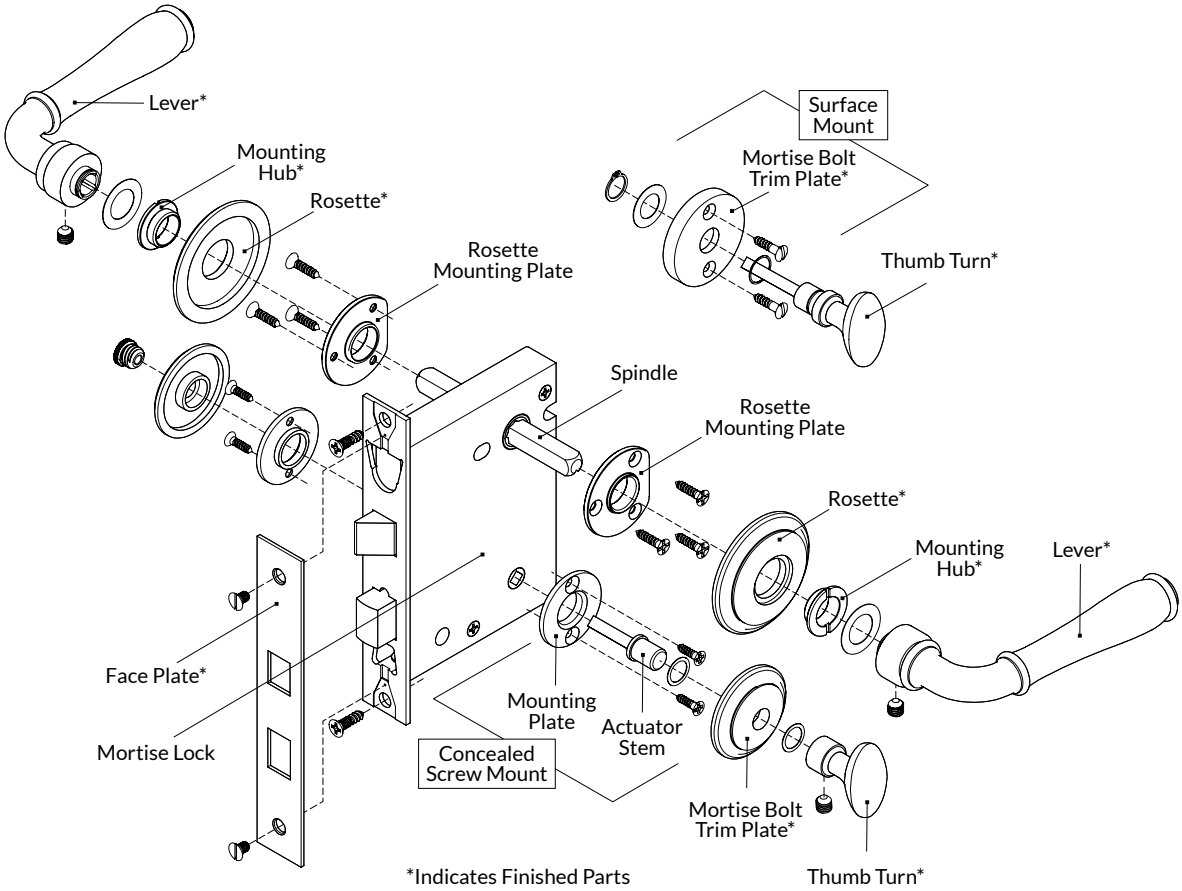

Mortise sectional privacy and passage sets features a mortise lock body. These sets are typically used on interior doors.

- Pricing for each set is determined by the tier level for the knob or lever. See ***Door Knobs*** or ***Door Levers*** section to select.
- 9800 series mortise locks are recommended for interior door applications. Available backsets are 2-1/2" & 2-3/4". The lock is configured knob/lever high (standard) or can be ordered knob/lever low. The spindle to thumb turn spacing is 2-7/8".
- 9500 series mortise locks can be used, but feature a smaller 2-1/4" spacing between the spindle and thumb turn.
- 9000 or 9100 locks used for extended backsets: **Add $550** for 3-3/4" bkst | **Add $880** - 5" bkst | **Add $1,100** - 6" bkst.
- 8700 or 8800 locks used for narrow backsets: **Add $88** for 1-1/2", 1-3/4", 2" or 2-1/4".
- No upcharge - knob x knob upside down | **Add $99** - lever x lever upside down | **Add $330** - knob x lever.
- Spring assists are not typically required for sectional mortise lock applications, but available upon request. Large rosettes are required. See the ***Rosettes & Cylinder Collars*** section to select.
- Extended lip strikes are available upon request. See the ***Forms & Supplements*** section for ordering form.
- For split finish orders, the face and strike plates are finished subject to door handing. **Add 10%** for split finish on all functions.

Hardware Schedule Example

		STYLE							
		EXTERIOR				INTERIOR			
FUNCTION DESCRIPTION	TYPE - FUNCTION	LEVER - KNOB HANDLE	ESCUTCHEON ROSETTE	CYLINDER E.E.	TRIM	LEVER - KNOB HANDLE	ESCUTCHEON ROSETTE	THUMB TURN CYLINDER	TRIM
PRIVACY	MS-PR	23015	20014	22005	20018	23015	20014	22004	20018
PASSAGE	MS-PS	23015	20014	NA	NA	23015	20014	NA	NA

Tubular Entry Handle Sets

TTKL-EN Tubular Entry Handle Set - Entry Set

Exterior Interior

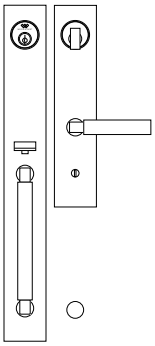

You Select

- **Entry handle - exterior**
- **Knob or lever - interior**
- Large escutcheon - exterior
- Medium escutcheon - interior
- Thumb turn - interior

  Optional:
- Standard deadbolt trim - interior
- Exposed screw deadbolt trim - interior

Pricing tier determined by the highest tier level of the entry handle, lever, or knob.

Included With Set

- Tubular passage latch - specify backset
- Tubular auxiliary deadbolt - specify backset
- Thumbpiece - exterior
- Half spindle
- Through bolts
- Through bolt cover
- Deadbolt cylinder with cylinder cap
- Deadbolt mounting trim - exterior & interior
- Strike plates & dust boxes - specify T-strike or full lip strike - extended lips strikes available
- Optional exposed screw interior deadbolt trim

Pricing

Code	Description & Notes	Tier I	Tier II	Tier III
TTKL-EN	Entry Function	$1,415	$1,533	$1,713
	LV001 - Level Invisible Smart Lock Kit - **Add $*** **			

TTKL-FD Tubular Entry Handle Set - Full Dummy Set

Exterior Interior

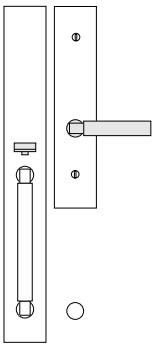

You Select

- **Entry handle - exterior**
- **Knob or lever - interior**
- Large escutcheon - exterior
- Medium escutcheon - interior
- Thumb turn - interior

  Optional:
- Standard deadbolt trim - interior
- Exposed screw deadbolt trim - interior

Pricing tier determined by the highest tier level of the entry handle, lever, or knob.

Included With Set

- Mortise lock - specify function and backset
- Mortise lock face plate
- Fixed thumbpiece - exterior
- Half spindle
- Through bolts\
- Through bolt cover
- Strike plate & dust box

Pricing

Code	Description & Notes	Tier I	Tier II	Tier III
TTKL-FD	Full Dummy Function	$991	$1,110	$1,289

A tubular entry handle set is intended for pre-drilled doors and features a mechanism that transfers the up and down motion of the thumbpiece to a rotary motion that activates the tubular latch. This 'T2T' (Thumbpiece to Tubular) assembly requires unique door preparation as shown in the installation template provided with your order.

As with all tubular sets, the available backsets are 2-3/8" or 2-3/4". A spring assist is provided for the interior knob or lever.

The full dummy set features a fixed thumbpiece and lever or knob. It is intended for double door sets with one inactive leaf. See the ***Entry Handle Dummy Sets*** page for a diagram of this assembly.

Tubular Entry Handle Sets

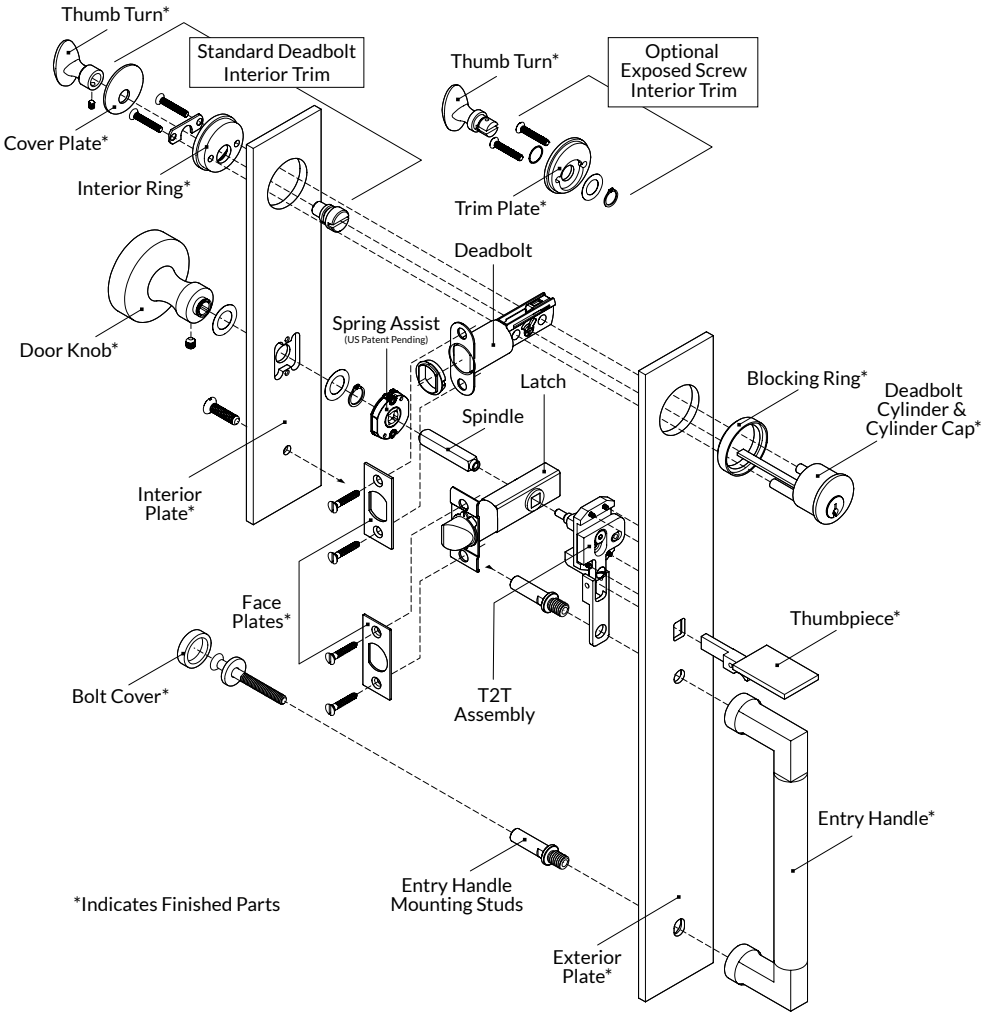

Tubular thumbpiece x knob or lever sets are used on exterior doors that have been pre-drilled for tubular applications. Not available on doors under 1-3/4" thickness. Special door preparation is required to install this hardware.

- Through bolting is required for these escutcheon sets.
- Unless otherwise requested, the thumbpiece is paired with the corresponding entry handle.
- "T" or full lip strikes are available for the tubular latch. Extended lip strikes are available upon request. See the ***Forms & Supplements*** section for ordering form.
- The auxiliary deadbolt is provided with a re-enforced sub strike plate for added security.
- Available tubular backsets: 2-3/8" or 2-3/4". Standard latch to deadbolt spacing is 5-1/2". Custom spacing priced upon request. Verify center to center spacing before ordering.
- **Add $138** for each plate with KN (Knurl) edge details.
- For split finish orders, the face and strike plates are finished subject to door handing. **Add 10%** for split finish on all functions.

Hardware Schedule Example

		STYLE							
		EXTERIOR				INTERIOR			
FUNCTION DESCRIPTION	TYPE - FUNCTION	LEVER - KNOB HANDLE	ESCUTCHEON ROSETTE	CYLINDER E.E.	TRIM	LEVER - KNOB HANDLE	ESCUTCHEON ROSETTE	THUMB TURN CYLINDER	TRIM
ENTRY	TTKL-EN	7813	21500	CYL	NA	25032	21501	22004	NA
FULL DUMMY	TTKL-FD	7813	21500	NA	NA	25032	21501	NA	NA

Tubular Escutcheon Entry Sets
Medium Plates

TE-EN Tubular Escutcheon Entry Set

Exterior Interior

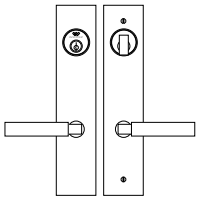

You Select

- **Knob or lever - exterior & interior**
- Medium escutcheon - exterior & interior
- Thumb turn
- Latch strike plate - specify "T" or full lip

Optional:

- Standard deadbolt trim - interior
- Exposed screw deadbolt trim - interior

Tier level determined by the knob or lever for each set.

Included With Set

- Through bolts or surface mount screws

Tubular passage components:

- Passage latch with face plate - specify backset
- Escutcheon spring assist assembly
- Spindle

Tubular deadbolt components:

- Deadbolt with face plate - specify backset
- Deadbolt cylinder
- Cylinder blocking ring - exterior
- Strike plates & dust boxes

Pricing

Code	Description & Notes	Tier I	Tier II	Tier III
TE-EN	Entry Function - Latch x Auxiliary Deadbolt	$937	$1,056	$1,235
	LV001 - Level Invisible Smart Lock Kit - **Add $*** **			

TE-PT Tubular Escutcheon Patio Set

Exterior Interior

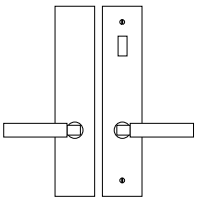

You Select

- **Knob or lever - exterior & interior**
- Medium escutcheon - exterior & interior
- Thumb turn
- Latch strike plate - specify "T" or full lip

Tier level determined by the knob or lever for each set.

Included With Set

- Through bolts or surface mount screws

Tubular passage components:

- Passage latch with face plate - specify backset
- Escutcheon spring assist assembly
- Spindle

Tubular deadbolt components:

- Deadbolt with face plate - specify backset
- Strike plates & dust boxes

Pricing

Code	Description & Notes	Tier I	Tier II	Tier III
TE-PT	Patio Function - Latch x Auxiliary Deadbolt	$847	$967	$1,146

TE-PS Tubular Escutcheon Passage Set

Exterior Interior

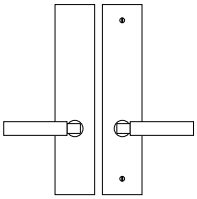

You Select

- **Knob or lever - exterior & interior**
- Escutcheon - exterior & interior
- Latch strike plate - specify "T" or full lip

Tier level determined by the knob or lever for each set.

Included With Set

- Through bolts or surface mount screws

Tubular passage components:

- Passage latch with face plate - specify backset
- Escutcheon spring assist assembly
- Spindle
- Strike plates & dust box

Pricing

Code	Description & Notes	Tier I	Tier II	Tier III
TE-PS	Passage Function	$769	$888	$1,067

Tubular Escutcheon Entry Sets
Medium Plates

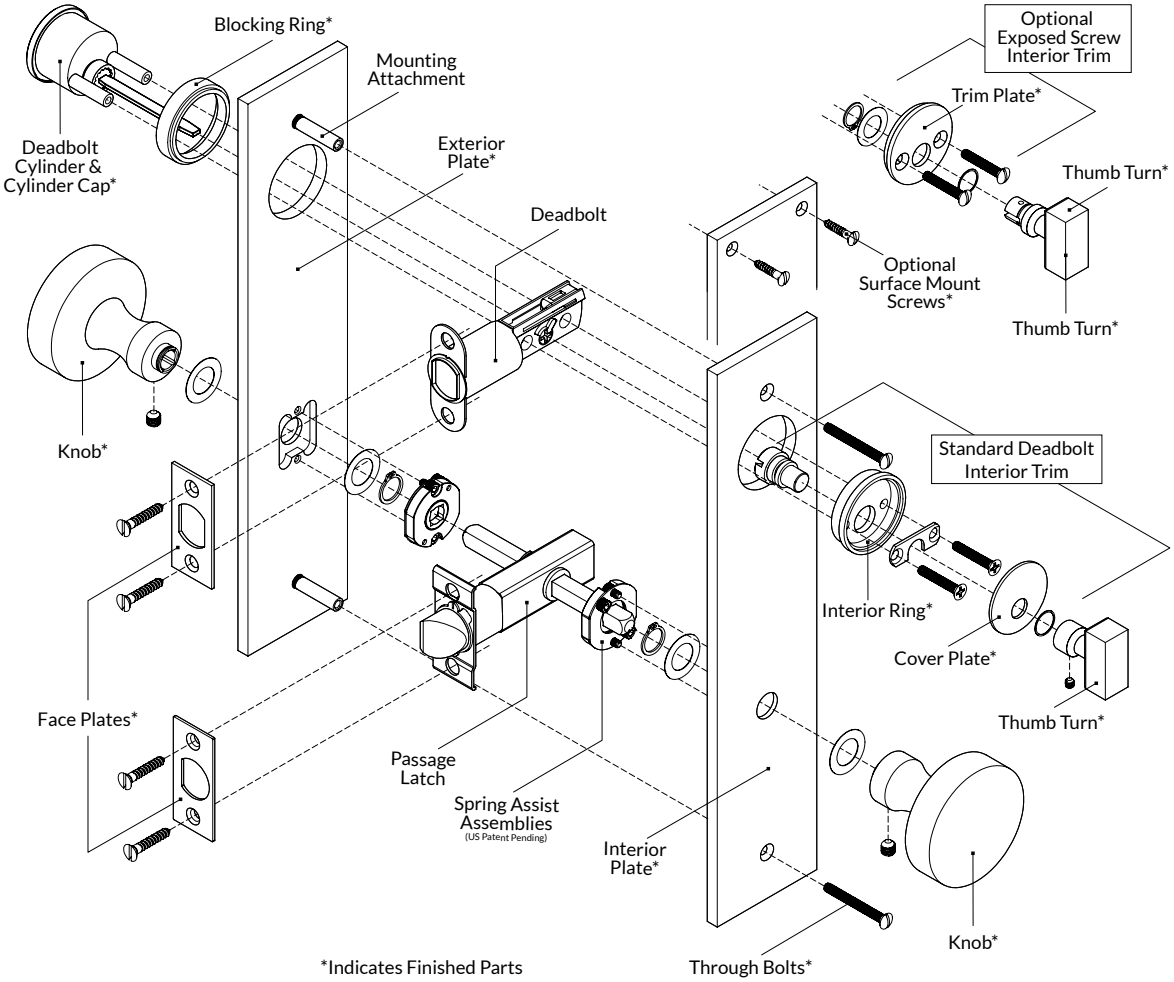

A tubular escutcheon entry set features a passage latch for knob or lever, coupled with an auxiliary deadbolt. Standard latch to deadbolt spacing is 5-1/2". Custom spacing priced upon request. Verify center to center spacing before ordering.

- Pricing for each set is determined by the tier level for the knob or lever. See ***Door Knobs*** or ***Door Levers*** section to select.
- Available backsets for tubular latches and deadbolts: 2-3/8" or 2-3/4".
- Deadbolts are provided with re-enforced sub strike plate for added security.
- "T" or full lip strike plates are available for tubular latch sets. See the ***Additional Hardware*** section to select.
- Extended lip strikes are available upon request. See the ***Forms & Supplements*** section for ordering form.
- **Add $138** for each plate with KN (Knurl) edge details.
- For split finish orders, the face and strike plates are finished subject to door handing. **Add 10%** for split finish on all functions.

Hardware Schedule Example

		STYLE							
		EXTERIOR				INTERIOR			
FUNCTION DESCRIPTION	TYPE - FUNCTION	LEVER - KNOB HANDLE	ESCUTCHEON ROSETTE	CYLINDER E.E.	TRIM	LEVER - KNOB HANDLE	ESCUTCHEON ROSETTE	THUMB TURN CYLINDER	TRIM
ENTRY	TE-EN	25032	21501	CYL	NA	25032	21501	22009	NA
PATIO	TE-PT	25032	21501	NA	NA	25032	21501	22009	NA
PASSAGE	TE-PS	25032	21501	NA	NA	25032	21501	NA	NA

Tubular Escutcheon Privacy, Patio & Passage Sets - Small Plates

TE-PR Tubular Escutcheon Privacy Set

Exterior Interior

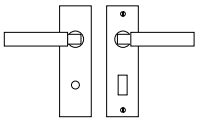

You Select

- **Knob or lever - exterior & interior**
- Small escutcheon - exterior & interior
- Emergency egress button
- Thumb turn
- Latch strike plate - specify "T" or full lip

Tier level determined by the knob or lever for each set.

Included With Set

- Passage latch with face plate - specify backset
- Mortise bolt with face plate (same backset)
- Through bolts or surface mount screws
- Mortise bolt strike plate & dust boxes

Pricing

Code	Description & Notes	Tier I	Tier II	Tier III
TE-PR	Privacy Function	$877	$997	$1,176

TE-PT Tubular Escutcheon Patio Set

Exterior Interior

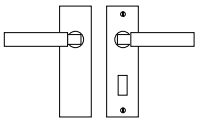

You Select

- **Knob or lever - exterior & interior**
- Small escutcheon - exterior & interior
- Thumb turn
- Latch strike plate - specify "T" or full lip

Tier level determined by the knob or lever for each set.

Included With Set

- Passage latch with face plate - specify backset
- Mortise bolt with face plate (same backset)
- Through bolts or surface mount screws
- Mortise bolt strike plate & dust boxes

Pricing

Code	Description & Notes	Tier I	Tier II	Tier III
TE-PT	Patio Function	$847	$967	$1,146

TE-PS Tubular Escutcheon Passage Set

Exterior Interior

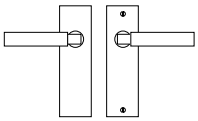

You Select

- **Knob or lever - exterior & interior**
- Small escutcheon - exterior & interior
- Latch strike plate - specify "T" or full lip

Tier level determined by the knob or lever for each set.

Included With Set

- Passage latch with face plate - specify backset
- Through bolts or surface mount screws
- Dust box

Pricing

Code	Description & Notes	Tier I	Tier II	Tier III
TE-PS	Passage Function	$769	$888	$1,067

A tubular escutcheon set features a standard passage latch for knob or lever. This may be coupled with a tubular mortise bolt for privacy or patio applications. The spacing between the latch and mortise bolt can vary to match existing door preparations. Sets may be configured with the knob or lever high (standard) or low. Specify the spindle location and verify the center to center measurements when ordering.

- Pricing for each set is determined by the tier level for the knob or lever. See ***Door Knobs*** or ***Door Levers*** section to select. Small escutcheons are standard for these sets, but a medium escutcheon may be substituted for no additional cost.
- Through bolting is standard for most escutcheon sets, but surface mount is available with no upcharge if requested.
- Available backsets for tubular latches and mortise bolts: 2-3/8" or 2-3/4".
- Spring assist units are provided standard with tubular latches.
- T-strike or full lip strike plates are available for tubular latch sets. See the ***Additional Hardware*** section to select. Extended lip strikes are available upon request. See the ***Forms & Supplements*** section for ordering form.
- Tubular privacy sets include a emergency release key.
- For split finish orders, the face and strike plates are finished subject to door handing. **Add 10%** for split finish on all functions.
- **Add $138** for each plate with KN (Knurl) edge details.
- For full and half dummy escutcheon sets, refer to section ME-FD & ME-HD.

Tubular Escutcheon Privacy, Patio & Passage Sets - Small Plates

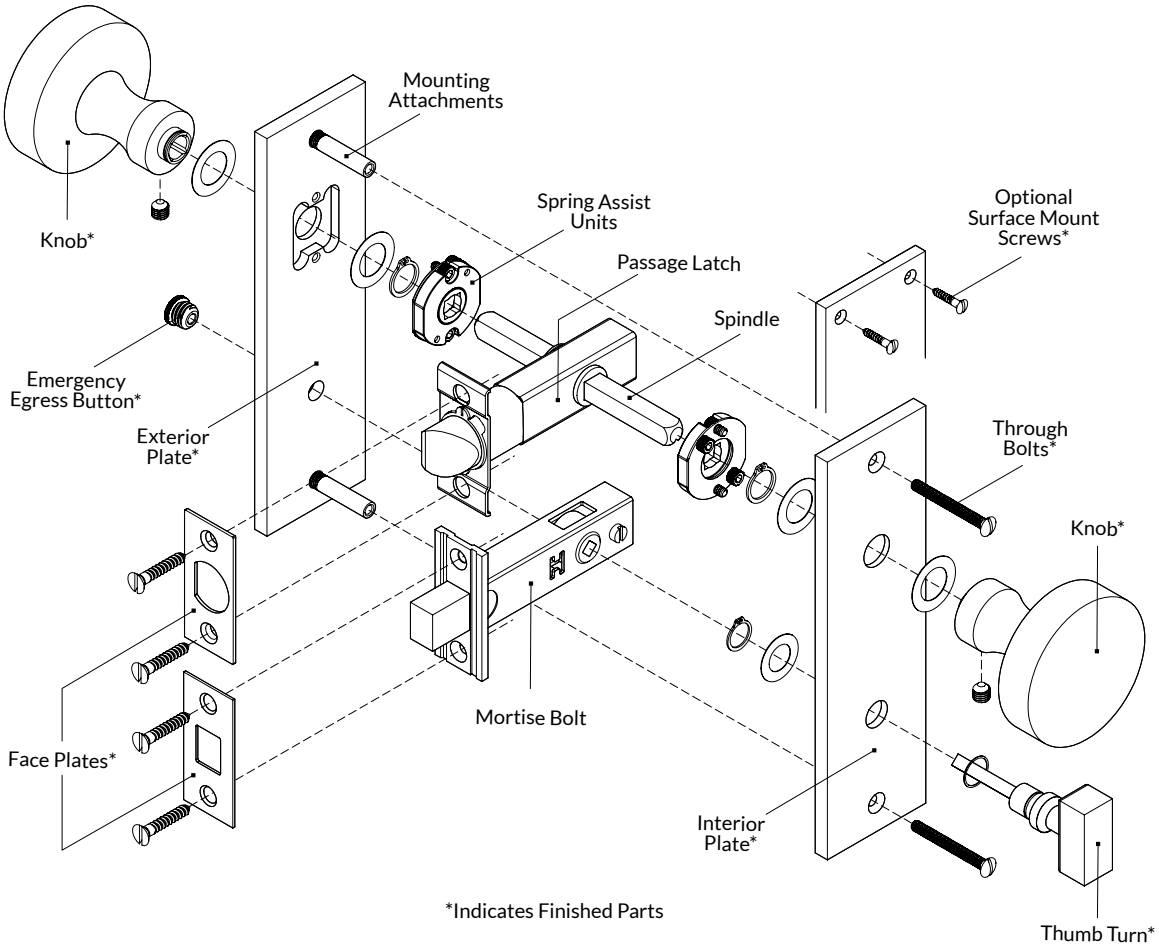

*Indicates Finished Parts

Hardware Schedule Example

		STYLE							
		EXTERIOR				INTERIOR			
FUNCTION DESCRIPTION	TYPE - FUNCTION	LEVER - KNOB HANDLE	ESCUTCHEON ROSETTE	CYLINDER E.E.	TRIM	LEVER - KNOB HANDLE	ESCUTCHEON ROSETTE	THUMB TURN CYLINDER	TRIM
PRIVACY	TE-PR	25032	21513	22006	NA	25032	21513	22009	NA
PATIO	TE-PT	25032	21513	NA	NA	25032	21513	22009	NA
PASSAGE	TE-PS	25032	21513	NA	NA	25032	21513	NA	NA

Tubular Sectional Entry Set

TS-EN Tubular Sectional - Entry Set

Exterior Interior

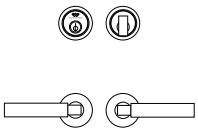

You Select

Tubular passage components:
- **Knob or lever - exterior & interior**
- Rosette - exterior & interior

Tubular deadbolt components:
- Deadbolt collar - exterior
- Deadbolt collar - interior
- Thumb turn

Optional:
- Standard deadbolt trim - interior
- Exposed screw deadbolt trim - interior

Tier level determined by the knob or lever for each set.

Included With Set

Tubular passage components:
- Passage latch with face plate - specify backset
- Rosette mounting with spring assist assembly
- Rosette mounting hub - exterior & interior
- Spindle

Tubular deadbolt components:
- Deadbolt with face plate - specify backset
- Deadbolt cylinder
- Cylinder blocking ring - exterior
- Strike plates & dust boxes

Pricing

Code	Description & Notes	Tier I	Tier II	Tier III
TS-EN	Entry Function	$865	$983	$1,163
	LV001 - Level Invisible Smart Lock Kit - **Add $*** **			

TS-CC Tubular Sectional - Cylinder x Cylinder Entry Set

Exterior Interior

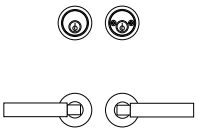

You Select

Tubular passage components:
- **Knob or lever - exterior & interior**
- Rosette - exterior & interior

Tubular deadbolt components:
- Deadbolt collar - exterior
- Deadbolt collar - interior

Tier level determined by the knob or lever for each set.

Included With Set

Tubular passage components:
- Passage latch with face plate - specify backset
- Rosette mounting with spring assist assembly
- Rosette mounting hub - exterior & interior
- Spindle

Tubular deadbolt components:
- Deadbolt with face plate - specify backset
- Deadbolt cylinders with through bolts
- Cylinder blocking ring - exterior & interior
- Strike plates & dust boxes

Pricing

Code	Description & Notes	Tier I	Tier II	Tier III
TS-CC	Cylinder x Cylinder Entry Function	$865	$983	$1,163
	LV001 - Level Invisible Smart Lock Kit - **Add $*** **			

A tubular sectional entry set features a standard passage latch for knob or lever, coupled with an auxiliary deadbolt set. The spacing between the latch and deadbolt can vary to match existing door preparations.

- Pricing for each set is determined by the tier level for the knob or lever. See ***Door Knobs*** or ***Door Levers*** section to select.
- Available backsets for tubular latches and deadbolts: 2-3/8" or 2-3/4".
- Large rosettes and collars required for pre-bored doors. See the ***Rosettes & Cylinder Collars*** section to select.
- Cylinder x cylinder sets require exposed screws on the interior cylinder. A key is required to lock or unlock from either side of the door.
- Mounting plates with spring assists come standard for all sets using tubular latches. Not available on doors under 1-3/8" thick. See the ***Mounting Hardware*** section for more information.
- Deadbolts are provided with re-enforced sub strike plate for added security.
- "T" strike or full lip strike plates are available for tubular latch sets. See the ***Additional Hardware*** section to select.
- Extended lip strikes are available upon request. See the ***Forms & Supplements*** section for ordering form.
- For split finish orders, the face and strike plates are finished subject to door handing. **Add 10%** for split finish on all functions.

Tubular Sectional Entry Set

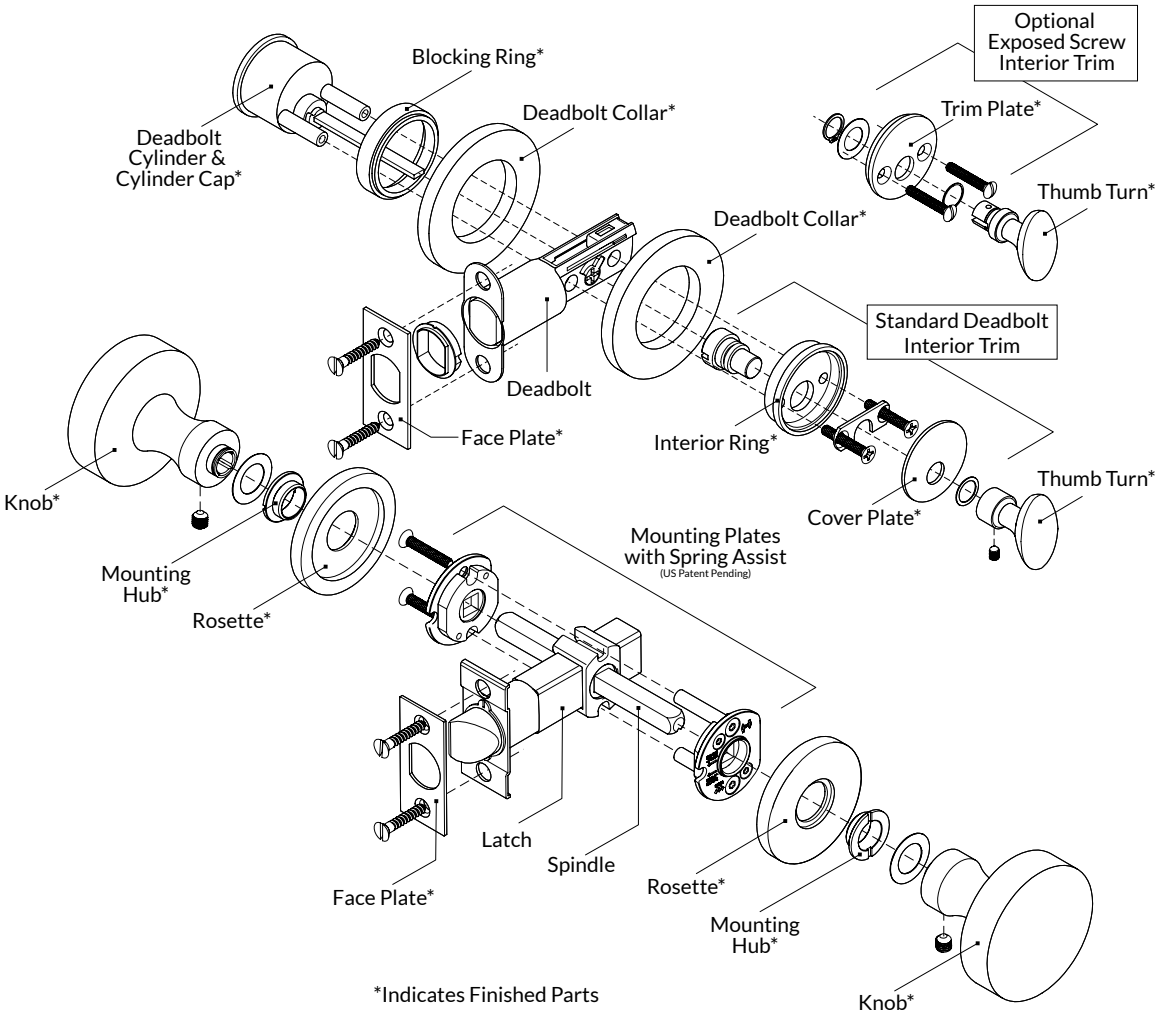

Hardware Schedule Example

		STYLE							
		EXTERIOR				INTERIOR			
FUNCTION DESCRIPTION	TYPE - FUNCTION	LEVER - KNOB HANDLE	ESCUTCHEON ROSETTE	CYLINDER E.E.	TRIM	LEVER - KNOB HANDLE	ESCUTCHEON ROSETTE	THUMB TURN CYLINDER	TRIM
ENTRY	TS-EN	25032	20057	CYL	20057	25032	20057	22009	20057
ENTRY - CYL X CYL	TS-CC	25032	20057	CYL	20057	25032	20057	CYL	20057

Tubular Sectional Privacy Sets

TS-PR Tubular Sectional - Privacy Set

Exterior Interior

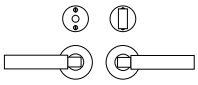

You Select

Tubular passage components:
- **Knob or lever - exterior & interior**
- Rosette - exterior & interior
- T-strike or full lip strike plate & dust box

Tubular mortise bolt components:
- Emergency egress trim plate - exterior
- Emergency egress button
- Mortise bolt trim plate - interior
- Thumb turn

Tier level determined by the knob or lever for each set.

Included With Set

Tubular passage components:
- Passage latch with face plate - specify backset
- Rosette mounting with spring assist assembly
- Rosette mounting hub - exterior & interior
- Spindle

Tubular mortise bolt components:
- Deadbolt with face plate - specify backset
- Strike plate & dust box

Pricing

Code	Description & Notes	Tier I	Tier II	Tier III
TS-PR	Tubular Sectional - Privacy Function	$675	$795	$974

TS-PT Tubular Sectional - Patio Set

Exterior Interior

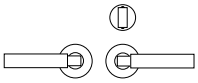

You Select

Tubular passage components:
- **Knob or lever - exterior & interior**
- Rosette - exterior & interior
- T-strike or full lip strike plate & dust box

Tubular mortise bolt components:
- Mortise bolt trim plate - interior
- Thumb turn

Tier level determined by the knob or lever for each set.

Included With Set

Tubular passage components:
- Passage latch with face plate - specify backset
- Rosette mounting with spring assist assembly
- Rosette mounting hub - exterior & interior
- Spindle

Tubular mortise bolt components:
- Deadbolt with face plate - specify backset
- Strike plate & dust box

Pricing

Code	Description & Notes	Tier I	Tier II	Tier III
TS-PT	Tubular Sectional Patio Function	$628	$747	$926

TS-PU Tubular Sectional - Push Pin Privacy Set

Exterior Interior

You Select

Tubular privacy components:
- **Knob or lever - exterior & interior**
- Privacy Rosette - exterior & interior
- T-strike or full lip strike plate & dust box

Tier level determined by the knob or lever for each set.

Included With Set

Tubular passage components:
- Privacy latch with face plate - specify backset
- Rosette mounting with spring assist assembly
- Rosette mounting hub - exterior & interior
- Privacy pin
- Spindle

Pricing

Code	Description & Notes	Tier I	Tier II	Tier III
TS-PU	Tubular Sectional - Push Pin Privacy Function	$475	$594	$773

Tubular sectional privacy or patio sets features a standard passage latch for knob or lever, coupled with a mortise bolt privacy set. The spacing between the latch and mortise bolt can vary to match existing door preparations.

A tubular push pin privacy set features a single tubular latch with a locking mechanism.

- Pricing for each set is determined by the tier level for the knob or lever. See ***Door Knobs*** or ***Door Levers*** section to select.
- Available backsets for tubular latches, mortise bolts and deadbolts: 2-3/8" or 2-3/4".
- Large rosettes required for pre-bored doors. See the ***Rosettes & Cylinder Collars*** section to select.
- Mounting plates with spring assists come standard for all sets using tubular latches. Not available on doors under 1-3/8" thick. See the ***Mounting Hardware*** section for more information.
- "T" strike or full lip strike plates are available for tubular latch sets. See the ***Additional Hardware*** section to select.
- Extended lip strikes are available upon request. See the ***Forms & Supplements*** section for ordering form.
- For split finish orders, the face and strike plates are finished subject to door handing. **Add 10%** for split finish on all functions.

Tubular Sectional Privacy Sets

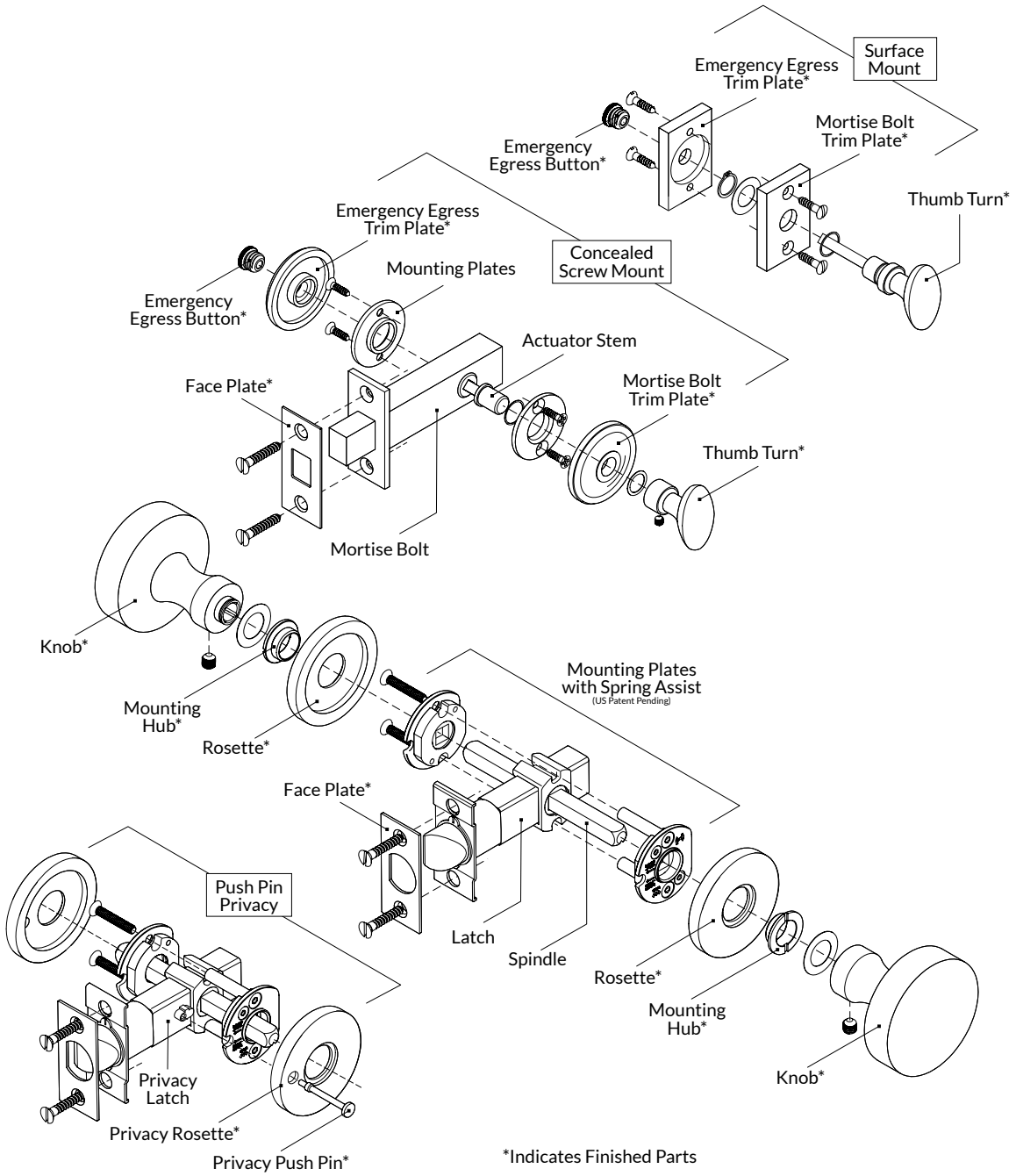

Hardware Schedule Example

		STYLE							
		EXTERIOR				INTERIOR			
FUNCTION DESCRIPTION	TYPE - FUNCTION	LEVER - KNOB HANDLE	ESCUTCHEON ROSETTE	CYLINDER E.E.	TRIM	LEVER - KNOB HANDLE	ESCUTCHEON ROSETTE	THUMB TURN CYLINDER	TRIM
PRIVACY	TS-PR	25032	20057	22006	20052	25032	20057	22004	20052
PATIO	TS-PT	25032	20057	NA	NA	25032	20057	22004	20052
PUSH PIN PRIVACY	TS-PU	25032	20057	NA	NA	25032	20057	NA	NA

Tubular Sectional Passage & Dummy Sets

TS-PS Tubular Sectional - Passage Set

Exterior Interior

You Select

- Knob or lever - exterior & interior
- Rosette - exterior & interior

Tier level determined by the knob or lever for each set.

Included With Set

- Passage latch with face plate - specify backset
- Rosette mounting with spring assist assembly
- Rosette mounting hub - exterior & interior
- Spindle

Pricing

Code	Description & Notes	Tier I	Tier II	Tier III
TS-PS	Tubular Sectional - Passage Function	$475	$594	$773

TS-FD Tubular Sectional - Full Dummy Set

Exterior Interior

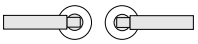

You Select

- Fixed knob or lever - exterior & interior
- Rosette - exterior & interior

Tier level determined by the knob or lever for each set.

Included With Set

- Half dummy mounting plates - exterior & interior
  Or
- Full dummy pre-bore adapter assembly
- Rosette mounting hubs - exterior & interior
- Dummy face plate - pre-bored doors only

Pricing

Code	Description & Notes	Tier I	Tier II	Tier III
TS-FD	Tubular Sectional - Full Dummy Function	$402	$520	$700
TS-FD-PB	Sectional Full Dummy Function - Pre-bored Door	$410	$529	$708

TS-HD Tubular Sectional - Half Dummy Set

Exterior Interior

You Select

- Fixed knob or lever - specify handing for lever
- Rosette

Tier level determined by the knob or lever for each set.

Included With Set

- Half dummy mounting plate
- Rosette mounting hub

Pricing

Code	Description & Notes	Tier I	Tier II	Tier III
TS-HD	Tubular Sectional - Half Dummy Function	$200	$261	$350

A tubular sectional passage set features a standard passage latch for knob or lever.

- Pricing for each set is determined by the tier level for the knob or lever. See Door Knobs or Door Levers section to select.
- Available backsets for tubular latches: 2-3/8" or 2-3/4".
- Large rosettes and collars required for pre-bored doors. See the ***Rosettes & Cylinder Collars*** section to select.
- Mounting plates with spring assists come standard for all sets using tubular latches. Not available on doors under 1-3/8" thick. See the ***Mounting Hardware*** section for more information.
- "T" strike or full lip strike plates are available for tubular latch sets. See the ***Additional Hardware*** section to select.
- Extended lip strikes are available upon request. See the ***Forms & Supplements*** section for ordering form.
- For split finish orders, the face and strike plates are finished subject to door handing. Add 10% for split finish on all functions.

Sectional Dummy Sets

- Sectional dummy sets are the same for tubular or mortise lock applications.
- Full dummy sets consist of two half dummy sets mounted on either side of the door. Lever sets have one left hand and one right hand lever.
- Full dummy sets may be installed on pre-bored doors with a dummy face plate and large rosettes. A half dummy cannot be installed on pre-drilled doors.
- For lever half dummy set, specify required handing. Knob dummy sets do not require handing.

Tubular Sectional Passage & Dummy Sets

TS-PS Tubular Sectional - Passage Set

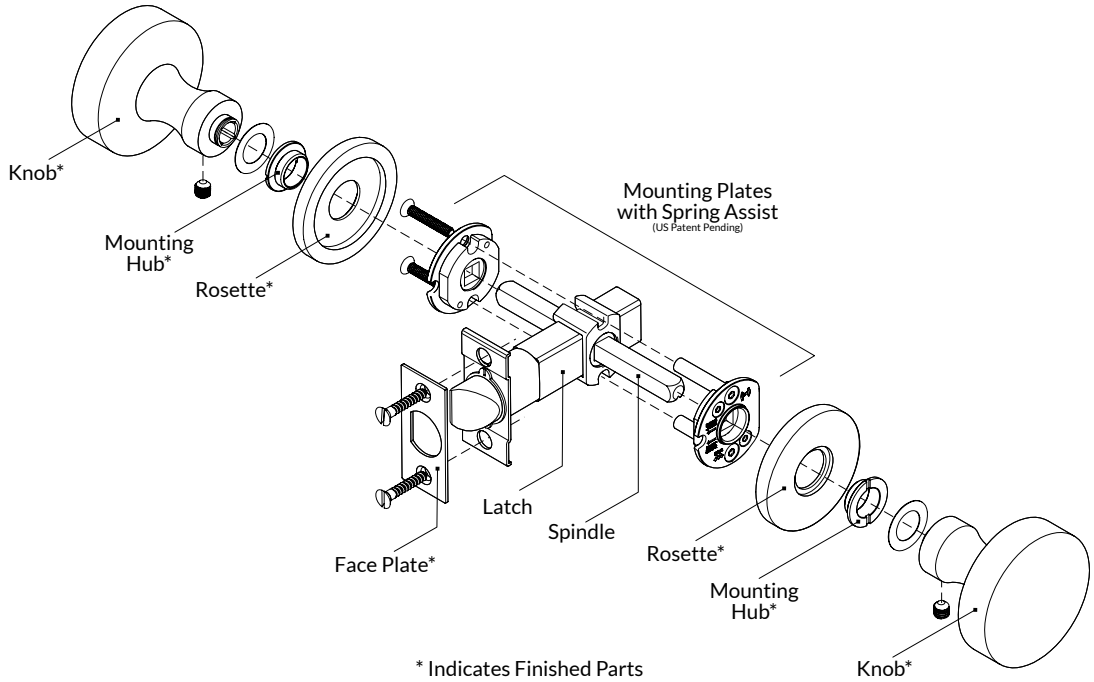

TS-HD Tubular Sectional Half Dummy Set

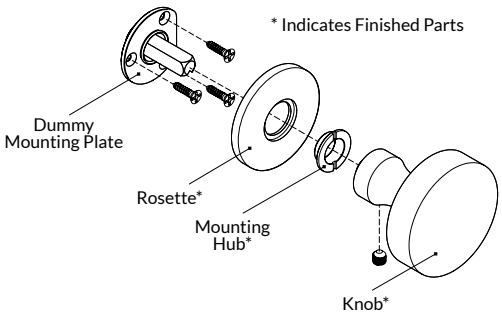

TS-FD Pre-Bore Full Dummy Mounting Components

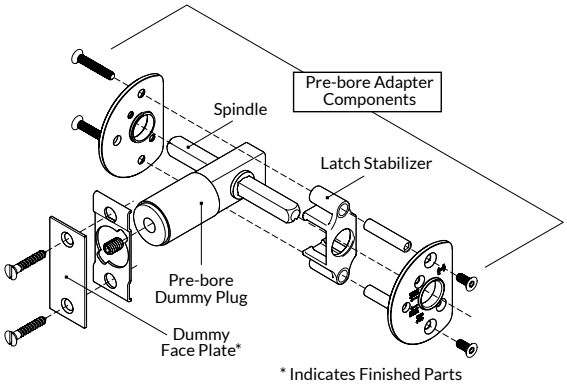

Hardware Schedule Example

		STYLE							
		EXTERIOR				INTERIOR			
FUNCTION DESCRIPTION	TYPE - FUNCTION	LEVER - KNOB HANDLE	ESCUTCHEON ROSETTE	CYLINDER E.E.	TRIM	LEVER - KNOB HANDLE	ESCUTCHEON ROSETTE	THUMB TURN CYLINDER	TRIM
PASSAGE	TS-PS	25032	20057	NA	NA	25032	20057	NA	NA
FULL DUMMY	TS-FD	25032	20057	NA	NA	25032	20057	NA	NA
HALF DUMMY	TS-HD	25032	20057	NA	NA	NA	NA	NA	NA

Mortise Deadlock Sets

MDL-EN Mortise Deadlock - Entry Set

Exterior Interior

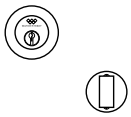

You Select

- Cylinder collar - exterior
- Thumb turn trim plate - interior
- Thumb turn
- Optional exposed screw trim - interior

Included With Set

- Mortise deadlock - specify backset
- Mortise deadlock faceplate
- Mortise cylinder with face plate
- Cylinder blocking ring, if required - exterior
- Strike plate & dust box

Pricing

Code	Description & Notes	Price
MDL-EN	Entry Function	$620

MDL-ST Mortise Deadlock - Storeroom Set

Exterior Interior

You Select

- Cylinder collar - exterior

Included With Set

- Mortise deadlock - specify backset
- Mortise deadlock faceplate
- Mortise cylinder with face plate
- Cylinder blocking ring, if required - exterior
- Strike plate & dust box

Pricing

Code	Description & Notes	Price
MDL-ST	Storeroom Function	$525

MDL-CC Mortise Deadlock - Cylinder x Cylinder Set

Exterior Interior

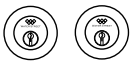

You Select

- Cylinder collar - exterior & interior

Included With Set

- Mortise deadlock - specify backset
- Mortise deadlock faceplate
- Mortise cylinders with face plates - exterior & interior
- Strike plate & dust box

Pricing

Code	Description & Notes	Price
MDL-CC	Cylinder x Cylinder Function	$620

MDL-PR Mortise Deadlock - Privacy Set

Exterior Interior

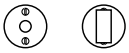

You Select

- Emergency egress trim plate - exterior
- Emergency egress button
- Thumb turn trim plate - interior
- Thumb turn
- Optional exposed screw trim - ext. & int.

Included With Set

- Mortise deadlock - specify backset
- Mortise deadlock faceplate
- Strike plate & dust box

Pricing

Code	Description & Notes	Price
MDL-PR	Privacy Function	$620

MDL-PT Mortise Deadlock - Patio Set

Exterior Interior

You Select

- Mortise bolt trim plate - interior
- Thumb turn
- Optional exposed screw trim - interior

Included With Set

- Mortise deadlock - specify backset
- Mortise deadlock faceplate
- Strike plate & dust box

Pricing

Code	Description & Notes	Price
MDL-PT	Patio Function	$525

Mortise Deadlock Sets

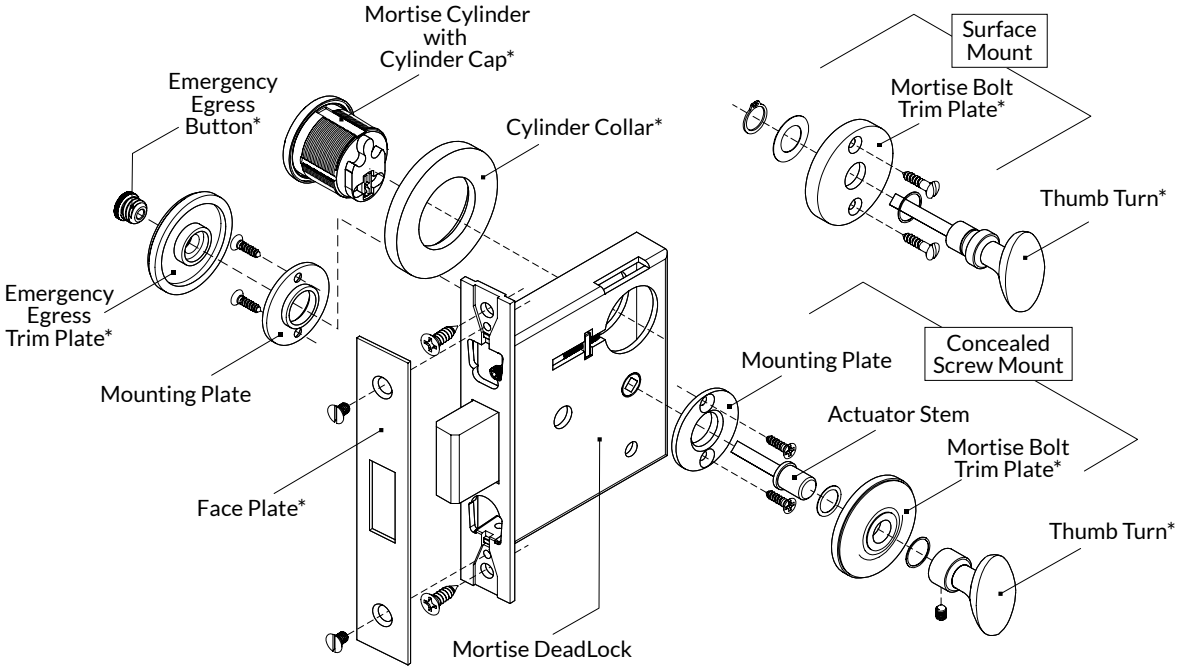

*Indicates Finished Parts

A mortise deadlock is typically used as a stand alone lock or a supplement to a sectional passage sets. The lock functions independently of any latch mechanism, or can be used alone to secure doors or gates.

- 9500 series deadlock is standard. Available backsets 2-1/2", 2-3/4", 3-3/4", 5", or 6". Custom backsets are also available. See ***Locks & Latches*** section for more information.
- 7200 series deadlocks are available with no upcharge. Available backsets 2-1/2" or 2-3/4" only.
- For split finish orders, the face and strike plates are finished subject to door handing. **Add 10%** for split finish on all functions.

Hardware Schedule Example

		STYLE							
		EXTERIOR				INTERIOR			
FUNCTION DESCRIPTION	TYPE - FUNCTION	LEVER - KNOB HANDLE	ESCUTCHEON ROSETTE	CYLINDER E.E.	TRIM	LEVER - KNOB HANDLE	ESCUTCHEON ROSETTE	THUMB TURN CYLINDER	TRIM
MORTISE DEADLOCK ENTRY	MDL-EN	NA	NA	CYL	20057	NA	NA	22004	20076
MORTISE DEADLOCK STOREROOM	MDL-ST	NA	NA	CYL	20057	NA	NA	NA	NA
MORTISE DEADLOCK CYL. X CYL. ENTRY	MDL-CC	NA	NA	CYL	20057	NA	NA	CYL	20057
MORTISE DEADLOCK PRIVACY	MDL-PR	NA	NA	22006	20076	NA	NA	22004	20076
MORTISE DEADLOCK PATIO	MDL-PT	NA	NA	NA	NA	NA	NA	22004	20076

Tubular Deadbolt & Mortise Bolt Sets

TDB-EN Tubular Deadbolt - Entry Set

Exterior	Interior	You Select	Included With Set
		• Deadbolt collar - exterior • Deadbolt collar - interior • Thumb turn • Optional exposed screw trim - interior	• Deadbolt with face plate - specify backset • Deadbolt cylinder • Cylinder blocking ring - exterior • Deadbolt standard trim - interior • Strike plate & dust box

Pricing

Code	Description & Notes	Price
TDB-EN	Entry Function	$310
	LV001 - Level Invisible Smart Lock Kit - **Add $*** **	

TDB-CC Tubular Deadbolt - Cylinder x Cylinder Entry Set

Exterior	Interior	You Select	Included With Set
		• Deadbolt collar - exterior • Deadbolt collar - interior • Optional exposed screw trim - interior	• Deadbolt with face plate - specify backset • Deadbolt cylinders - exterior & interior • Cylinder blocking ring - exterior • Cylinder blocking ring - interior • Strike plate & dust box

Pricing

Code	Description & Notes	Price
TDB-CC	Cylinder x Cylinder Entry Function	$310
	LV001 - Level Invisible Smart Lock Kit - **Add $*** **	

TMB-PR Tubular Mortise Bolt - Privacy Set

Exterior	Interior	You Select	Included With Set
		• Emergency egress trim plate - exterior • Emergency egress button • Mortise bolt trim plate - interior • Thumb turn	• Mortise bolt with face plate - specify backset • Strike plate & dust box

Pricing

Code	Description & Notes	Price
TMB-PR	Privacy Function	$215

TMB-PT Tubular Mortise Bolt - Patio Set

Exterior	Interior	You Select	Included With Set
		• Mortise bolt trim plate - interior • Thumb turn	• Mortise bolt with face plate - specify backset • Strike plate & dust box

Pricing

Code	Description & Notes	Price
TMB-PT	Patio Function	$167

Tubular deadbolt and mortise bolt sets are installed on doors for additional security. They function independently from any latches or other locks found in the door.

- Available backsets for tubular deadbolts and mortise bolts: 2-3/8" or 2-3/4".
- Large rosettes and collars required for pre-bored doors. See the ***Rosettes & Cylinder Collars*** section to select.
- For easier installation, an exposed screw option on deadbolt interior trim is available upon request. Indicate "exposed screw" in the notes section for each line when ordering.
- Tubular deadbolts are provided with re-enforced sub strike plate for added security.
- For split finish orders, the face and strike plates are finished subject to door handing. Add 10% for split finish on all functions.

Tubular Deadbolt & Mortise Bolt Sets

Tubular Deadbolt Set

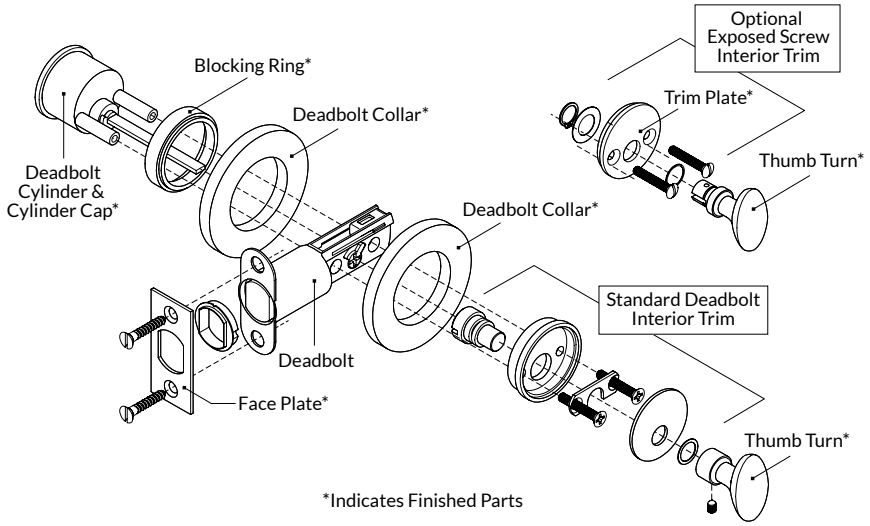

Tubular Mortise Bolt Privacy Set

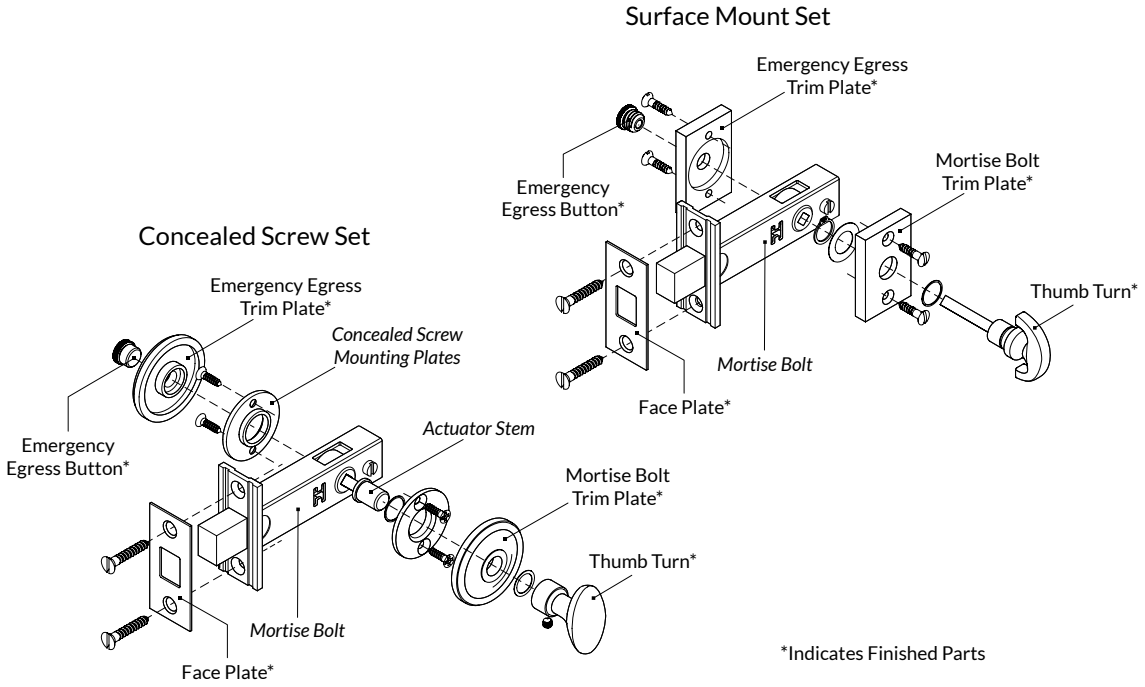

Hardware Schedule Example

		STYLE							
		EXTERIOR				INTERIOR			
FUNCTION DESCRIPTION	TYPE - FUNCTION	LEVER - KNOB HANDLE	ESCUTCHEON ROSETTE	CYLINDER E.E.	TRIM	LEVER - KNOB HANDLE	ESCUTCHEON ROSETTE	THUMB TURN CYLINDER	TRIM
TUBULAR DEADBOLT ENTRY	TDB-EN	NA	NA	CYL	20057	NA	NA	22004	20057
TUBULAR DEADBOLT ENTRY - CYL X CYL	TDB-CC	NA	NA	CYL	20057	NA	NA	CYL	20057
TUBULAR MORTISE BOLT PRIVACY	TMB-PR	NA	NA	22006	20052	NA	NA	22004	20052
TUBULAR MORTISE BOLT PATIO	TMB-PT	NA	NA	NA	NA	NA	NA	22004	20052

European Multipoint Sets

EPMP-EN European Multipoint - Entry Set

Exterior Interior

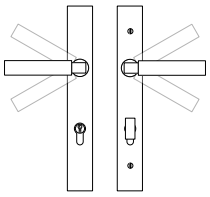

You Select

- **Lever - exterior & interior**
- Narrow escutcheon - exterior & interior
- Thumb turn - interior

Tier level determined by the lever for each set.

Included With Set

- European lock cylinder - key x thumb turn
- Through bolts - specify lock configuration
- Bi-directional spring assist assembly

Multipoint lock is provided by the door manufacturer. Specify lock position in door - offset cylinder may be required.
Optional: cylinder with key x key access.

Pricing

Code	Description & Notes	Tier I	Tier II	Tier III
EPMP-EN	Entry Function	$983	$1,103	$1,282

EPMP-PT European Multipoint - Patio Set

Exterior Interior

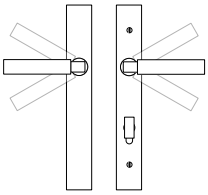

You Select

- **Lever - exterior & interior**
- Narrow escutcheon - exterior & interior
- Thumb turn - interior

Tier level determined by the lever for each set.

Included With Set

- European half cylinder - thumb turn
- Through bolts - specify lock configuration
- Bi-directional spring assist assembly

Multipoint lock is provided by the door manufacturer.
Optional: half cylinder with key access.

Pricing

Code	Description & Notes	Tier I	Tier II	Tier III
EPMP-PT	Patio Function	$931	$1,051	$1,230

EPMP-PS European Multipoint - Passage Set

Exterior Interior

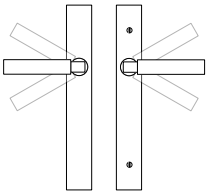

You Select

- **Lever - exterior & interior**
- Narrow escutcheon - exterior & interior

Tier level determined by the lever for each set.

Included With Set

- Through bolts - specify lock configuration
- Bi-directional spring assist assembly

Multipoint lock is provided by the door manufacturer.

Pricing

Code	Description & Notes	Tier I	Tier II	Tier III
EPMP-PS	Passage Function	$711	$828	$1,008

A European multipoint set is characterized by the use of lock cylinder that engages the lock with a rotating cam. The lock cylinder has a distinctive shape that is utilized for both keyed and thumb turn applications.

The escutcheon sets are lever high, and typically there is a 92mm (approx. 3-5/8") center to center spacing between the spindle and the lock cylinder. Some locks feature different spacing so it is important to confirm the spacing of your lock and specify the configuration on your multipoint check sheet. Refer to the ***Forms & Supplements*** section of the catalog for the check sheets.

If your lock does not conform to our pre-established configurations, we can manufacture plates to meet your specifications with no upcharge, but we must have complete information and signed print approvals before work will begin. Keep in mind that the measurements for European locks are in millimeters. Multipoint sets are manufactured to order and are not eligible for return.

European Multipoint Sets

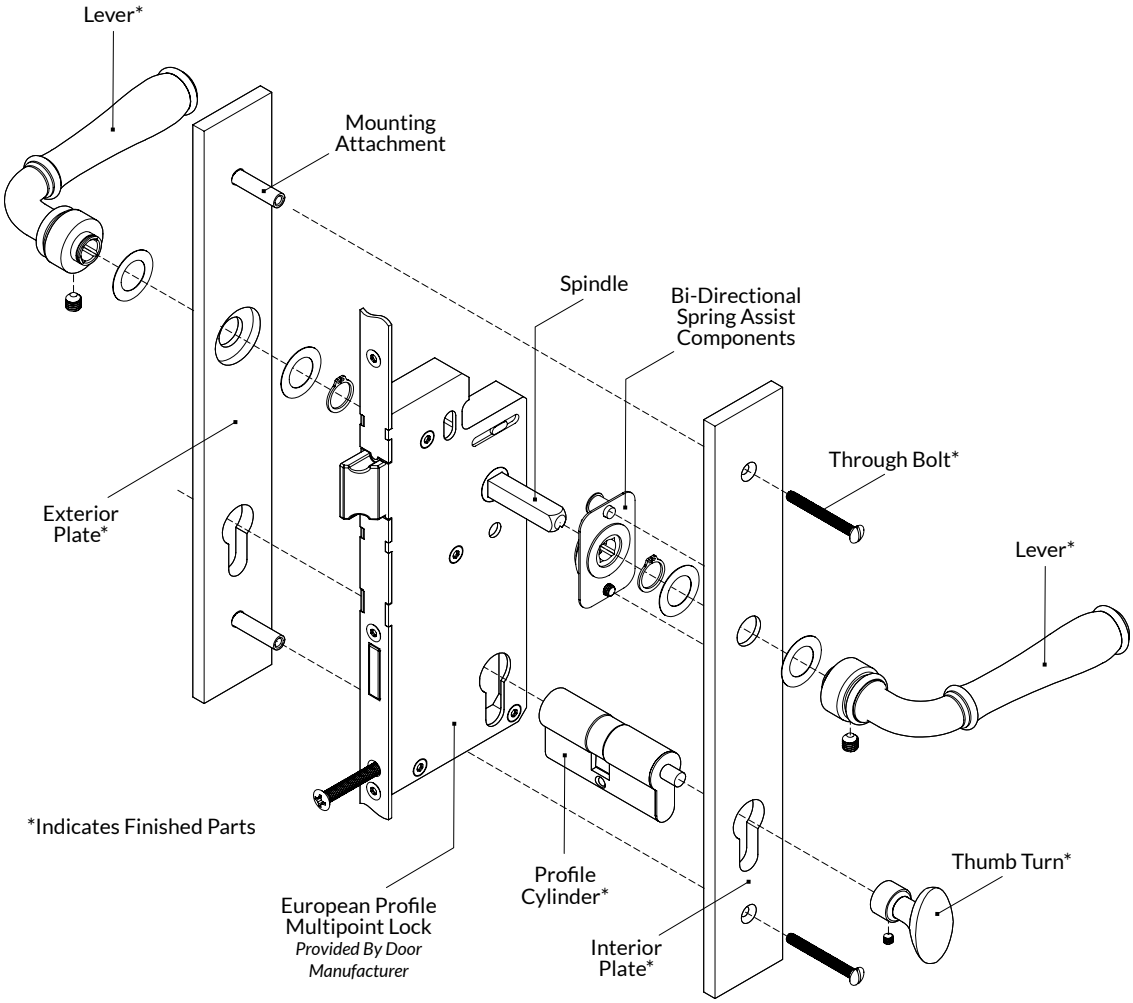

- **Add $138** for each plate with KN (knurl) edge details.
- **Add $550** for split finishes on entry function. **Add 10%** for split finish on all other functions.
- Through bolting is standard with multipoint sets.
- Narrow plates included in price. Custom sized plates priced on application.
- Due to the bi-directional operation of the locking mechanism, levers are required.
- Lock body and strike plates provided by door manufacturer. Full or half cylinders are provided according to function.
- Bi-directional spring assists are standard on multipoint sets. Special door preparation may be necessary.
- Multipoint check sheets are required for each order. Refer to *Forms & Supplements* section of the catalog for the check sheets.
- Multipoint sets are manufactured to order and are not eligible for return.

Hardware Schedule Example

		STYLE							
		EXTERIOR				INTERIOR			
FUNCTION DESCRIPTION	TYPE - FUNCTION	LEVER - KNOB HANDLE	ESCUTCHEON ROSETTE	CYLINDER E.E.	TRIM	LEVER - KNOB HANDLE	ESCUTCHEON ROSETTE	THUMB TURN CYLINDER	TRIM
ENTRY	EPMP-EN	23015	21502	CYL	NA	23015	21501	22004	NA
PATIO	EPMP-PT	23015	21502	NA	NA	23015	21501	22004	NA
PASSAGE	EPMP-PS	23015	21502	NA	NA	23015	21501	NA	NA

American Multipoint Sets

EAMP-EN American Multipoint - Entry Set

Exterior Interior

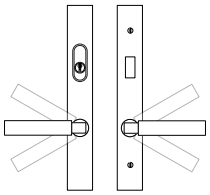

You Select

- **Lever - exterior & interior**
- Narrow escutcheon - exterior & interior
- Thumb turn - interior

Tier level determined by the lever for each set.

Included With Set

- Lock cylinder with tailpiece
- Cylinder bump
- Through bolts - specify lock configuration
- Bi-directional spring assist assembly

Multipoint lock is provided by the door manufacturer.

Pricing

Code	Description & Notes	Tier I	Tier II	Tier III
EAMP-EN	Entry Function	$895	$1,014	$1,194

EAMP-PT American Multipoint - Patio Set

Exterior Interior

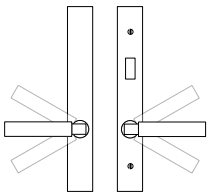

You Select

- **Lever - exterior & interior**
- Narrow escutcheon - exterior & interior
- Thumb turn - interior

Tier level determined by the lever for each set.

Included With Set

- Through bolts - specify lock configuration
- Bi-directional spring assist assembly

Multipoint lock is provided by the door manufacturer.

Pricing

Code	Description & Notes	Tier I	Tier II	Tier III
EAMP-PT	Patio Function	$824	$943	$1,122

EAMP-PS American Multipoint - Passage Set

Exterior Interior

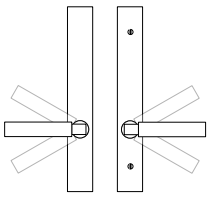

You Select

- **Lever - exterior & interior**
- Narrow escutcheon - exterior & interior

Tier level determined by the lever for each set.

Included With Set

- Through bolts - specify lock configuration
- Bi-directional spring assist assembly

Multipoint lock is provided by the door manufacturer.

Pricing

Code	Description & Notes	Tier I	Tier II	Tier III
EAMP-PS	Passage Function	$711	$828	$1,008

American multipoint sets are characterized by the use of lock cylinders that engage the lock with a tailpiece. Specify whether the tailpiece hub is in a vertical or horizontal position when the door is in the open (latch bolt retracted) position.

The escutcheon sets are typically lever low, but can be lever high. It is important to check the spacing of your lock and specify the configuration on your multipoint check sheet. Refer to the ***Forms & Supplements*** section of the catalog for the check sheets.

If your lock does not conform to our pre-established configurations, we can manufacture plates to meet your specifications with no upcharge, but we must have complete information and signed print approvals before work will begin. Keep in mind that the measurements may be in millimeters. Multipoint sets are manufactured to order and are not eligible for return.

American Multipoint Sets

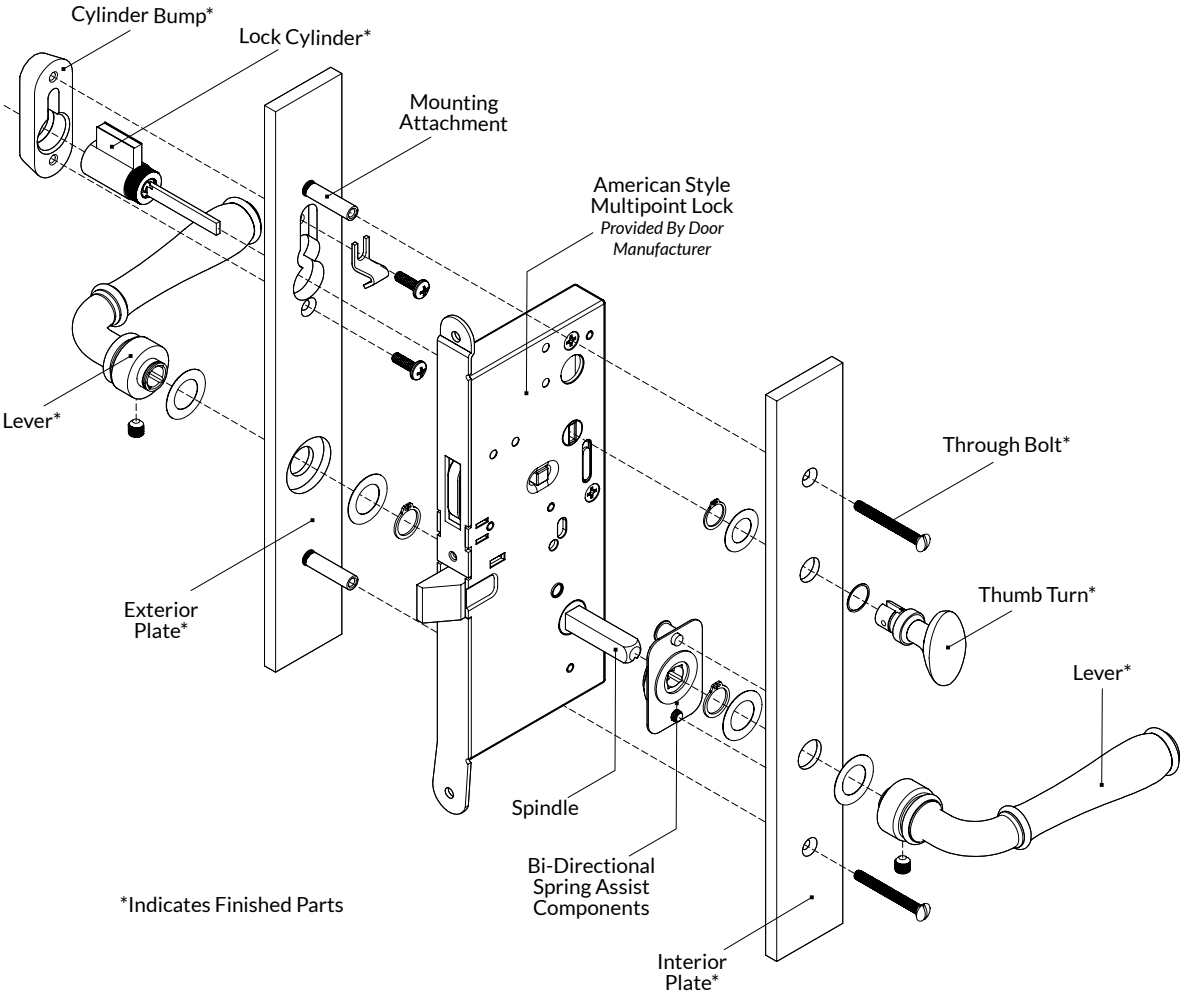

- **Add $138** for each plate with KN (knurl) edge details.
- **Add 10%** for split finish on all functions.
- Through bolting is standard with multipoint sets.
- Narrow plates included in price. Custom sized plates priced on application.
- Due to the bi-directional operation of the locking mechanism, levers are required.
- Lock body and strike plates provided by door manufacturer.
- Bi-directional spring assists are standard on multipoint sets. Special door preparation may be necessary.
- Multipoint check sheets are required for each order. Refer to ***Forms & Supplements*** section of the catalog for the check sheets.
- Multipoint sets are manufactured to order and are not eligible for return.

Hardware Schedule Example

		STYLE							
		EXTERIOR				INTERIOR			
FUNCTION DESCRIPTION	TYPE - FUNCTION	LEVER - KNOB HANDLE	ESCUTCHEON ROSETTE	CYLINDER E.E.	TRIM	LEVER - KNOB HANDLE	ESCUTCHEON ROSETTE	THUMB TURN CYLINDER	TRIM
ENTRY	EAMP-EN	23015	21502	CYL	NA	23015	21501	22004	NA
PATIO	EAMP-PT	23015	21502	NA	NA	23015	21501	22004	NA
PASSAGE	EAMP-PS	23015	21502	NA	NA	23015	21501	NA	NA

Multipoint Active & Full Dummy Sets

EPMP-AD Multipoint - Active Dummy Set

Exterior Interior

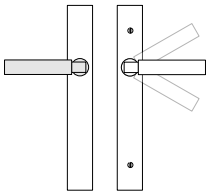

You Select

- **Fixed lever - exterior**
- **Active lever - interior**
- Narrow escutcheon - exterior & interior

Tier level determined by the lever for each set.

Included With Set

- Through bolts - specify lock configuration
- Bi-directional spring assist assembly - interior
- Escutcheon dummy mounting - exterior

Multipoint lock is provided by the door manufacturer.

Pricing

Code	Description & Notes	Tier I	Tier II	Tier III
EPMP-AD	Active Dummy Function - European Profile	$711	$828	$1,008
EAMP-AD	Active Dummy Function - American Profile	$711	$828	$1,008

EPMP-FD Multipoint - Full Dummy Set

Exterior Interior

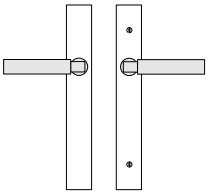

You Select

- **Fixed levers - exterior & interior**
- Narrow escutcheon - exterior & interior

Tier level determined by the lever for each set.

Included With Set

- Through bolts - matches active sets
- Escutcheon dummy mounting - exterior & interior

Pricing

Code	Description & Notes	Tier I	Tier II	Tier III
EPMP-FD	Full Dummy Function - European Profile	$711	$828	$1,008
EAMP-FD	Full Dummy Function - American Profile	$711	$828	$1,008

EPMP-HD Multipoint - Half Dummy Set

Exterior Interior

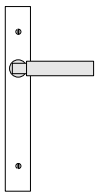

You Select

- **Fixed lever - interior**
- Narrow escutcheon - exterior & interior

Tier level determined by the lever for each set.

Included With Set

- Surface mount screws - matches active sets
- Escutcheon dummy mounting - interior

Pricing

Code	Description & Notes	Tier I	Tier II	Tier III
EPMP-HD	Half Dummy Function - European Profile	$354	$414	$504
EAMP-HD	Half Dummy Function - American Profile	$354	$414	$504

NOTE:
Active dummy and full dummy sets function the same for both European (EPMP) style and American (EAMP) style locks. The configuration may differ, with the lever being low or high. It is important that you fill out a multipoint check sheet for every application so we can match your existing lock configuration and through bolt spacing.

Multipoint Active & Full Dummy Sets

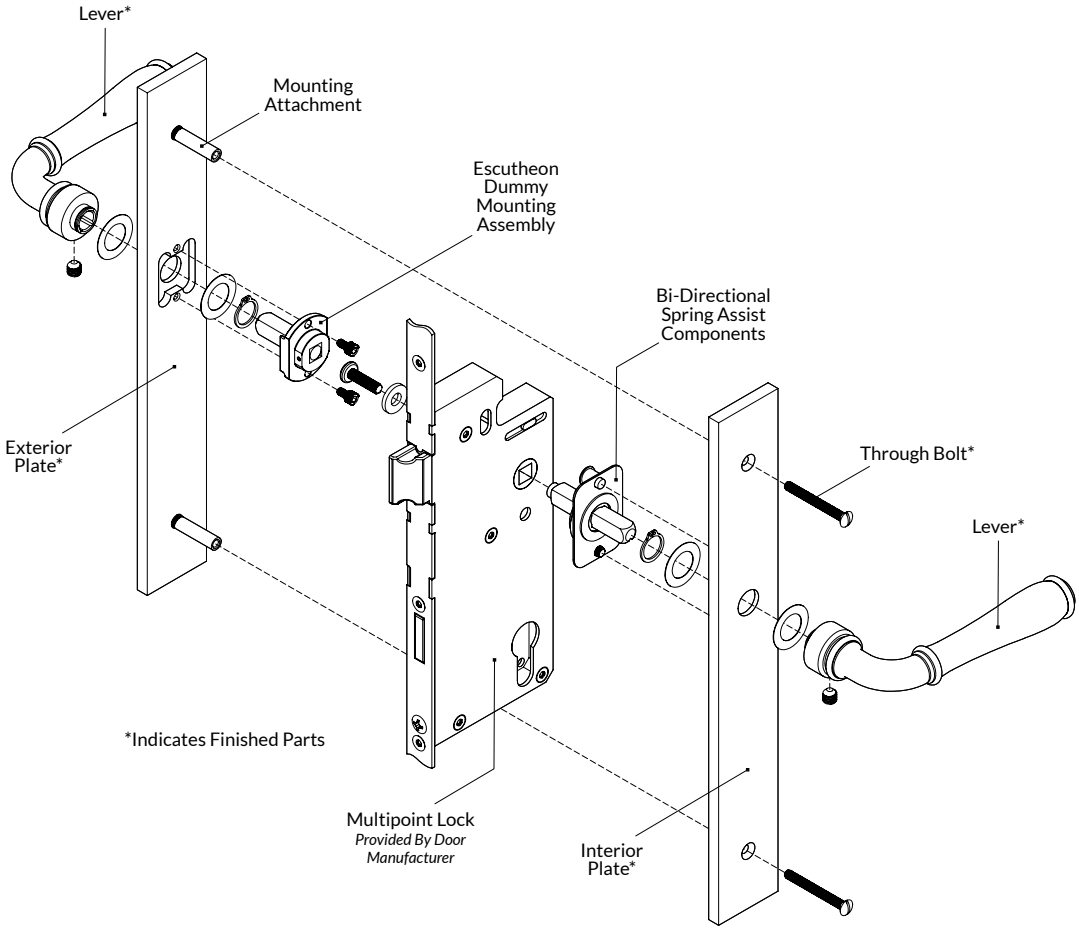

- **Add $138** for each plate with KN (knurl) edge details.
- **Add 10%** for split finishes.
- Through bolting is standard with multipoint sets. Half dummy sets use surface mount wood screws - specify if machine screws are required for metal clad door surfaces.
- Narrow included in price. Custom sized plates priced on application.
- Due to the bi-directional operation of the locking mechanism on the active dummy set, levers are required.
- Lock body and strike plates provided by door manufacturer. No lock body is used on dummy applications.
- Bi-directional spring assists are standard on multipoint sets. Special door preparation may be necessary.
- Multipoint check sheets are required for each order. Refer to **Forms & Supplements** section of the catalog for the check sheets.
- Multipoint sets are manufactured to order and are not eligible for return.

Hardware Schedule Example

		STYLE							
		EXTERIOR				INTERIOR			
FUNCTION DESCRIPTION	TYPE - FUNCTION	LEVER - KNOB HANDLE	ESCUTCHEON ROSETTE	CYLINDER E.E.	TRIM	LEVER - KNOB HANDLE	ESCUTCHEON ROSETTE	THUMB TURN CYLINDER	TRIM
ACTIVE DUMMY	EPMP-AD EAMP-AD	23015	21502	NA	NA	23015	21501	NA	NA
FULL DUMMY	EPMP-FD EAMP-FD	23015	21502	NA	NA	23015	21501	NA	NA
HALF DUMMY	EPMP-HD EAMP-HD	NA	NA	NA	NA	23015	21501	NA	NA

Sectional European Multipoint Sets

SPMP-EN Sectional European Multipoint - Entry Set

Exterior Interior

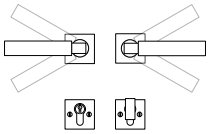

You Select

- **Lever - exterior & interior**
- Rosette- exterior & interior
- Profile cylinder collar - exterior & interior
- Thumb turn - interior

Tier level determined by the lever for each set.

Included With Set

- European profile lock cylinder - key x thumb turn
- Rosette mounting plate - exterior & interior
- Rosette mounting hubs - exterior & interior
- Spindle

Multipoint lock is provided by the door manufacturer. Specify lock position in door - offset cylinder may be required.
Optional: cylinder with key x key access.

Pricing

Code	Description & Notes	Tier I	Tier II	Tier III
SPMP-EN	Entry Function	$1,009	$1,128	$1,307

SPMP-PT Sectional European Multipoint - Patio Set

Exterior Interior

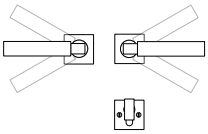

You Select

- **Lever - exterior & interior**
- Rosette- exterior & interior
- Profile cylinder collar - interior
- Thumb turn - interior

Tier level determined by the lever for each set.

Included With Set

- European profile half cylinder - thumb turn
- Rosette mounting plate - exterior & interior
- Rosette mounting hubs - exterior & interior
- Spindle

Multipoint lock is provided by the door manufacturer.
Optional: half cylinder with key access.

Pricing

Code	Description & Notes	Tier I	Tier II	Tier III
SPMP-PT	Patio Function	$840	$959	$1,139

SPMP-PS Sectional European Multipoint - Passage Set

Rev. 2023

Exterior Interior

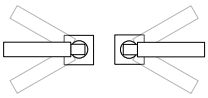

You Select

- **Lever - exterior & interior**
- Rosette- exterior & interior

Tier level determined by the lever for each set.

Included With Set

- Rosette mounting plate - exterior & interior
- Rosette mounting hubs - exterior & interior
- Spindle

Multipoint lock is provided by the door manufacturer.

Pricing

Code	Description & Notes	Tier I	Tier II	Tier III
SPMP-PS	Passage Function	$402	$520	$700

A European multipoint set is characterized by the use of lock cylinder that engages the lock with a rotating cam. The lock cylinder has a distinctive shape that is utilized for both keyed and thumb turn applications.

Because of the various manufacturer lock specification, through bolt access is limited or not available for sectional trim. Our sectional multipoint hardware is only designed to be used with European profile locks. The trim is surface mounted to the door, so it is important to specify if the door is wood or metal clad. Doors are commonly wood interior with cladding on the exterior. We will provide the proper surface mount screws for the material in question.

Multipoint check sheets are required for each order. Refer to the ***Forms & Supplements*** section of the catalog. Offset cylinders may be required. If the lock is not centered in the door, indicate the position of the lock within the door.

Sectional European Multipoint Sets

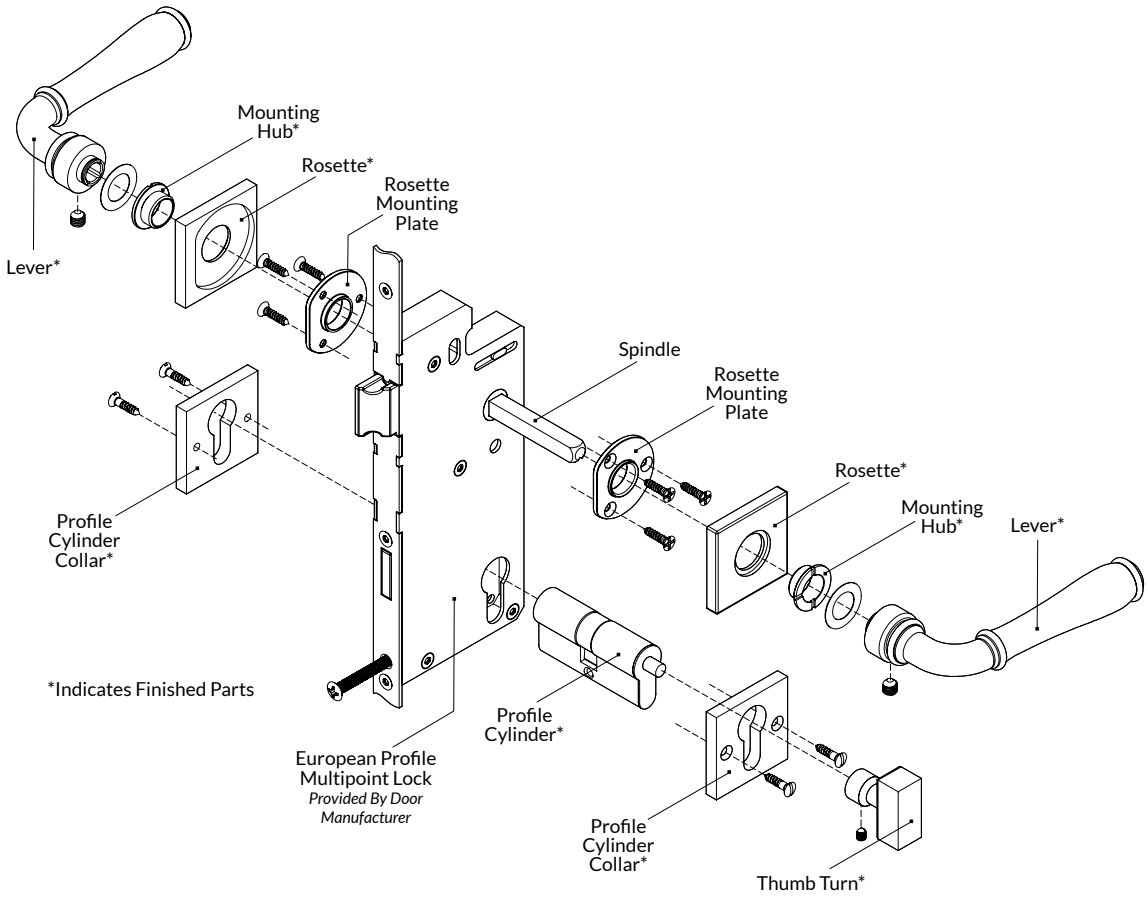

- Due to the bi-directional operation of the locking mechanism, levers are required.
- Because through bolting is not possible, spring assists are not available for sectional multipoint trim sets.
- Lock body and strike plates provided by door manufacturer. Full or half cylinders are provided according to function.
- Multipoint check sheets are required for each order. Refer to ***Forms & Supplements*** section of the catalog for the check sheets.
- Multipoint sets are manufactured to order and are not eligible for return.
- **Add $550** for split finishes on entry function. **Add 10%** for split finish on all other functions.

Hardware Schedule Example

		STYLE							
		EXTERIOR				INTERIOR			
FUNCTION DESCRIPTION	TYPE - FUNCTION	LEVER - KNOB HANDLE	ESCUTCHEON ROSETTE	CYLINDER E.E.	TRIM	LEVER - KNOB HANDLE	ESCUTCHEON ROSETTE	THUMB TURN CYLINDER	TRIM
ENTRY	SPMP-EN	23015	20050	CYL	20050	23015	20050	22009	20050
PATIO	SPMP-PT	23015	20050	NA	NA	23015	20050	22009	20050
PASSAGE	SPMP-PS	23015	20050	NA	NA	23015	20050	NA	NA

Sectional Multipoint Active & Full Dummy Sets

SPMP-AD Sectional European Multipoint - Active Dummy Set

Exterior Interior

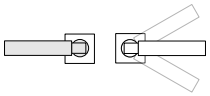

You Select

- **Fixed lever - exterior**
- **Active lever - interior**
- Rosette- exterior & interior

Tier level determined by the lever for each set.

Included With Set

- Half dummy mounting plate - exterior
- Rosette mounting plate - interior
- Rosette mounting hubs - exterior & interior
- Half Spindle - interior

Multipoint lock is provided by the door manufacturer.

Pricing

Code	Description & Notes	Tier I	Tier II	Tier III
SPMP-AD	Active Dummy Function	$402	$520	$700

SPMP-FD Sectional European Multipoint - Full Dummy Set

Exterior Interior

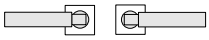

You Select

- **Fixed levers - exterior & interior**
- Rosette- exterior & interior

Tier level determined by the lever for each set.

Included With Set

- Half dummy mounting plate - exterior & interior
- Rosette mounting hubs - exterior & interior

Pricing

Code	Description & Notes	Tier I	Tier II	Tier III
SPMP-FD	Full Dummy Function	$402	$520	$700

SPMP-HD Sectional European Multipoint - Half Dummy Set

Exterior Interior

You Select

- **Fixed lever - interior**
- Rosette- interior

Tier level determined by the lever for each set.

Included With Set

- Half dummy mounting plate - interior
- Rosette mounting hubs - exterior & interior

Pricing

Code	Description & Notes	Tier I	Tier II	Tier III
SPMP-HD	Half Dummy Function	$200	$261	$350

Active dummy and full dummy sets are configured to match existing entry, patio or passage sets. The active dummy will use a multipoint lock, but only the interior lever functions, while the exterior lever is fixed.

Dummy sets are mounted to the surface of the door the levers remain fixed. Full dummy sets include both a left hand and right hand lever. For a half dummy set, it is important that you specify the handing of the door.

Because of the various manufacturer lock specification, through bolt access is limited or not available for sectional trim. Our sectional multipoint hardware is only designed to be used with European locks. The trim is surface mounted to the door, so it is important to specify if the door is wood or metal clad. Doors are commonly wood interior with cladding on the exterior. We will provide the proper surface mount screws for the material in question.

Multipoint check sheets are required for each order. Refer to the ***Forms & Supplements*** section of the catalog.

Sectional Multipoint Active & Full Dummy Sets

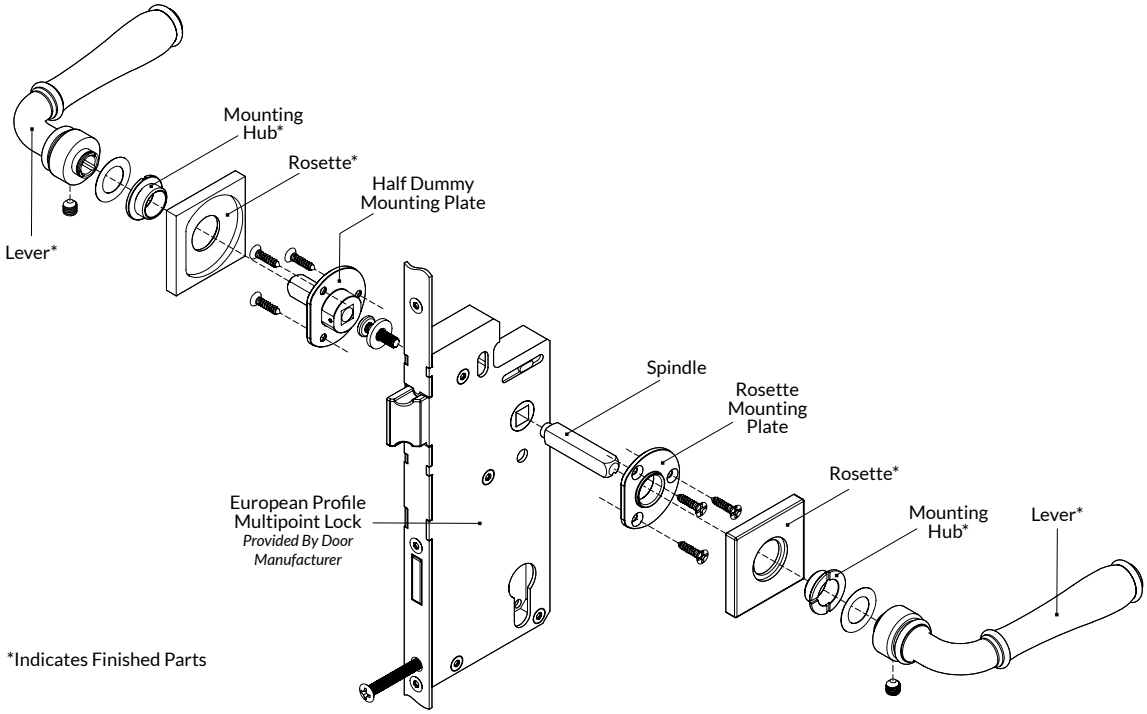

- Multipoint sets use levers only.
- Because through bolting is not possible, spring assists are not available for sectional multipoint trim sets.
- Lock body and strike plates provided by door manufacturer.
- Dummy doors have no lock. Mount dummy hardware to match existing positions on active doors.
- Multipoint check sheets are required for each order. Refer to ***Forms & Supplements*** section of the catalog for the check sheets.
- Multipoint sets are manufactured to order and are not eligible for return.
- Add 10% for split finish on active and full dummy functions.

Sectional Dummy Sets

- Sectional dummy sets are the same for all lock applications. See ***Tubular Sectional Passage & Dummy Sets*** for more details.
- Full dummy sets consist of two half dummy sets mounted on either side of the door. Lever sets have one left hand and one right hand lever.
- For half dummy set, specify required handing.

Hardware Schedule Example

		STYLE							
		EXTERIOR				INTERIOR			
FUNCTION DESCRIPTION	TYPE - FUNCTION	LEVER - KNOB HANDLE	ESCUTCHEON ROSETTE	CYLINDER E.E.	TRIM	LEVER - KNOB HANDLE	ESCUTCHEON ROSETTE	THUMB TURN CYLINDER	TRIM
ACTIVE DUMMY	SPMP-AD	23015	20050	NA	NA	23015	20050	NA	NA
FULL DUMMY	SPMP-FD	23015	20050	NA	NA	23015	20050	NA	NA
HALF DUMMY	SPMP-HD	NA	NA	NA	NA	23015	20050	NA	NA

Flush Pull Entry & Privacy Sets

FP-EN Flush Pull - Entry Set

Exterior Interior

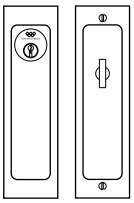

You Select

- Flush pull escutcheon - exterior & interior
  Flush pull sets are priced by the size of the escutcheons.

Included With Set

- Through bolts
- 2002CPDL - combination lock w/ edge pull
- Mortise cylinder with cylinder cap - exterior
- Mortise cylinder blocking ring - exterior
- Low profile thumb turn - interior
- Mortise Lock strike plate - Not included when 2002CPDS is ordered - (See FP-SS below)

Pricing

Code	Description & Notes	Small	Medium	Large
FP-EN	Entry Set	NA	$1,227	$1,406

2001SDL - Sliding door lock, no edge pull - ***Subtract $110***
LL - Less Lock - ***Subtract $385***

FP-PR Flush Pull - Privacy Set

Exterior Interior

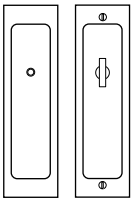

You Select

- Flush pull escutcheon - exterior & interior
  Flush pull sets are priced by the size of the escutcheons.

Included With Set

- Through bolts
- 2002CPDL - combination lock w/ edge pull
- Emergency egress button - exterior
- E.E. button collar - exterior
- Low profile thumb turn - interior
- Mortise Lock strike plate - Not included when 2002CPDS is ordered - (See FP-SS below)

Pricing

Code	Description & Notes	Small	Medium	Large
FP-PR	Privacy Set	NA	$1,128	$1,307

2001SDL - Sliding door lock, no edge pull - ***Subtract $110***
LL - Less Lock - ***Subtract $385***

FP-PT Flush Pull - Patio Set

Exterior Interior

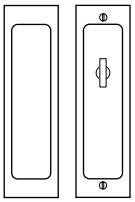

You Select

- Flush pull escutcheon - exterior & interior
  Flush pull sets are priced by the size of the escutcheons.

Included With Set

- Through bolts
- 2002CPDL - combination lock w/ edge pull
- Low profile thumb turn - interior
- Mortise Lock strike plate - Not included when 2002CPDS is ordered - (See FP-SS below)

Pricing

Code	Description & Notes	Small	Medium	Large
FP-PT	Privacy Set	NA	$1,059	$1,239

2001SDL - Sliding door lock, no edge pull - ***Subtract $110***
LL - Less Lock - ***Subtract $385***

FP-SS Flush Pull - Strike Set - Double Door

Exterior Interior

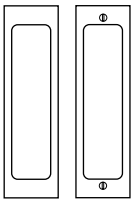

You Select

- Flush pull escutcheon - exterior & interior
  Flush pull sets are priced by the size of the escutcheons.

Included With Set

- Through bolts
- 2002CPDS - mortise strike w/ edge pull

Pricing

Code	Description & Notes	Small	Medium	Large
FP-SS	Strike Set	NA	$869	$1,048

Flush Pull Entry & Privacy Sets

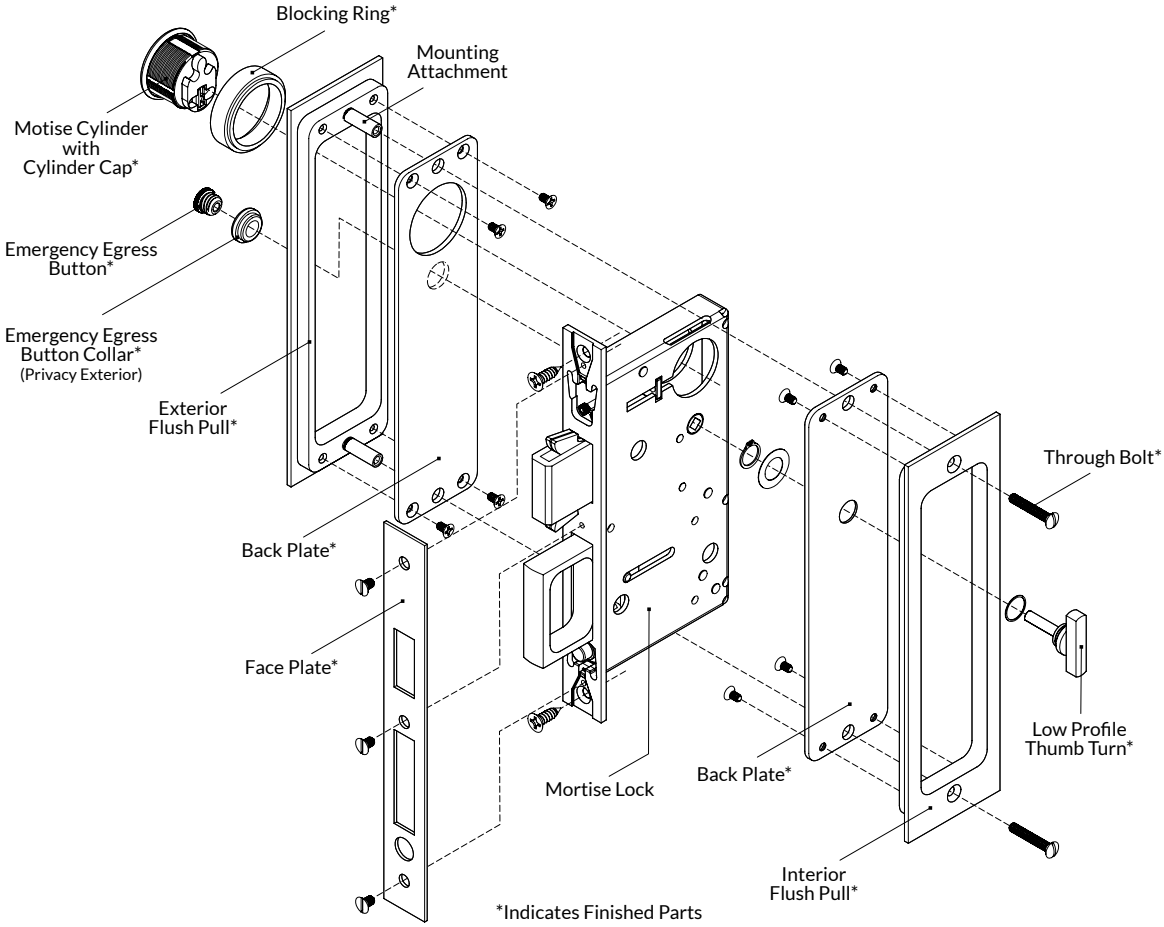

Flush pull sets are designed to work on sliding pocket doors. Entry, privacy and patio sets use a 2002CPDL lock or a smaller 2001SDL lock. See ***Locks & Latches*** for details on these options.

The pricing for each set is determined by the size of the flush pull plates. Sizes: S = Small | M = Medium | L = Large. Measurements may vary depending on the collection chosen. Small flush pulls cannot be used with 2002 locks.

- Standard backset for 2001 & 2002 locks: 2-1/2" or 2-3/4".
- Doors must be no thinner than 1-3/8". Doors must be at least 1-3/4" for fully recessed plates - only available in Manor collection.
- Through bolting is standard on all flush pulls.
- ***Add $55*** for each plate with concealed screws. Not available on all flush pull sizes and applications.
- ***Add $165*** - 2" backset | ***Add $550*** - 3-3/4" backset | ***Add $880*** - 5" backset | ***Add $1,100*** - 6" backset
- ***Add $138*** for each plate with KN (Knurl) edge details.
- For split finish orders, the face and strike plates are finished subject to door handing. ***Add 10% for split finish on all functions***.

Hardware Schedule Example

		STYLE							
		EXTERIOR				INTERIOR			
FUNCTION DESCRIPTION	TYPE - FUNCTION	LEVER - KNOB HANDLE	ESCUTCHEON ROSETTE	CYLINDER E.E.	TRIM	LEVER - KNOB HANDLE	ESCUTCHEON ROSETTE	THUMB TURN CYLINDER	TRIM
ENTRY	FP-EN	NA	21510	CYL	NA	NA	21510	22045	NA
PRIVACY	FP-PR	NA	21510	22006	NA	NA	21510	22045	NA
PATIO	FP-PT	NA	21510	NA	NA	NA	21510	22045	NA
STRIKE SET	FP-SS	NA	21510	NA	NA	NA	21510	NA	NA

Flush Pull Passage & Dummy Sets

FP-PS Flush Pull - Passage Set

Exterior Interior

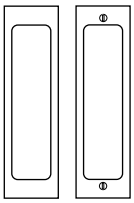

You Select

- Flush pull escutcheon - exterior & interior
  Flush pull sets are priced by the size of the escutcheons.

Included With Set

- Through bolts
- 2000 mortise edge pull

Pricing

Code	Description & Notes	Small	Medium	Large
FP-PS	Passage Set	$869	$988	$1,167
	2002CPDP edge pull - ***Add $193***			
	LL - Less Lock - ***Subtract $275***			

FP-FD Flush Pull - Full Dummy Set

Exterior Interior

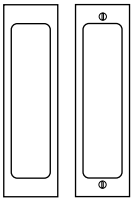

You Select

- Flush pull escutcheon - exterior & interior
  Flush pull sets are priced by the size of the escutcheons.

Included With Set

- Through bolts

Pricing

Code	Description & Notes	Small	Medium	Large
FP-FD	Full Dummy Set	$392	$510	$690

FP-HD Flush Pull - Half Dummy Set

Exterior Interior

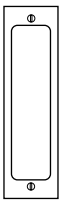

You Select

- Flush pull escutcheon - interior
  Flush pull sets are priced by the size of the escutcheons.

Included With Set

- Surface mount screws

Pricing

Code	Description & Notes	Small	Medium	Large
FP-HD	Half Dummy Set	$196	$255	$345

Flush Pull Passage & Dummy Sets

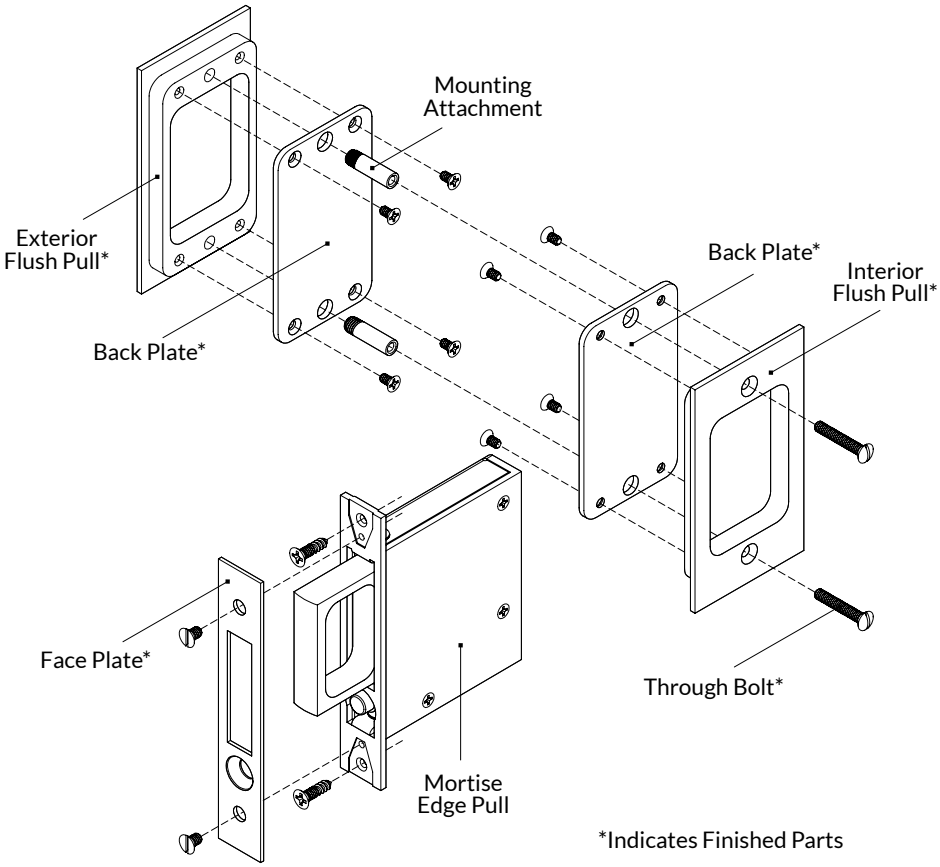

Flush pull sets are designed to work on sliding pocket doors. Passage sets use a 2000 mortise edge pull. A 2002CPDP may be substituted to match entry, privacy or patio sets. See ***Locks & Latches*** for details on these options.

The pricing for each set is determined by the size of the flush pull plates. Sizes: S = Small | M = Medium | L = Large. Measurements may vary depending on the collection chosen. As depicted above, edge pulls do not have through bolt clearance, so small edge pulls must be installed above or below the edge pull.

- Substitute 2002CPDP edge pull, ***Add $193.*** Small flush pulls cannot be used with 2002 locks.
- Doors must be no thinner than 1-3/8". Doors must be at least 1-3/4" for fully recessed plates - only available in Manor collection.
- Through bolting is standard on flush pulls. A half dummy flush pull is attached to the door with surface mount screws.
- ***Add $55*** for each plate with concealed screws. Not available on all flush pull sizes and applications.
- ***Add $138*** for each plate with KN (Knurl) edge details.
- For split finish orders, the face and strike plates are finished subject to door handing. ***Add 10%*** for split finish on all functions.

Hardware Schedule Example

		STYLE							
		EXTERIOR				INTERIOR			
FUNCTION DESCRIPTION	TYPE - FUNCTION	LEVER - KNOB HANDLE	ESCUTCHEON ROSETTE	CYLINDER E.E.	TRIM	LEVER - KNOB HANDLE	ESCUTCHEON ROSETTE	THUMB TURN CYLINDER	TRIM
PASSAGE	FP-PS	NA	21510	NA	NA	NA	21510	NA	NA
FULL DUMMY	FP-FD	NA	21510	NA	NA	NA	21510	NA	NA
HALF DUMMY	FP-HD	NA	NA	NA	NA	NA	21510	NA	NA

Push Plate Sets

PU-FD Push Plate - Full Dummy Set

Exterior Interior

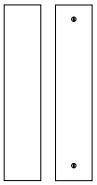

You Select

- Escutcheon - exterior & interior
  Push plate sets are priced by the size of the escutcheons.

Included With Set

- Through bolts or surface mount screws

Pricing

Code	Description & Notes Tier I	S	N	M	L
PU-FD	Push Plate x Push Plate	$441	$459	$537	$657

PU-HD Push Plate - Half Dummy Set

Exterior Interior

You Select

- Escutcheon - exterior & interior
  Push plate sets are priced by the size of the escutcheons.

Included With Set

- Surface mount screws

Pricing

Code	Description & Notes Tier I	S	N	M	L
PU-FD	Push Plate	$221	$229	$268	$328

Push plates are commonly used on swinging doors with no latches and are intended to reduce the paint or finish wear on the door surface.

S = Small Escutcheon N = Narrow Escutcheon M = Medium Escutcheon L = Large Escutcheon

- Custom sized plates priced on application.
- Through bolting is standard for escutcheon sets, but surface mount is available with no upcharge if requested.
- **Add $138** for each plate with KN (Knurl) edge details.
- For split finish orders, the face and strike plates are finished subject to door handing. **Add 10%** for split finish on all functions.

Push Plate Sets

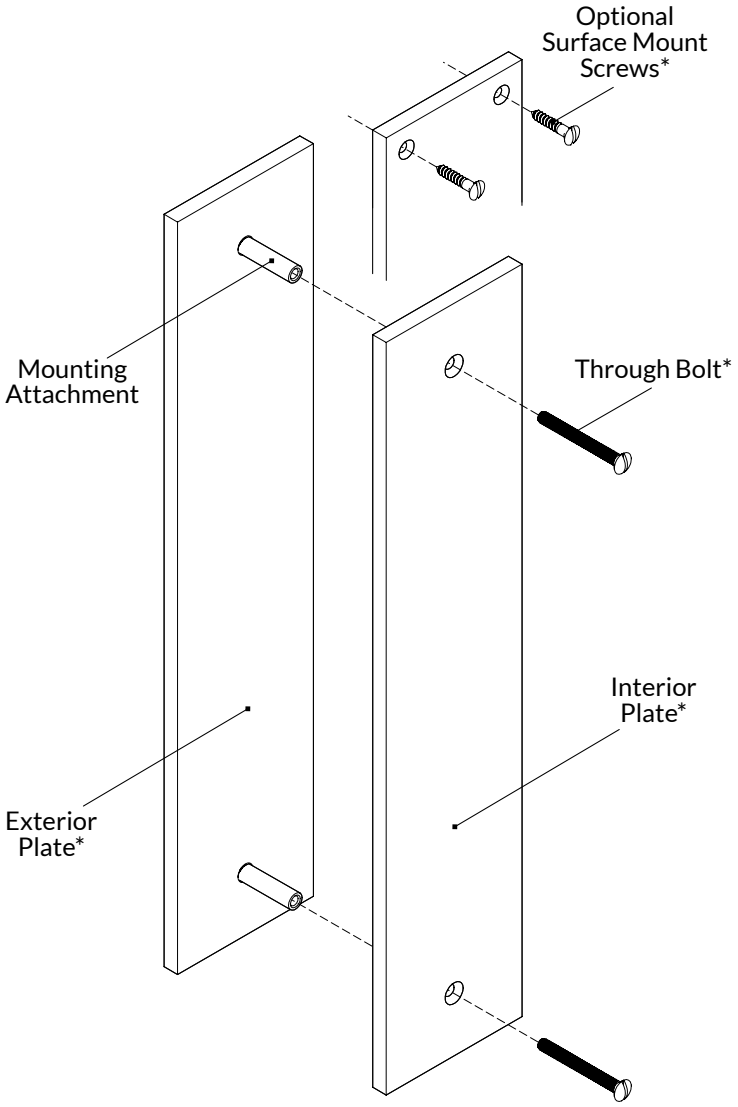

*Indicates Finished Parts

Hardware Schedule Example

		STYLE							
		EXTERIOR				INTERIOR			
FUNCTION DESCRIPTION	TYPE - FUNCTION	LEVER - KNOB HANDLE	ESCUTCHEON ROSETTE	CYLINDER E.E.	TRIM	LEVER - KNOB HANDLE	ESCUTCHEON ROSETTE	THUMB TURN CYLINDER	TRIM
PUSH x PUSH FULL DUMMY	PU-FD	NA	21501	NA	NA	NA	21501	NA	NA
PUSH HALF DUMMY	PU-HD	NA	21501	NA	NA	NA	NA	NA	NA

Pull Plate Sets

PLPL-FD Pull Plate x Pull Plate - Full Dummy

Exterior	Interior	You Select	Included With Set
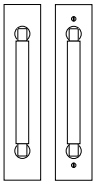		• Escutcheon - exterior & interior • Cabinet pull - exterior • Back to back pull - interior	• Through bolts or surface mount screws • Back to back mounting hardware

Pricing

Code	Description		N	M	L
PLPL-FD	Pull Plate x Pull Plate (back to back pulls)	Add price of 2 pulls to:	$459+	$537+	$657+

PUPL-FD Push Plate x Pull Plate - Full Dummy

Exterior	Interior	You Select	Included With Set
		• Escutcheon - exterior & interior • Cabinet pull - Interior	• Through bolts or surface mount screws

Pricing

Code	Description		N	M	L
PUPL-FD	Push Plate x Pull Plate	Add price of 1 pull to:	$459+	$537+	$657+

PL-HD Pull Plate - Half Dummy

Exterior	Interior	You Select	Included With Set
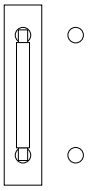		• Escutcheon - exterior • Cabinet pull - exterior	• Through bolts • Bolt covers

Pricing

Code	Description		N	M	L
PUPL-FD	Pull Plate (through bolts with bolt covers)	Add price of 1 pull to:	$229+	$268+	$328+

Pull plate sets combine escutcheon plates with appliance pulls. Some collections are not available for back to back applications. To assure firm pull strength, it is recommended that appliance pulls be used with through or back to back bolting.

N = Narrow Escutcheon M = Medium Escutcheon L = Large Escutcheon

- Custom sized plates for larger appliance pulls priced on application.
- Surface mount screws are available for the plates with no upcharge, but through bolting the pulls is still recommended.
- Pricing for each set is determined by appliance pull(s) selected along with the listed price for the size of the plates used. Small plates cannot be used for pull plate applications.
- **Add $138** for each plate with KN (Knurl) edge details.
- **Add 10%** for split finish on all functions.

Pull Plate Sets

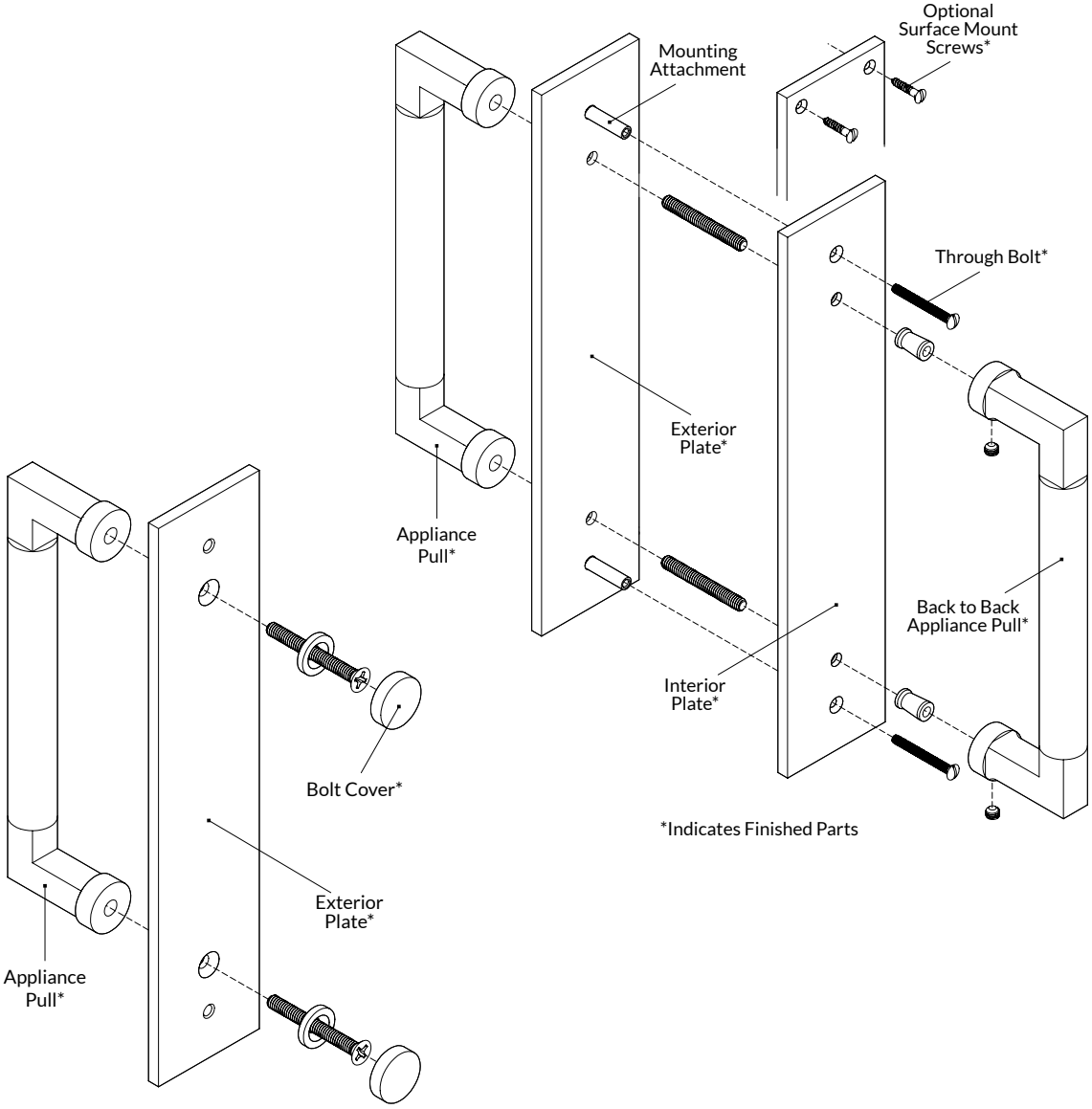

Hardware Schedule Example

		STYLE							
		EXTERIOR				INTERIOR			
FUNCTION DESCRIPTION	TYPE - FUNCTION	LEVER - KNOB HANDLE	ESCUTCHEON ROSETTE	CYLINDER E.E.	TRIM	LEVER - KNOB HANDLE	ESCUTCHEON ROSETTE	THUMB TURN CYLINDER	TRIM
PULL x PULL FULL DUMMY	PLPL-FD	7813	21501	NA	NA	7813	21501	NA	NA
PUSH x PULL FULL DUMMY	PUPL-FD	NA	21501	NA	NA	7813	21501	NA	NA
PULL HALF DUMMY	PU-HD	7813	21501	NA	NA	NA	NA	NA	NA

Escutcheon Screen Door Sets

ESD-PT Escutcheon Screen Door - Patio Set

Exterior Interior

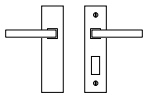

You Select

- **Knob or lever - exterior & interior**
- Screen door escutcheon - exterior & interior
- Thumb Turn - interior

Tier level determined by the knob or lever for each set.

Included With Set

- Mortise lock - specify backset
- Mortise lock face plate
- Spindle
- Through bolts or surface mount screws
- Strike plate & dust box

Pricing

Code	Description & Notes	Tier I	Tier II	Tier III
ESD-PT	Patio Function	$1,132	$1,251	$1,430

ESD-PS Escutcheon Screen Door - Passage Set

Exterior Interior

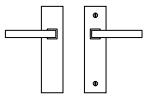

You Select

- **Knob or lever - exterior & interior**
- Screen door escutcheon - exterior & interior

Tier level determined by the knob or lever for each set.

Included With Set

- Mortise lock - specify backset
- Mortise lock face plate
- Spindle
- Through bolts or surface mount screws
- Strike plate & dust box

Pricing

Code	Description & Notes	Tier I	Tier II	Tier III
ESD-PS	Passage Function	$1,071	$1,191	$1,371

ESD-FD Escutcheon Screen Door - Full Dummy Set

Exterior Interior

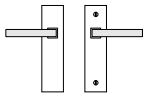

You Select

- **Fixed knob or lever - exterior & interior**
- Screen door escutcheon - exterior & interior

Tier level determined by the knob or lever for each set.

Included With Set

- Escutcheon dummy mounting assembly
- Through bolts or surface mount screws

Pricing

Code	Description & Notes	Tier I	Tier II	Tier III
ESD-FD	Passage Function	$788	$908	$1,086

ESD-HD Escutcheon Screen Door - Half Dummy Set

Exterior Interior

You Select

- **Fixed knob or lever - interior**
- Screen door escutcheon - exterior & interior

Tier level determined by the knob or lever for each set.

Included With Set

- Escutcheon dummy mounting assembly
- Surface mount screws

Pricing

Code	Description & Notes	Tier I	Tier II	Tier III
ESD-HD	Passage Function	$394	$453	$543

Screen door hardware is generally used on thin wooden doors. Traditionally it can be locked from the interior but does not feature emergency access from the exterior. Screen doors are often too thin for tubular latches and the thin 6500 series mortise lock is recommended.

- Pricing for each set is determined by the tier level for the knob or lever. See ***Door Knobs*** or ***Door Levers*** section to select.
- Available backsets for 6500 mortise locks: 1-1/2", 1-3/4" or 2".
- Available backsets for 9500 mortise locks: 2-1/2" or 2-3/4".
- For split finish orders, the face and strike plates are finished subject to door handing. **Add 10%** for split finish on all functions.
- **Add $138** for each plate with KN (Knurl) edge details.
- Lever x knob sets priced per application.

Escutcheon Screen Door Sets

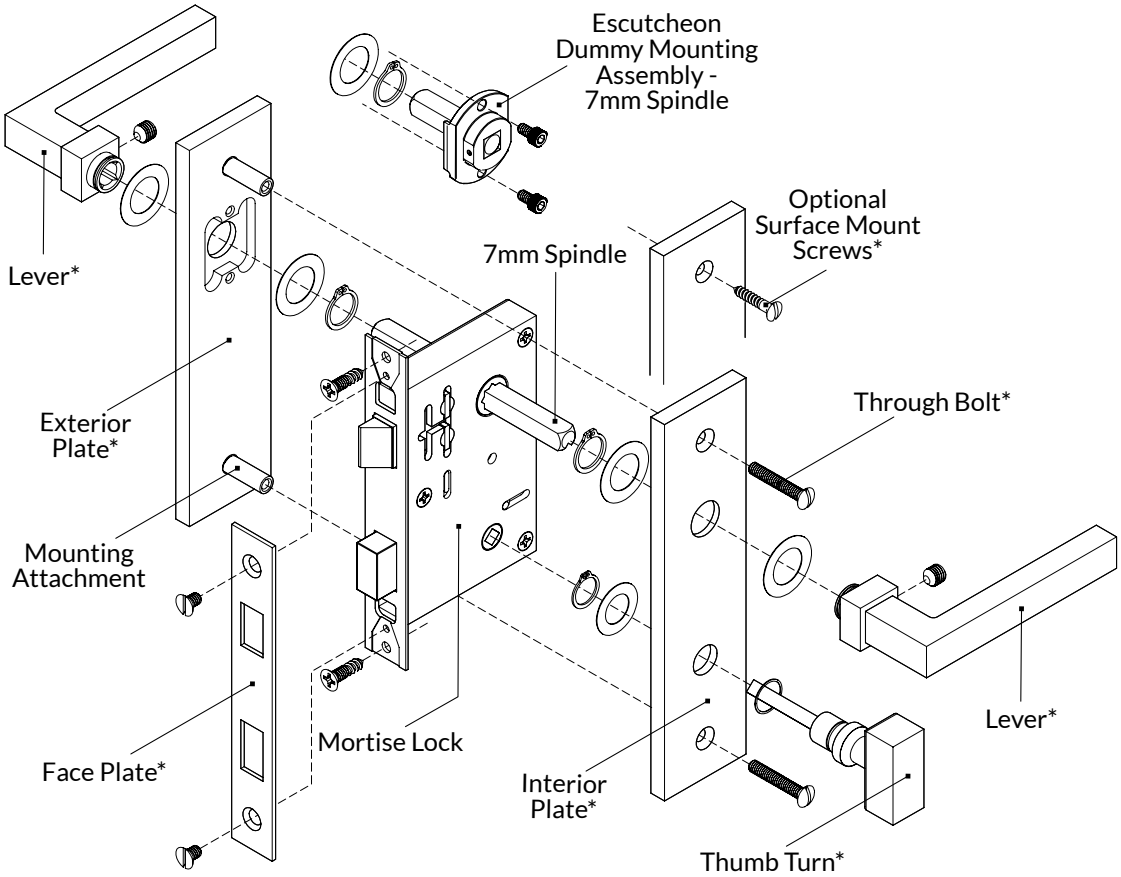

*Indicates Finished Parts

- Screen door levers and knobs are a smaller size and lower projection than standards. A 7mm spindle is standard for these items. Lever set screws are centered and can be used interchangeably for left or right hand applications.
- Spring assists are not available on doors under 1-3/8" thick and are not recommended for screen door applications.
- Through bolting is standard for escutcheon sets, but surface mount is available with no upcharge if requested. Half dummy plates must be surface mounted.
- Full dummy sets consist of two half dummy plates mounted on either side of the door.

Hardware Schedule Example

		STYLE							
		EXTERIOR				INTERIOR			
FUNCTION DESCRIPTION	TYPE - FUNCTION	LEVER - KNOB HANDLE	ESCUTCHEON ROSETTE	CYLINDER E.E.	TRIM	LEVER - KNOB HANDLE	ESCUTCHEON ROSETTE	THUMB TURN CYLINDER	TRIM
PATIO	ESD-PT	23108	21516	NA	NA	23108	21516	22009	NA
PASSAGE	ESD-PS	23108	21516	NA	NA	23108	21516	NA	NA
FULL DUMMY	ESD-FD	23108	21516	NA	NA	23108	21516	NA	NA
HALF DUMMY	ESD-HD	NA	NA	NA	NA	23108	21516	NA	NA

Sectional Screen Door Sets

SSD-PT Sectional Screen Door - Patio Set

Exterior Interior

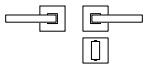

You Select

- **Knob or lever - exterior & interior**
- Rosette - exterior & interior
- Mortise bolt trim plate - interior
- Thumb Turn - interior

Tier level determined by the knob or lever for each set.

Included With Set

- Mortise lock - specify backset
- Mortise lock face plate
- Spindle
- Surface mount screws
- Strike plate & dust box

Pricing

Code	Description & Notes	Tier I	Tier II	Tier III
SSD-PT	Patio Function	$1,020	$1,139	$1,318

SSD-PS Sectional Screen Door - Passage Set

Exterior Interior

You Select

- **Knob or lever - exterior & interior**
- Rosette - exterior & interior

Tier level determined by the knob or lever for each set.

Included With Set

- Mortise lock - specify backset
- Mortise lock face plate
- Spindle
- Surface mount screws
- Strike plate & dust box

Pricing

Code	Description & Notes	Tier I	Tier II	Tier III
SSD-PS	Passage Function	$949	$1,068	$1,247

SSD-FD Sectional Screen Door - Full Dummy Set

Exterior Interior

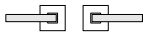

You Select

- **Knob or lever - exterior & interior**
- Rosette - exterior & interior

Tier level determined by the knob or lever for each set.

Included With Set

- Escutcheon dummy mounting assembly
- Through bolts or surface mount screws

Pricing

Code	Description & Notes	Tier I	Tier II	Tier III
SSD-FD	Passage Function	$525	$645	$824

SSD-HD Sectional Screen Door - Half Dummy Set

Exterior Interior

You Select

- **Knob or lever - interior**
- Rosette - interior

Tier level determined by the knob or lever for each set.

Included With Set

- Escutcheon dummy mounting assembly
- Surface mount screws

Pricing

Code	Description & Notes	Tier I	Tier II	Tier III
SSD-HD	Passage Function	$252	$322	$411

Screen door hardware is generally used on thin wooden doors. Traditionally it can be locked from the interior but does not feature emergency access from the exterior. Screen doors are often too thin for tubular latches and the thin 6500 series mortise lock is recommended.

- Pricing for each set is determined by the tier level for the knob or lever. See ***Door Knobs*** or ***Door Levers*** section to select.
- Available backsets for 6500 mortise locks: 1-1/2", 1-3/4" or 2".
- Available backsets for 9500 mortise locks: 2-1/2" or 2-3/4".
- For split finish orders, the face and strike plates are finished subject to door handing. **Add 10%** for split finish on all functions.
- **Add $138** for each plate with KN (Knurl) edge details.
- Lever x knob sets priced per application.

Sectional Screen Door Sets

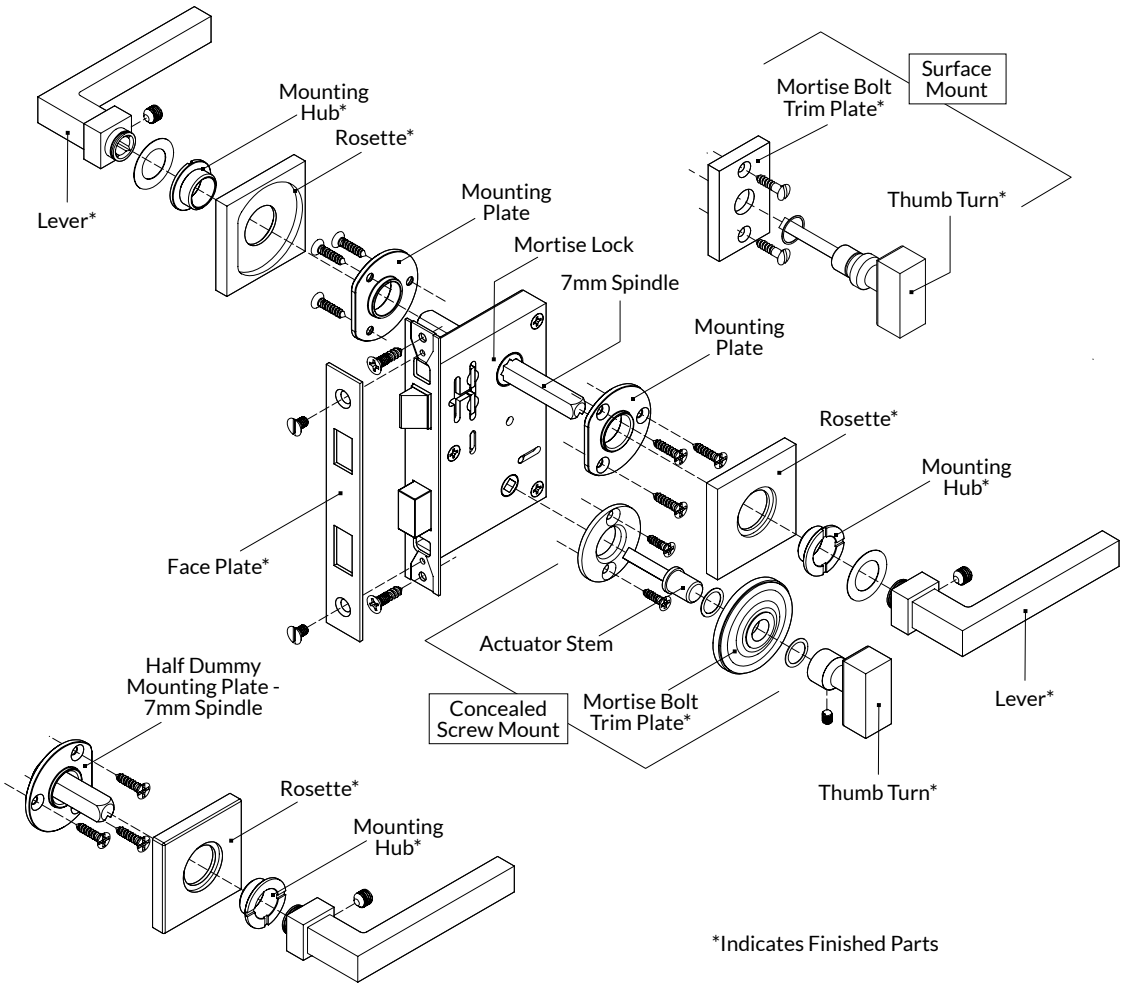

- Screen door levers and knobs are a smaller size and lower projection than standards. A 7mm spindle is standard for these items. Lever set screws are centered and can be used interchangeably for left or right hand applications.
- Spring assists are not available on doors under 1-3/8" thick and are not recommended for screen door applications.
- Through bolting is not available with sectional trim. All mounting plates must be surface mounted and the screws may need to be clipped to avoid hitting the lock body.
- Full dummy sets consist of two half dummy mounting plates mounted on either side of the door.

Hardware Schedule Example

		STYLE							
		EXTERIOR				INTERIOR			
FUNCTION DESCRIPTION	TYPE - FUNCTION	LEVER - KNOB HANDLE	ESCUTCHEON ROSETTE	CYLINDER E.E.	TRIM	LEVER - KNOB HANDLE	ESCUTCHEON ROSETTE	THUMB TURN CYLINDER	TRIM
PATIO	SSD-PT	23108	20050	NA	NA	23108	20050	22009	20032
PASSAGE	SSD-PS	23108	20050	NA	NA	23108	20050	NA	NA
FULL DUMMY	SSD-FD	23108	20050	NA	NA	23108	20050	NA	NA
HALF DUMMY	SSD-HD	NA	NA	NA	NA	23108	20050	NA	NA