HL1ANNEM VER..C RF HF

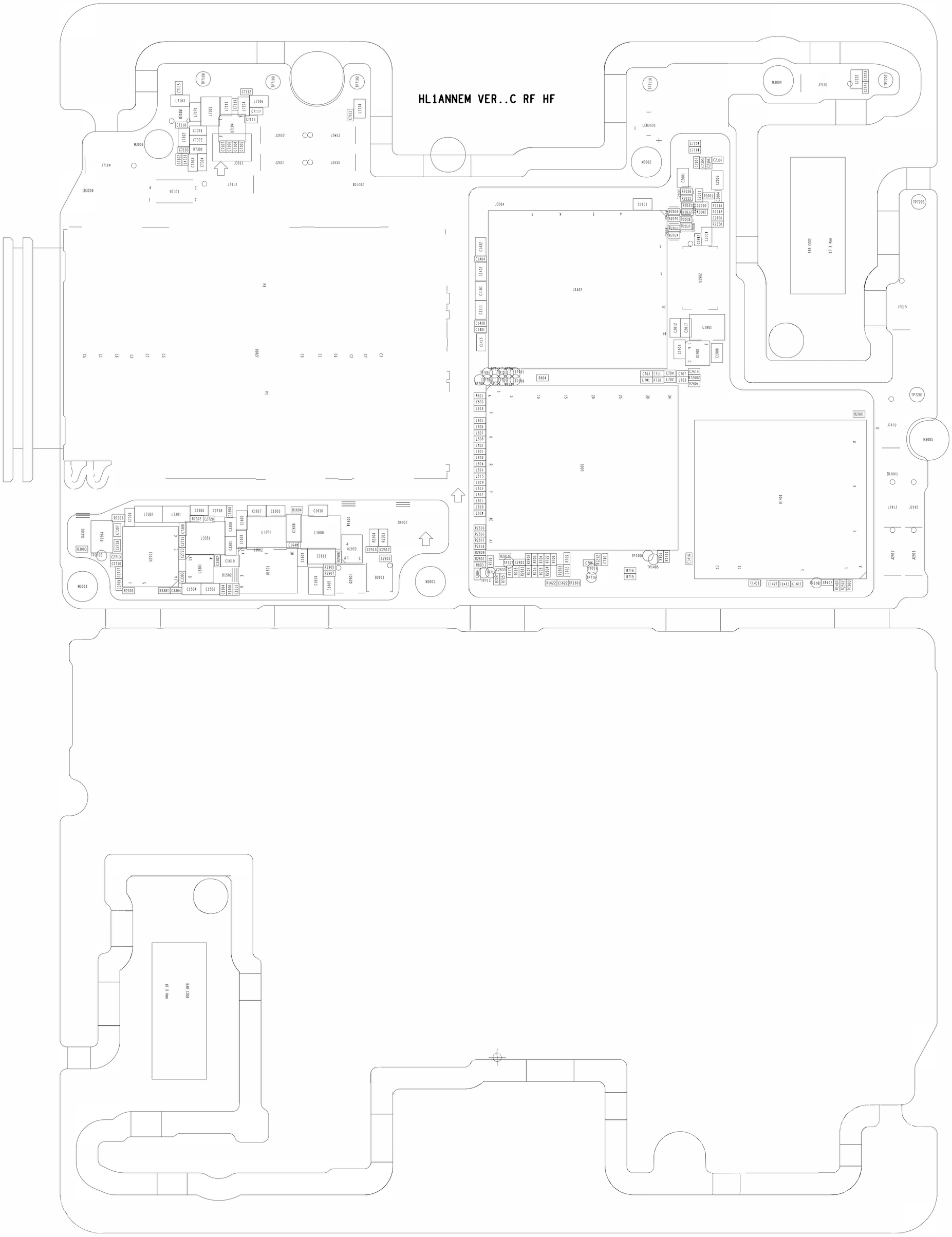

p20 lite
VC RF HF

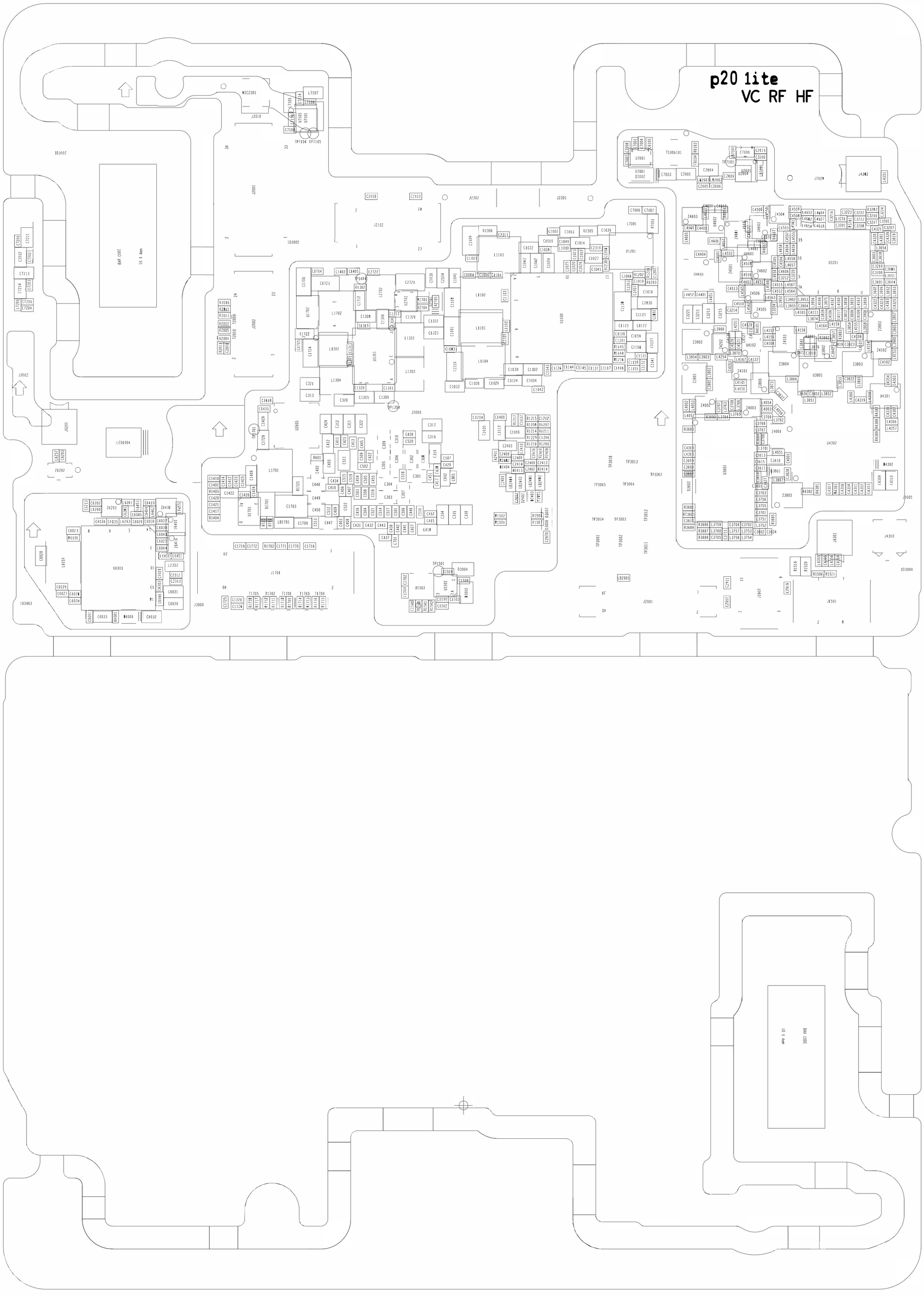

3. SOC PWR1

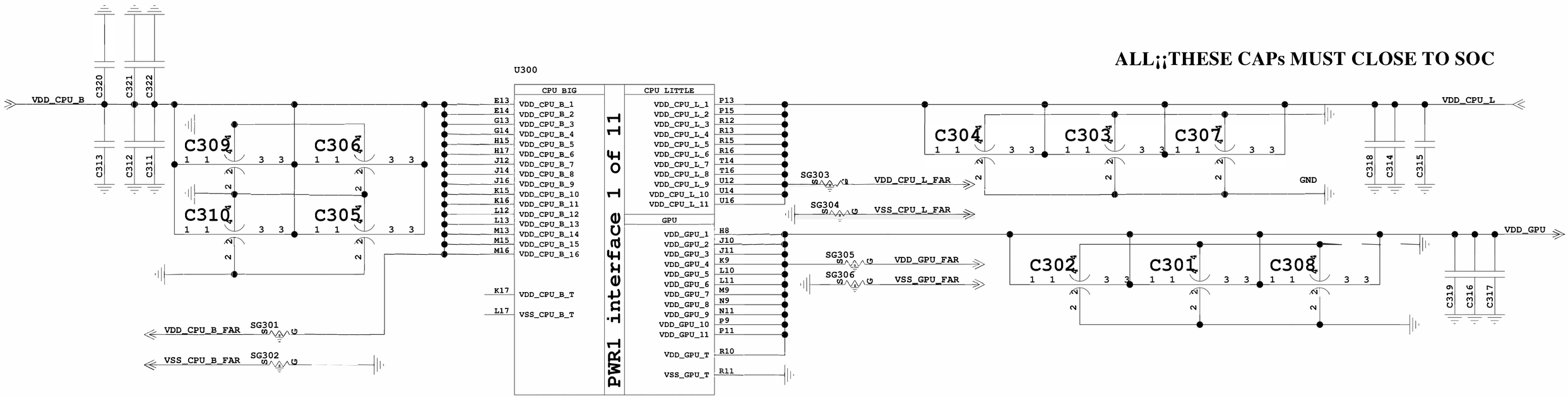
ALL¡¡THESE CAPs MUST CLOSE TO SOC
U300
PWR1 interface 1 of 11
CPU BIG
CPU LITTLE
GPU
VDD_CPU_B
VDD_CPU_L
VDD_GPU
VDD_CPU_B_FAR
VSS_CPU_B_FAR
VDD_CPU_L_FAR
VSS_CPU_L_FAR
VDD_GPU_FAR
VSS_GPU_FAR
GND
SG301
SG302
SG303
SG304
SG305
SG306
C320
C321
C322
C313
C312
C311
C309
C306
C310
C305
C304
C303
C307
C302
C301
C308
C318
C314
C315
C319
C316
C317
VDD_CPU_B_1
VDD_CPU_B_2
VDD_CPU_B_3
VDD_CPU_B_4
VDD_CPU_B_5
VDD_CPU_B_6
VDD_CPU_B_7
VDD_CPU_B_8
VDD_CPU_B_9
VDD_CPU_B_10
VDD_CPU_B_11
VDD_CPU_B_12
VDD_CPU_B_13
VDD_CPU_B_14
VDD_CPU_B_15
VDD_CPU_B_16
VDD_CPU_B_T
VSS_CPU_B_T
VDD_CPU_L_1
VDD_CPU_L_2
VDD_CPU_L_3
VDD_CPU_L_4
VDD_CPU_L_5
VDD_CPU_L_6
VDD_CPU_L_7
VDD_CPU_L_8
VDD_CPU_L_9
VDD_CPU_L_10
VDD_CPU_L_11
VDD_GPU_1
VDD_GPU_2
VDD_GPU_3
VDD_GPU_4
VDD_GPU_5
VDD_GPU_6
VDD_GPU_7
VDD_GPU_8
VDD_GPU_9
VDD_GPU_10
VDD_GPU_11
VDD_GPU_T
VSS_GPU_T

4. SOC PWR2

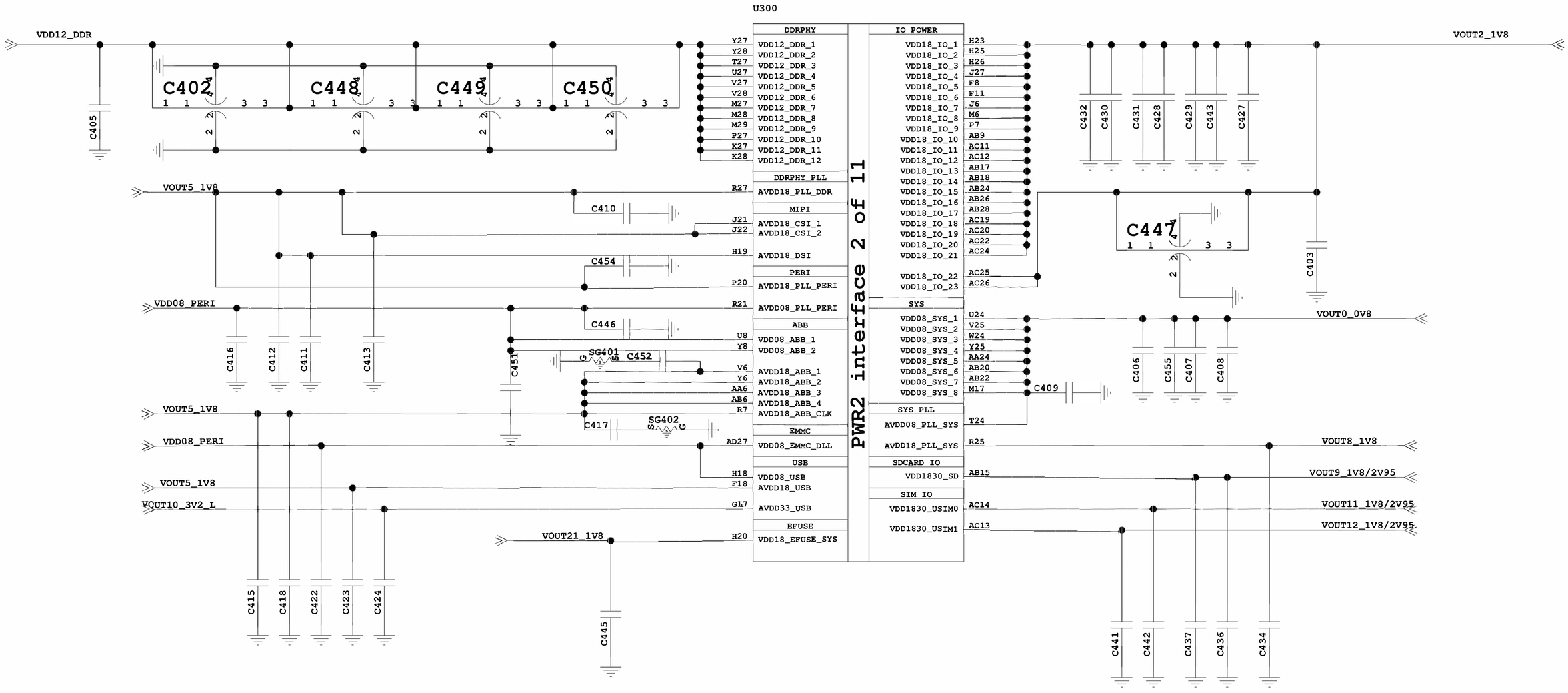
U300
PWR2 interface 2 of 11
DDRPHY
VDD12_DDR_1
VDD12_DDR_2
VDD12_DDR_3
VDD12_DDR_4
VDD12_DDR_5
VDD12_DDR_6
VDD12_DDR_7
VDD12_DDR_8
VDD12_DDR_9
VDD12_DDR_10
VDD12_DDR_11
VDD12_DDR_12
DDRPHY_PLL
AVDD18_PLL_DDR
MIPI
AVDD18_CSI_1
AVDD18_CSI_2
AVDD18_DSI
PERI
AVDD18_PLL_PERI
AVDD08_PLL_PERI
ABB
VDD08_ABB_1
VDD08_ABB_2
AVDD18_ABB_1
AVDD18_ABB_2
AVDD18_ABB_3
AVDD18_ABB_4
AVDD18_ABB_CLK
EMMC
VDD08_EMMC_DLL
USB
VDD08_USB
AVDD18_USB
AVDD33_USB
EFUSE
VDD18_EFUSE_SYS
IO POWER
VDD18_IO_1
VDD18_IO_2
VDD18_IO_3
VDD18_IO_4
VDD18_IO_5
VDD18_IO_6
VDD18_IO_7
VDD18_IO_8
VDD18_IO_9
VDD18_IO_10
VDD18_IO_11
VDD18_IO_12
VDD18_IO_13
VDD18_IO_14
VDD18_IO_15
VDD18_IO_16
VDD18_IO_17
VDD18_IO_18
VDD18_IO_19
VDD18_IO_20
VDD18_IO_21
VDD18_IO_22
VDD18_IO_23
SYS
VDD08_SYS_1
VDD08_SYS_2
VDD08_SYS_3
VDD08_SYS_4
VDD08_SYS_5
VDD08_SYS_6
VDD08_SYS_7
VDD08_SYS_8
SYS PLL
AVDD08_PLL_SYS
AVDD18_PLL_SYS
SDCARD IO
VDD1830_SD
SIM IO
VDD1830_USIM0
VDD1830_USIM1
VDD12_DDR
VOUT5_1V8
VDD08_PERI
VOUT10_3V2_L
VOUT21_1V8
VOUT2_1V8
VOUT0_0V8
VOUT8_1V8
VOUT9_1V8/2V95
VOUT11_1V8/2V95
VOUT12_1V8/2V95
C402
C448
C449
C450
C447
C405
C403
C410
C454
C446
C452
C451
C417
C409
C416
C412
C411
C413
C415
C418
C422
C423
C424
C445
C441
C442
C437
C436
C434
C432
C430
C431
C428
C429
C443
C427
C406
C455
C407
C408
SG401
SG402

5. SOC PWR3

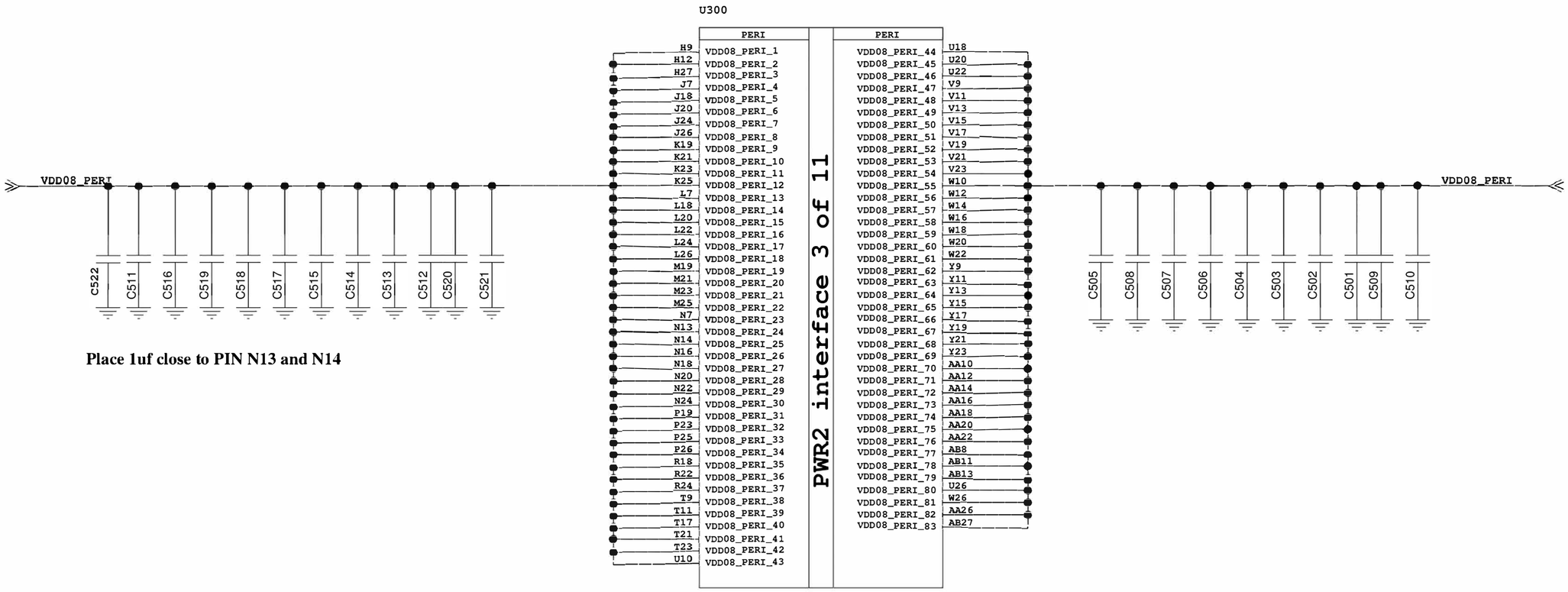

Place 1uf close to PIN N13 and N14

6. SOC HS&DDR

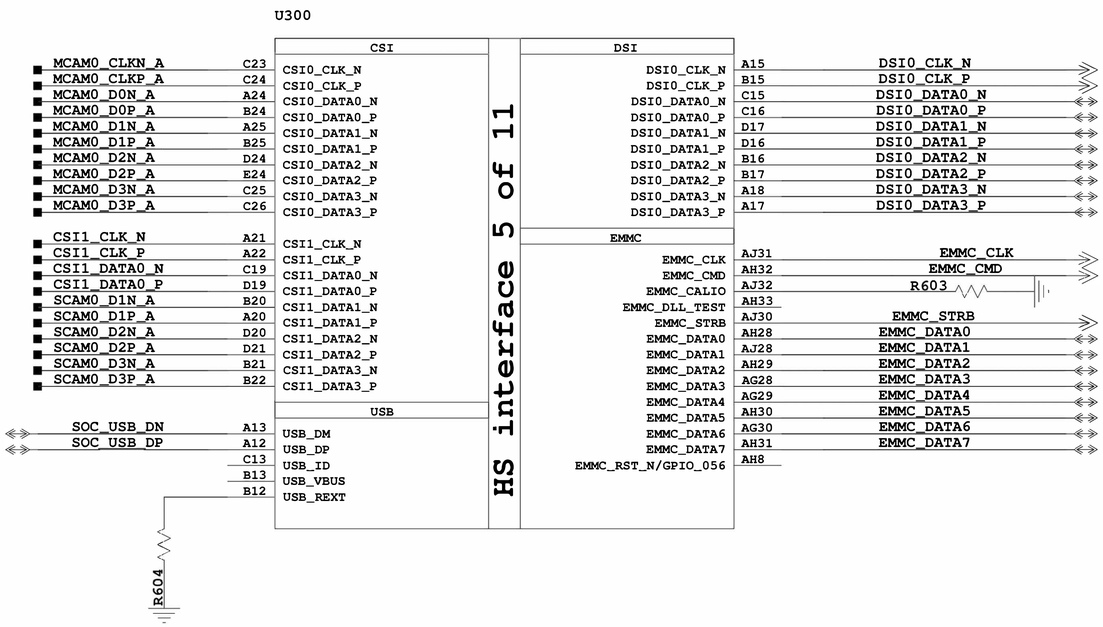
U300
HS interface 5 of 11
CSI
MCAM0_CLKN_A C23 CSI0_CLK_N
MCAM0_CLKP_A C24 CSI0_CLK_P
MCAM0_D0N_A A24 CSI0_DATA0_N
MCAM0_D0P_A B24 CSI0_DATA0_P
MCAM0_D1N_A A25 CSI0_DATA1_N
MCAM0_D1P_A B25 CSI0_DATA1_P
MCAM0_D2N_A D24 CSI0_DATA2_N
MCAM0_D2P_A E24 CSI0_DATA2_P
MCAM0_D3N_A C25 CSI0_DATA3_N
MCAM0_D3P_A C26 CSI0_DATA3_P
CSI1_CLK_N A21 CSI1_CLK_N
CSI1_CLK_P A22 CSI1_CLK_P
CSI1_DATA0_N C19 CSI1_DATA0_N
CSI1_DATA0_P D19 CSI1_DATA0_P
SCAM0_D1N_A B20 CSI1_DATA1_N
SCAM0_D1P_A A20 CSI1_DATA1_P
SCAM0_D2N_A D20 CSI1_DATA2_N
SCAM0_D2P_A D21 CSI1_DATA2_P
SCAM0_D3N_A B21 CSI1_DATA3_N
SCAM0_D3P_A B22 CSI1_DATA3_P
USB
SOC_USB_DN A13 USB_DM
SOC_USB_DP A12 USB_DP
C13 USB_ID
B13 USB_VBUS
B12 USB_REXT
R604
DSI
DSI0_CLK_N A15 DSI0_CLK_N
DSI0_CLK_P B15 DSI0_CLK_P
DSI0_DATA0_N C15 DSI0_DATA0_N
DSI0_DATA0_P C16 DSI0_DATA0_P
DSI0_DATA1_N D17 DSI0_DATA1_N
DSI0_DATA1_P D16 DSI0_DATA1_P
DSI0_DATA2_N B16 DSI0_DATA2_N
DSI0_DATA2_P B17 DSI0_DATA2_P
DSI0_DATA3_N A18 DSI0_DATA3_N
DSI0_DATA3_P A17 DSI0_DATA3_P
EMMC
EMMC_CLK AJ31 EMMC_CLK
EMMC_CMD AH32 EMMC_CMD
EMMC_CALIO AJ32 R603
EMMC_DLL_TEST AH33
EMMC_STRB AJ30 EMMC_STRB
EMMC_DATA0 AH28 EMMC_DATA0
EMMC_DATA1 AJ28 EMMC_DATA1
EMMC_DATA2 AH29 EMMC_DATA2
EMMC_DATA3 AG28 EMMC_DATA3
EMMC_DATA4 AG29 EMMC_DATA4
EMMC_DATA5 AH30 EMMC_DATA5
EMMC_DATA6 AG30 EMMC_DATA6
EMMC_DATA7 AH31 EMMC_DATA7
EMMC_RST_N/GPIO_056 AH8

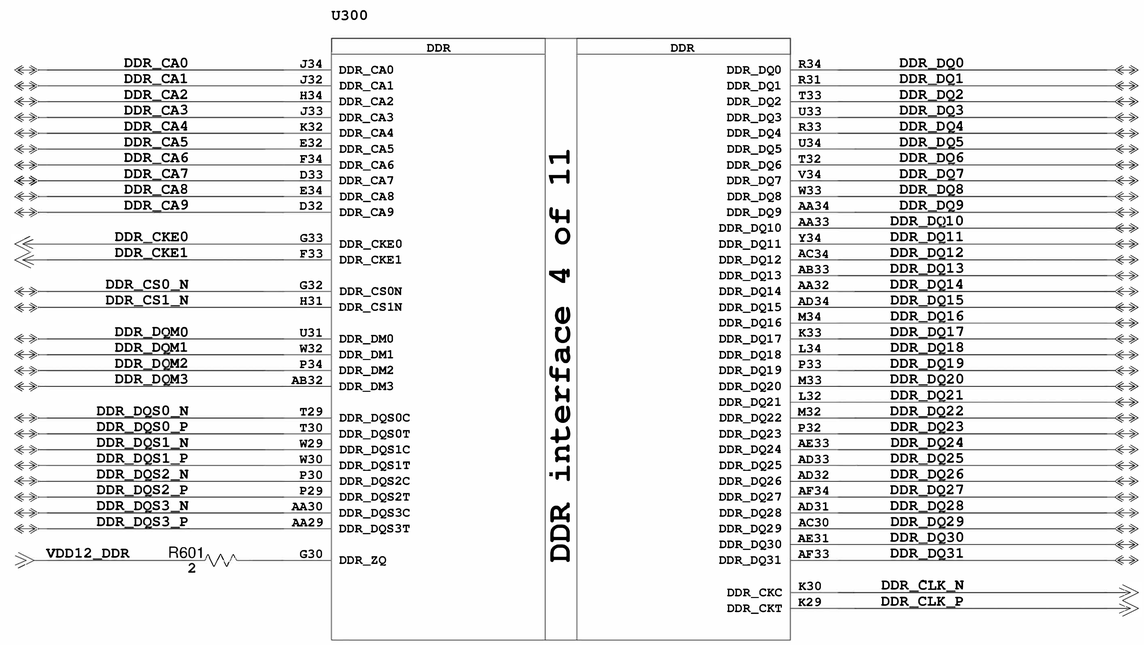
U300
DDR interface 4 of 11
DDR
DDR_CA0 J34 DDR_CA0
DDR_CA1 J32 DDR_CA1
DDR_CA2 H34 DDR_CA2
DDR_CA3 J33 DDR_CA3
DDR_CA4 K32 DDR_CA4
DDR_CA5 E32 DDR_CA5
DDR_CA6 F34 DDR_CA6
DDR_CA7 D33 DDR_CA7
DDR_CA8 E34 DDR_CA8
DDR_CA9 D32 DDR_CA9
DDR_CKE0 G33 DDR_CKE0
DDR_CKE1 F33 DDR_CKE1
DDR_CS0_N G32 DDR_CS0N
DDR_CS1_N H31 DDR_CS1N
DDR_DQM0 U31 DDR_DM0
DDR_DQM1 W32 DDR_DM1
DDR_DQM2 P34 DDR_DM2
DDR_DQM3 AB32 DDR_DM3
DDR_DQS0_N T29 DDR_DQS0C
DDR_DQS0_P T30 DDR_DQS0T
DDR_DQS1_N W29 DDR_DQS1C
DDR_DQS1_P W30 DDR_DQS1T
DDR_DQS2_N P30 DDR_DQS2C
DDR_DQS2_P P29 DDR_DQS2T
DDR_DQS3_N AA30 DDR_DQS3C
DDR_DQS3_P AA29 DDR_DQS3T
VDD12_DDR R601 2 G30 DDR_ZQ
DDR
DDR_DQ0 R34 DDR_DQ0
DDR_DQ1 R31 DDR_DQ1
DDR_DQ2 T33 DDR_DQ2
DDR_DQ3 U33 DDR_DQ3
DDR_DQ4 R33 DDR_DQ4
DDR_DQ5 U34 DDR_DQ5
DDR_DQ6 T32 DDR_DQ6
DDR_DQ7 V34 DDR_DQ7
DDR_DQ8 W33 DDR_DQ8
DDR_DQ9 AA34 DDR_DQ9
DDR_DQ10 AA33 DDR_DQ10
DDR_DQ11 Y34 DDR_DQ11
DDR_DQ12 AC34 DDR_DQ12
DDR_DQ13 AB33 DDR_DQ13
DDR_DQ14 AA32 DDR_DQ14
DDR_DQ15 AD34 DDR_DQ15
DDR_DQ16 M34 DDR_DQ16
DDR_DQ17 K33 DDR_DQ17
DDR_DQ18 L34 DDR_DQ18
DDR_DQ19 P33 DDR_DQ19
DDR_DQ20 M33 DDR_DQ20
DDR_DQ21 L32 DDR_DQ21
DDR_DQ22 M32 DDR_DQ22
DDR_DQ23 P32 DDR_DQ23
DDR_DQ24 AE33 DDR_DQ24
DDR_DQ25 AD33 DDR_DQ25
DDR_DQ26 AD32 DDR_DQ26
DDR_DQ27 AF34 DDR_DQ27
DDR_DQ28 AD31 DDR_DQ28
DDR_DQ29 AC30 DDR_DQ29
DDR_DQ30 AE31 DDR_DQ30
DDR_DQ31 AF33 DDR_DQ31
DDR_CKC K30 DDR_CLK_N
DDR_CKT K29 DDR_CLK_P

7. SOC GPIO

All Pull-Up Resister put Close to Device

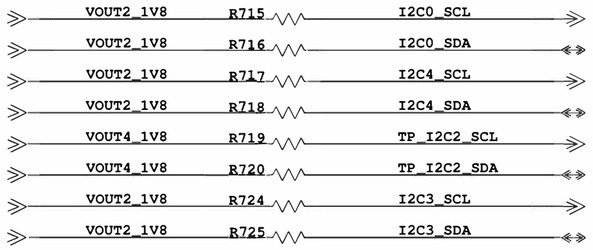

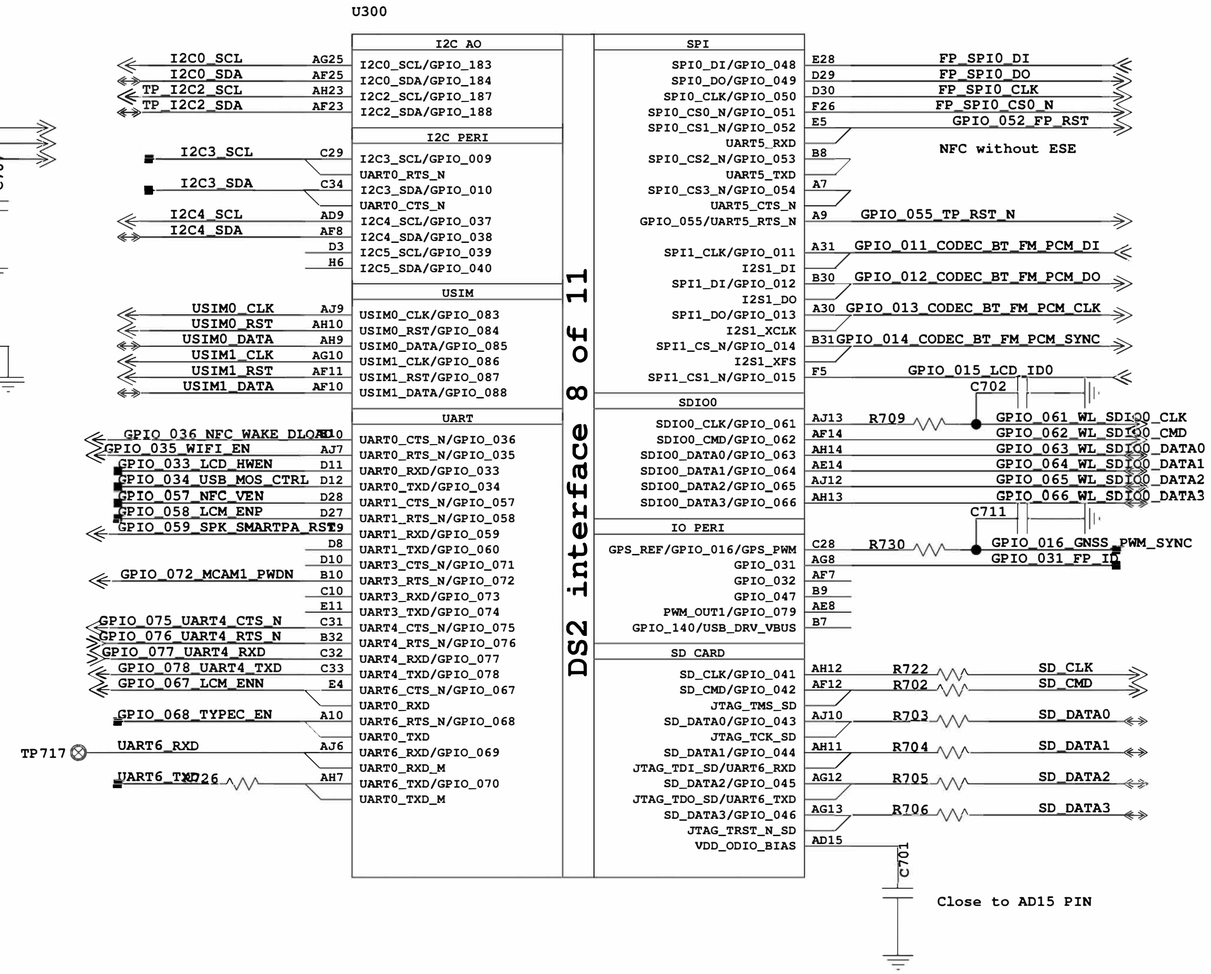

8. SOC RF

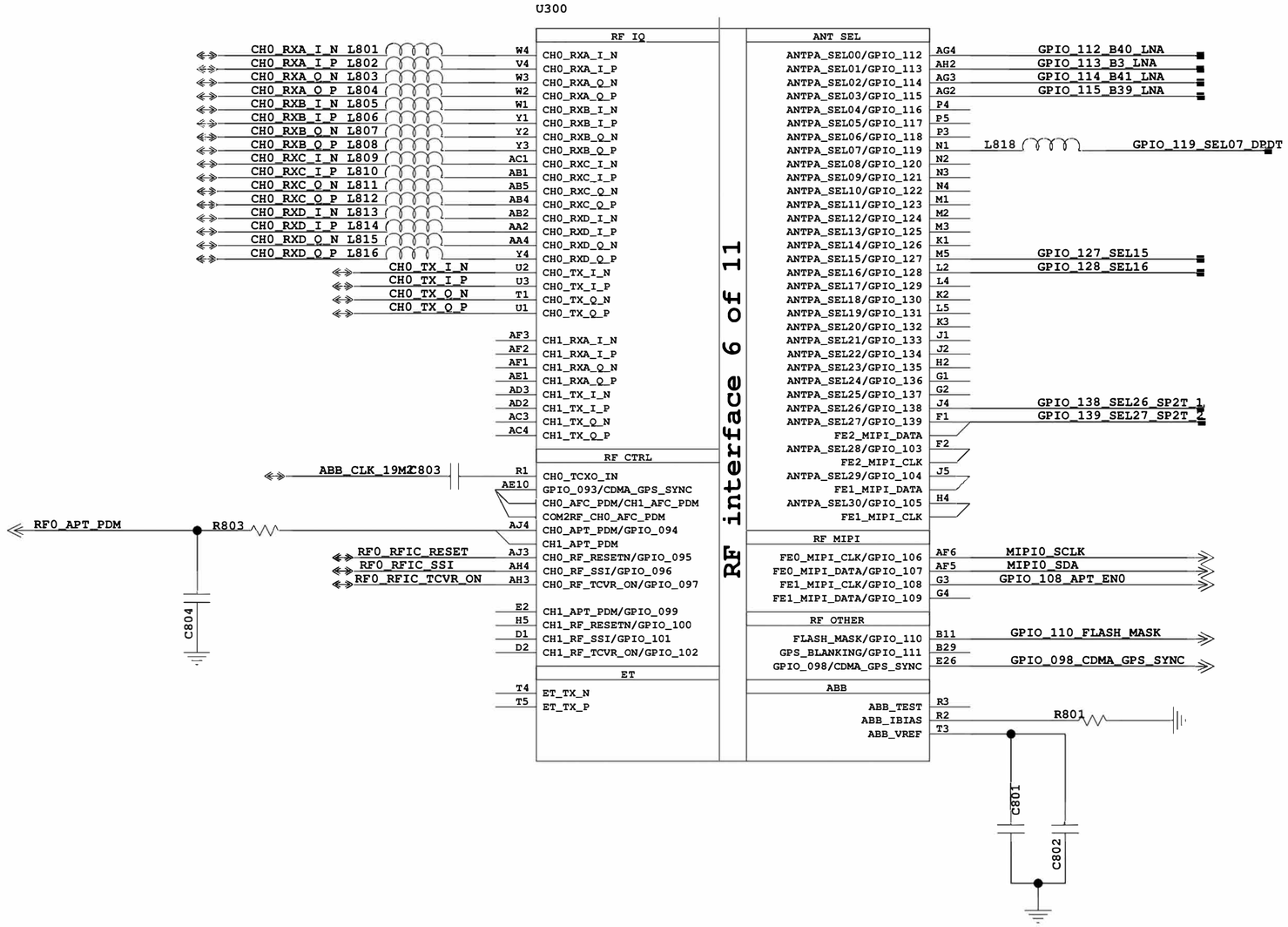
U300
RF interface 6 of 11
RF IQ
CH0_RXA_I_N L801 W4
CH0_RXA_I_P L802 V4
CH0_RXA_Q_N L803 W3
CH0_RXA_Q_P L804 W2
CH0_RXB_I_N L805 W1
CH0_RXB_I_P L806 Y1
CH0_RXB_Q_N L807 Y2
CH0_RXB_Q_P L808 Y3
CH0_RXC_I_N L809 AC1
CH0_RXC_I_P L810 AB1
CH0_RXC_Q_N L811 AB5
CH0_RXC_Q_P L812 AB4
CH0_RXD_I_N L813 AB2
CH0_RXD_I_P L814 AA2
CH0_RXD_Q_N L815 AA4
CH0_RXD_Q_P L816 Y4
CH0_TX_I_N U2
CH0_TX_I_P U3
CH0_TX_Q_N T1
CH0_TX_Q_P U1
AF3 CH1_RXA_I_N
AF2 CH1_RXA_I_P
AF1 CH1_RXA_Q_N
AE1 CH1_RXA_Q_P
AD3 CH1_TX_I_N
AD2 CH1_TX_I_P
AC3 CH1_TX_Q_N
AC4 CH1_TX_Q_P
RF CTRL
ABB_CLK_19M C803 R1 CH0_TCXO_IN
AE10 GPIO_093/CDMA_GPS_SYNC
CH0_AFC_PDM/CH1_AFC_PDM
COM2RF_CH0_AFC_PDM
RF0_APT_PDM R803 AJ4 CH0_APT_PDM/GPIO_094
CH1_APT_PDM
RF0_RFIC_RESET AJ3 CH0_RF_RESETN/GPIO_095
RF0_RFIC_SSI AH4 CH0_RF_SSI/GPIO_096
RF0_RFIC_TCVR_ON AH3 CH0_RF_TCVR_ON/GPIO_097
C804
E2 CH1_APT_PDM/GPIO_099
H5 CH1_RF_RESETN/GPIO_100
D1 CH1_RF_SSI/GPIO_101
D2 CH1_RF_TCVR_ON/GPIO_102
ET
T4 ET_TX_N
T5 ET_TX_P
ANT SEL
ANTPA_SEL00/GPIO_112 AG4 GPIO_112_B40_LNA
ANTPA_SEL01/GPIO_113 AH2 GPIO_113_B3_LNA
ANTPA_SEL02/GPIO_114 AG3 GPIO_114_B41_LNA
ANTPA_SEL03/GPIO_115 AG2 GPIO_115_B39_LNA
ANTPA_SEL04/GPIO_116 P4
ANTPA_SEL05/GPIO_117 P5
ANTPA_SEL06/GPIO_118 P3
ANTPA_SEL07/GPIO_119 N1 L818 GPIO_119_SEL07_DPDT
ANTPA_SEL08/GPIO_120 N2
ANTPA_SEL09/GPIO_121 N3
ANTPA_SEL10/GPIO_122 N4
ANTPA_SEL11/GPIO_123 M1
ANTPA_SEL12/GPIO_124 M2
ANTPA_SEL13/GPIO_125 M3
ANTPA_SEL14/GPIO_126 K1
ANTPA_SEL15/GPIO_127 M5 GPIO_127_SEL15
ANTPA_SEL16/GPIO_128 L2 GPIO_128_SEL16
ANTPA_SEL17/GPIO_129 L4
ANTPA_SEL18/GPIO_130 K2
ANTPA_SEL19/GPIO_131 L5
ANTPA_SEL20/GPIO_132 K3
ANTPA_SEL21/GPIO_133 J1
ANTPA_SEL22/GPIO_134 J2
ANTPA_SEL23/GPIO_135 H2
ANTPA_SEL24/GPIO_136 G1
ANTPA_SEL25/GPIO_137 G2
ANTPA_SEL26/GPIO_138 J4 GPIO_138_SEL26_SP2T_1
ANTPA_SEL27/GPIO_139 F1 GPIO_139_SEL27_SP2T_2
FE2_MIPI_DATA F2
ANTPA_SEL28/GPIO_103
FE2_MIPI_CLK J5
ANTPA_SEL29/GPIO_104
FE1_MIPI_DATA H4
ANTPA_SEL30/GPIO_105
FE1_MIPI_CLK
RF MIPI
FE0_MIPI_CLK/GPIO_106 AF6 MIPI0_SCLK
FE0_MIPI_DATA/GPIO_107 AF5 MIPI0_SDA
FE1_MIPI_CLK/GPIO_108 G3 GPIO_108_APT_EN0
FE1_MIPI_DATA/GPIO_109 G4
RF OTHER
FLASH_MASK/GPIO_110 B11 GPIO_110_FLASH_MASK
GPS_BLANKING/GPIO_111 B29
GPIO_098/CDMA_GPS_SYNC E26 GPIO_098_CDMA_GPS_SYNC
ABB
ABB_TEST R3
ABB_IBIAS R2 R801
ABB_VREF T3
C801
C802

9. SOC GND & NC

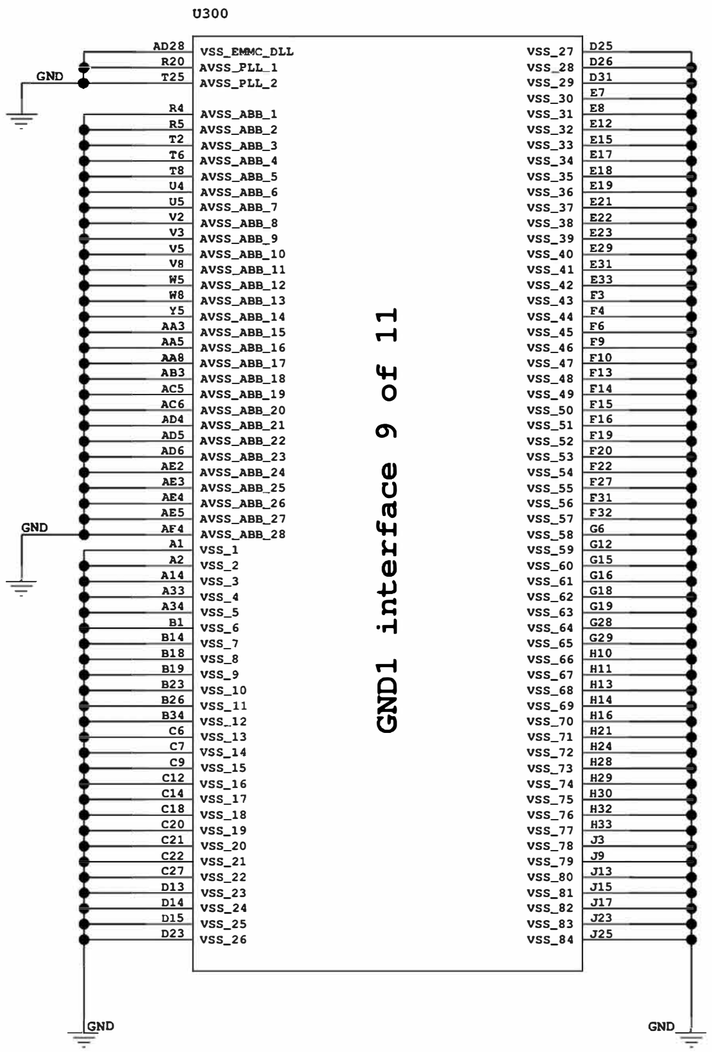
U300
GND1 interface 9 of 11
GND
AD28 VSS_EMMC_DLL
R20 AVSS_PLL_1
T25 AVSS_PLL_2
R4 AVSS_ABB_1
R5 AVSS_ABB_2
T2 AVSS_ABB_3
T6 AVSS_ABB_4
T8 AVSS_ABB_5
U4 AVSS_ABB_6
U5 AVSS_ABB_7
V2 AVSS_ABB_8
V3 AVSS_ABB_9
V5 AVSS_ABB_10
V8 AVSS_ABB_11
W5 AVSS_ABB_12
W8 AVSS_ABB_13
Y5 AVSS_ABB_14
AA3 AVSS_ABB_15
AA5 AVSS_ABB_16
AA8 AVSS_ABB_17
AB3 AVSS_ABB_18
AC5 AVSS_ABB_19
AC6 AVSS_ABB_20
AD4 AVSS_ABB_21
AD5 AVSS_ABB_22
AD6 AVSS_ABB_23
AE2 AVSS_ABB_24
AE3 AVSS_ABB_25
AE4 AVSS_ABB_26
AE5 AVSS_ABB_27
AF4 AVSS_ABB_28
A1 VSS_1
A2 VSS_2
A14 VSS_3
A33 VSS_4
A34 VSS_5
B1 VSS_6
B14 VSS_7
B18 VSS_8
B19 VSS_9
B23 VSS_10
B26 VSS_11
B34 VSS_12
C6 VSS_13
C7 VSS_14
C9 VSS_15
C12 VSS_16
C14 VSS_17
C18 VSS_18
C20 VSS_19
C21 VSS_20
C22 VSS_21
C27 VSS_22
D13 VSS_23
D14 VSS_24
D15 VSS_25
D23 VSS_26
VSS_27 D25
VSS_28 D26
VSS_29 D31
VSS_30 E7
VSS_31 E8
VSS_32 E12
VSS_33 E15
VSS_34 E17
VSS_35 E18
VSS_36 E19
VSS_37 E21
VSS_38 E22
VSS_39 E23
VSS_40 E29
VSS_41 E31
VSS_42 E33
VSS_43 F3
VSS_44 F4
VSS_45 F6
VSS_46 F9
VSS_47 F10
VSS_48 F13
VSS_49 F14
VSS_50 F15
VSS_51 F16
VSS_52 F19
VSS_53 F20
VSS_54 F22
VSS_55 F27
VSS_56 F31
VSS_57 F32
VSS_58 G6
VSS_59 G12
VSS_60 G15
VSS_61 G16
VSS_62 G18
VSS_63 G19
VSS_64 G28
VSS_65 G29
VSS_66 H10
VSS_67 H11
VSS_68 H13
VSS_69 H14
VSS_70 H16
VSS_71 H21
VSS_72 H24
VSS_73 H28
VSS_74 H29
VSS_75 H30
VSS_76 H32
VSS_77 H33
VSS_78 J3
VSS_79 J9
VSS_80 J13
VSS_81 J15
VSS_82 J17
VSS_83 J23
VSS_84 J25
GND
GND

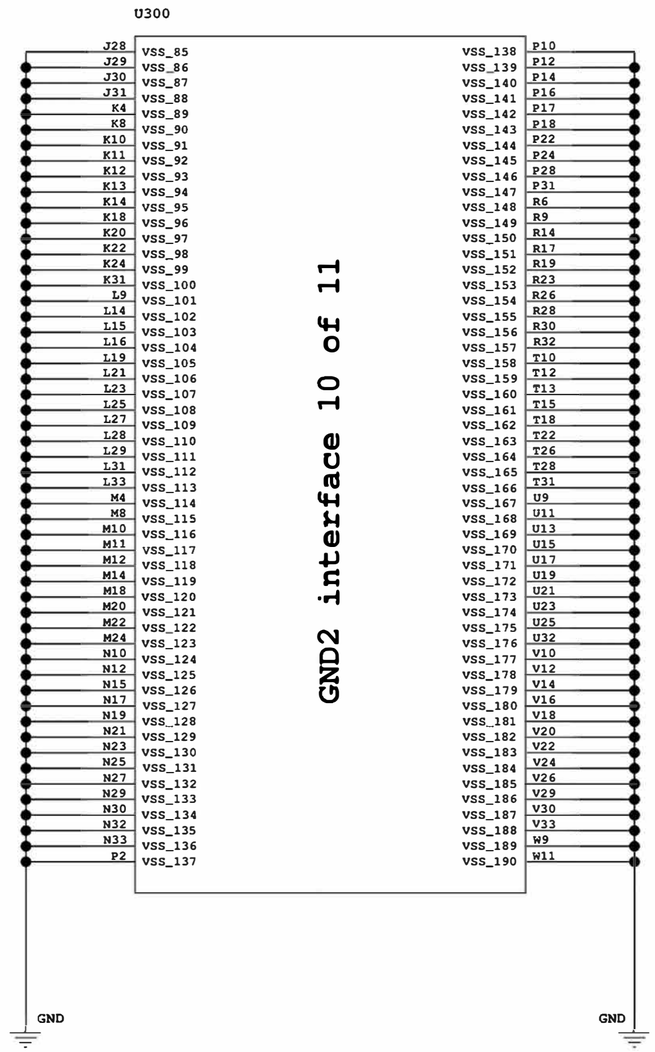
U300
GND2 interface 10 of 11
J28 VSS_85
J29 VSS_86
J30 VSS_87
J31 VSS_88
K4 VSS_89
K8 VSS_90
K10 VSS_91
K11 VSS_92
K12 VSS_93
K13 VSS_94
K14 VSS_95
K18 VSS_96
K20 VSS_97
K22 VSS_98
K24 VSS_99
K31 VSS_100
L9 VSS_101
L14 VSS_102
L15 VSS_103
L16 VSS_104
L19 VSS_105
L21 VSS_106
L23 VSS_107
L25 VSS_108
L27 VSS_109
L28 VSS_110
L29 VSS_111
L31 VSS_112
L33 VSS_113
M4 VSS_114
M8 VSS_115
M10 VSS_116
M11 VSS_117
M12 VSS_118
M14 VSS_119
M18 VSS_120
M20 VSS_121
M22 VSS_122
M24 VSS_123
N10 VSS_124
N12 VSS_125
N15 VSS_126
N17 VSS_127
N19 VSS_128
N21 VSS_129
N23 VSS_130
N25 VSS_131
N27 VSS_132
N29 VSS_133
N30 VSS_134
N32 VSS_135
N33 VSS_136
P2 VSS_137
VSS_138 P10
VSS_139 P12
VSS_140 P14
VSS_141 P16
VSS_142 P17
VSS_143 P18
VSS_144 P22
VSS_145 P24
VSS_146 P28
VSS_147 P31
VSS_148 R6
VSS_149 R9
VSS_150 R14
VSS_151 R17
VSS_152 R19
VSS_153 R23
VSS_154 R26
VSS_155 R28
VSS_156 R30
VSS_157 R32
VSS_158 T10
VSS_159 T12
VSS_160 T13
VSS_161 T15
VSS_162 T18
VSS_163 T22
VSS_164 T26
VSS_165 T28
VSS_166 T31
VSS_167 U9
VSS_168 U11
VSS_169 U13
VSS_170 U15
VSS_171 U17
VSS_172 U19
VSS_173 U21
VSS_174 U23
VSS_175 U25
VSS_176 U32
VSS_177 V10
VSS_178 V12
VSS_179 V14
VSS_180 V16
VSS_181 V18
VSS_182 V20
VSS_183 V22
VSS_184 V24
VSS_185 V26
VSS_186 V29
VSS_187 V30
VSS_188 V33
VSS_189 W9
VSS_190 W11
GND
GND

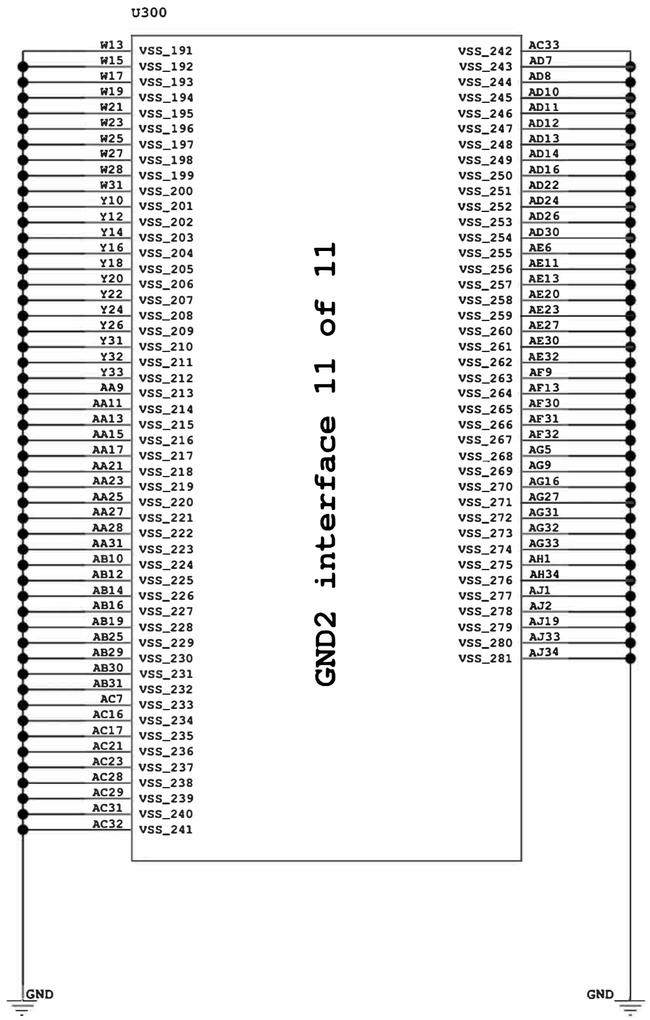
U300
GND2 interface 11 of 11
W13 VSS_191
W15 VSS_192
W17 VSS_193
W19 VSS_194
W21 VSS_195
W23 VSS_196
W25 VSS_197
W27 VSS_198
W28 VSS_199
W31 VSS_200
Y10 VSS_201
Y12 VSS_202
Y14 VSS_203
Y16 VSS_204
Y18 VSS_205
Y20 VSS_206
Y22 VSS_207
Y24 VSS_208
Y26 VSS_209
Y31 VSS_210
Y32 VSS_211
Y33 VSS_212
AA9 VSS_213
AA11 VSS_214
AA13 VSS_215
AA15 VSS_216
AA17 VSS_217
AA21 VSS_218
AA23 VSS_219
AA25 VSS_220
AA27 VSS_221
AA28 VSS_222
AA31 VSS_223
AB10 VSS_224
AB12 VSS_225
AB14 VSS_226
AB16 VSS_227
AB19 VSS_228
AB25 VSS_229
AB29 VSS_230
AB30 VSS_231
AB31 VSS_232
AC7 VSS_233
AC16 VSS_234
AC17 VSS_235
AC21 VSS_236
AC23 VSS_237
AC28 VSS_238
AC29 VSS_239
AC31 VSS_240
AC32 VSS_241
VSS_242 AC33
VSS_243 AD7
VSS_244 AD8
VSS_245 AD10
VSS_246 AD11
VSS_247 AD12
VSS_248 AD13
VSS_249 AD14
VSS_250 AD16
VSS_251 AD22
VSS_252 AD24
VSS_253 AD26
VSS_254 AD30
VSS_255 AE6
VSS_256 AE11
VSS_257 AE13
VSS_258 AE20
VSS_259 AE23
VSS_260 AE27
VSS_261 AE30
VSS_262 AE32
VSS_263 AF9
VSS_264 AF13
VSS_265 AF30
VSS_266 AF31
VSS_267 AF32
VSS_268 AG5
VSS_269 AG9
VSS_270 AG16
VSS_271 AG27
VSS_272 AG31
VSS_273 AG32
VSS_274 AG33
VSS_275 AH1
VSS_276 AH34
VSS_277 AJ1
VSS_278 AJ2
VSS_279 AJ19
VSS_280 AJ33
VSS_281 AJ34
GND
GND

10. PMU LDO

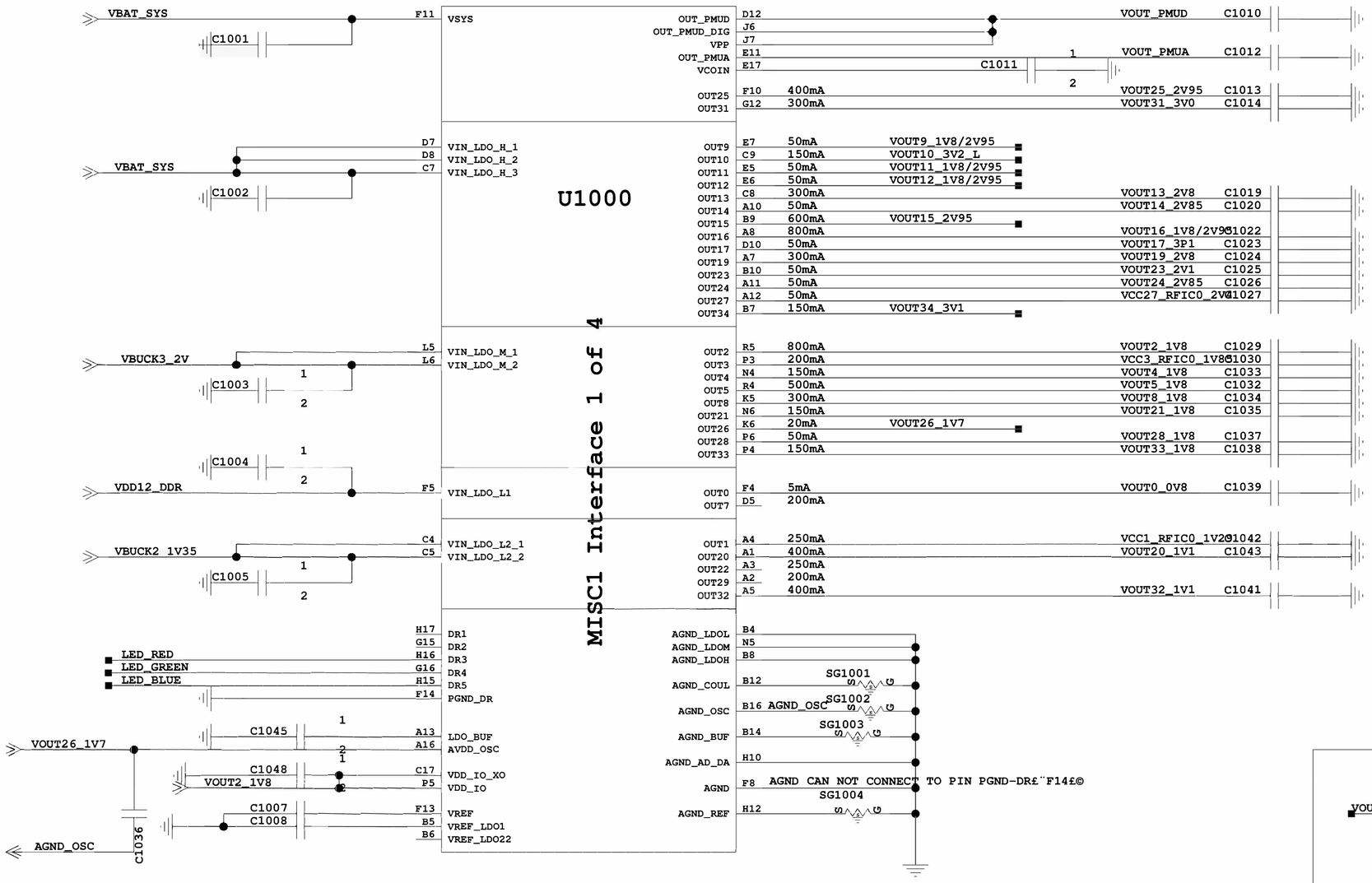

output	default	current	voltage	function
LDO1	OFF	250	1.29	SOC A0
LDO2	ON	800	1.8	pmu dig/RFIC/SOC1.8IO/64021.8
LDO3	OFF	200	1.85	RFIC0&1 AVDD2
LDO4	OFF	150	1.8	LCD1.8 IO/TP1.8 IO
LDO5	ON	500	1.8	CSI/DSI/AVDD/PLL_HV/USB 1.8
LDO7	ON	200	0.9	AVDDH_ABB
LDO8	ON	300	1.8	SOCpll 6402analog classd
LDO9	OFF	50	1.8/2.95	SD IO
LDO10	ON	150	3.2	USB_3.0
LDO11	OFF	50	1.8	SIM0
LDO12	OFF	50	1.8	SIM1
LDO13	OFF	300	2.85	S camera analog
LDO14	OTP	50	2.85	RF FEM
LDO15	ON	600	2.95	EMMC VDD
LDO16	OFF	800	2.95	SD card
LDO17	OFF	50	2.8	LCD TP
LDO19	OFF	300	2.8	M camera anlog
LDO20	OFF	400	1.2	M Camera Core
LDO21	OFF	150	1.8	svs_efuse
LDO22	OFF	250	1.29	RFIC1 AVDD1 1.29v
LDO23	ON	50	2.1	HKADC
LDO24	ON	50	2.85	X Sensor AVDD
LDO25	OFF	400	2.85	Camera VCM
LDO26	ON	50	1.7	19.2_AVDD
LDO27	ON	50	2.4	RF_6362
LDO28	OFF	50	1.8	RF MIPI I/O
LDO29	ON	200	1.2	Hi6402 1.2V
LDO30				
LDO31	OFF	300	2.8	Vibrator
LDO32	OFF	400	1.2	S Camera Core
LDO33	OFF	150	1.8	M/S Camera I/O
LDO34	ON	150	3.2	codec 3.2V

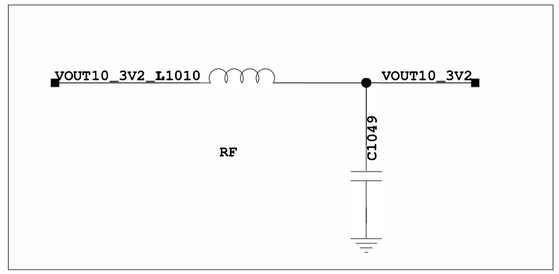

11. PMU BUCK&CODEC

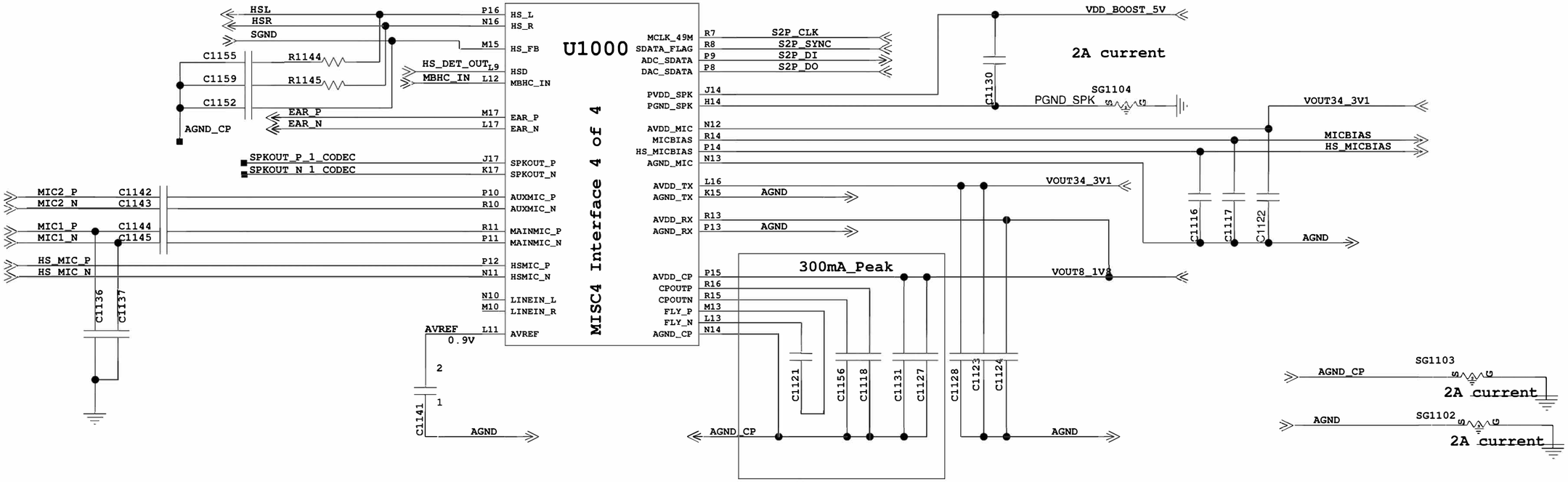

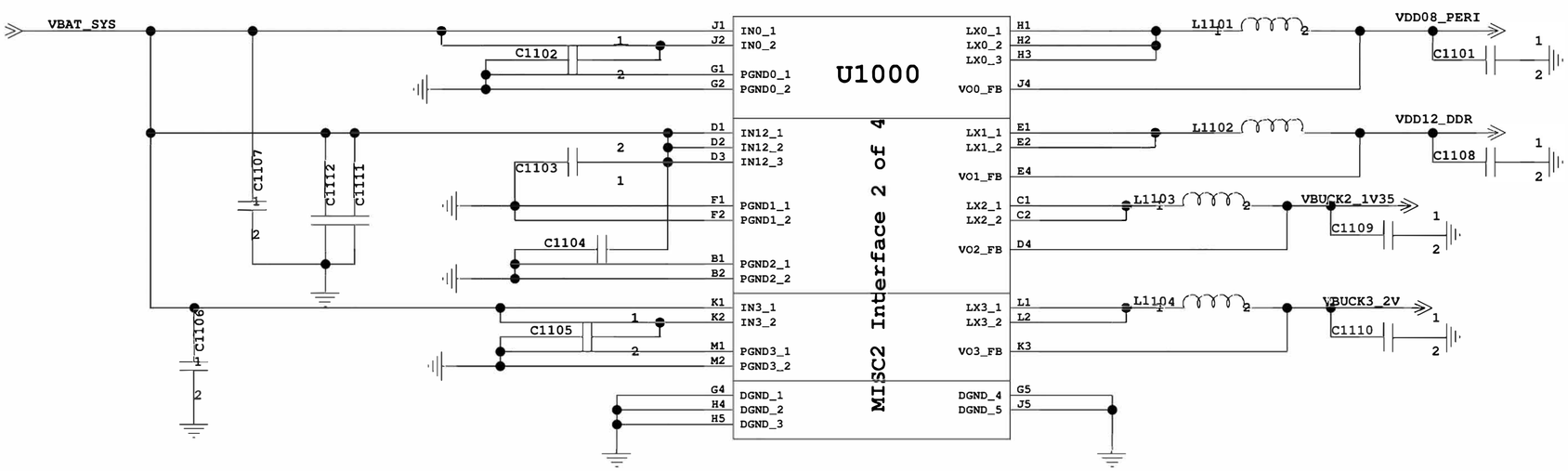

BUCK0	ON	3000	0.8	DDR Core/CSI/DSI Phy emmc
BUCK1	ON	2000	1.1	VDDQ/VDDCA/VDD2/ODTLDO2
BUCK2	ON	2000	1.35	1.35 buck
BUCK3	ON	2000	2.0	2.0 buck

12. PMU MISC

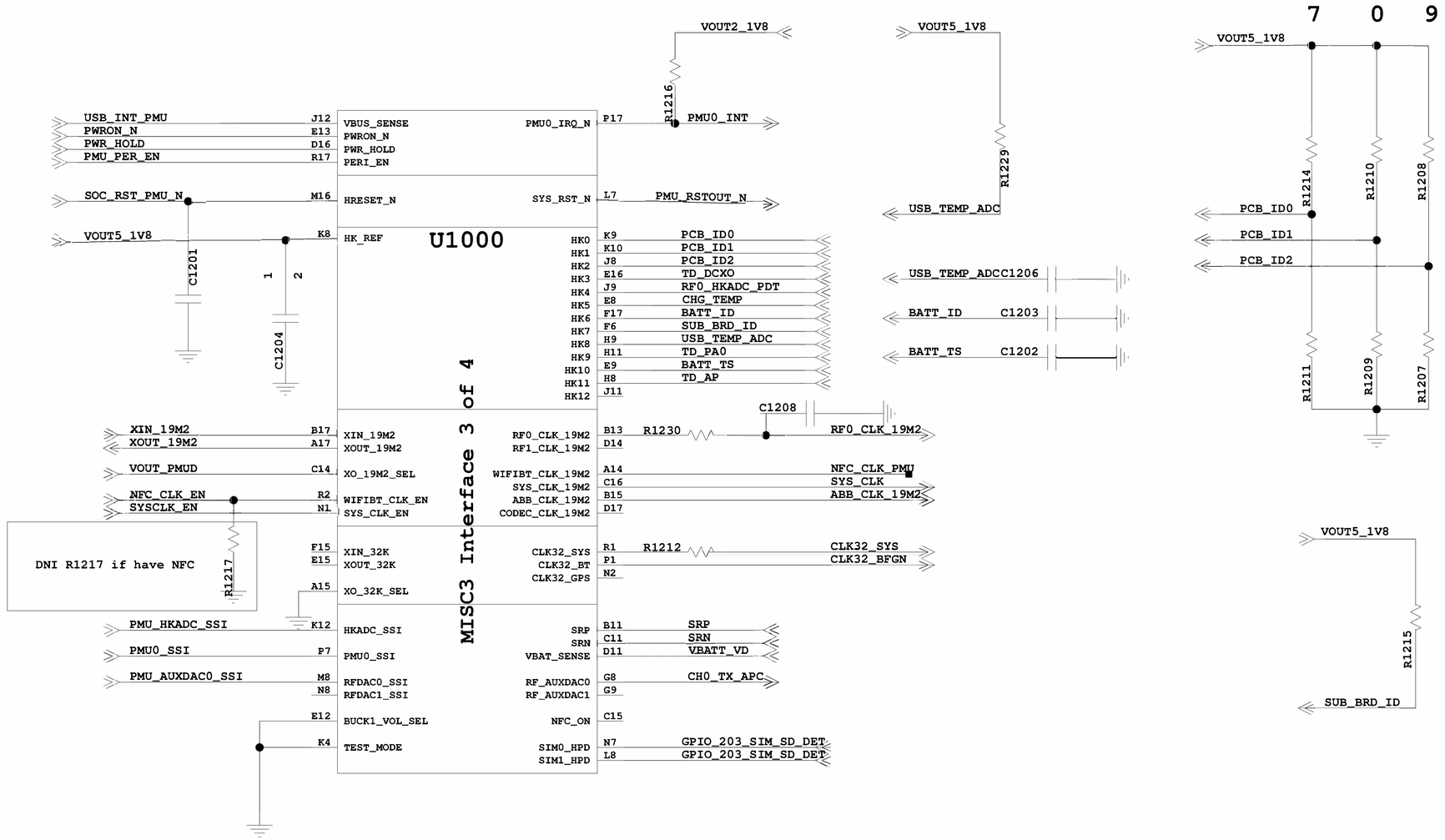

ANNE MainBoard ID

	AL00	TL00	L02/L22	L01/L21	L22J	L03/L23
Board ID	4904	4910	4907	4905	4906	4908

Board ID Resistor Set

ID	UP RES	DOWN RES
0	NC	0K
1	150K	22K
2	100K	30K
3	200K	100K
4	150K	121K
5	121K	150K
6	51K	100K
7	30K	100K
8	20K	150K
9	150K	NC

Resistor Code

0K	07090911
20K	07092448
22K	07091172
30K	07091299
51K	07091302
100K	07091246
121K	07091176
150K	07092138
200K	07091406

ANNE LittleBorad ID

	AL00	TL00	L02/L22	L01/L21	L22J	L03/L23
R1215	200K	200K	200K	150K	100K	51K

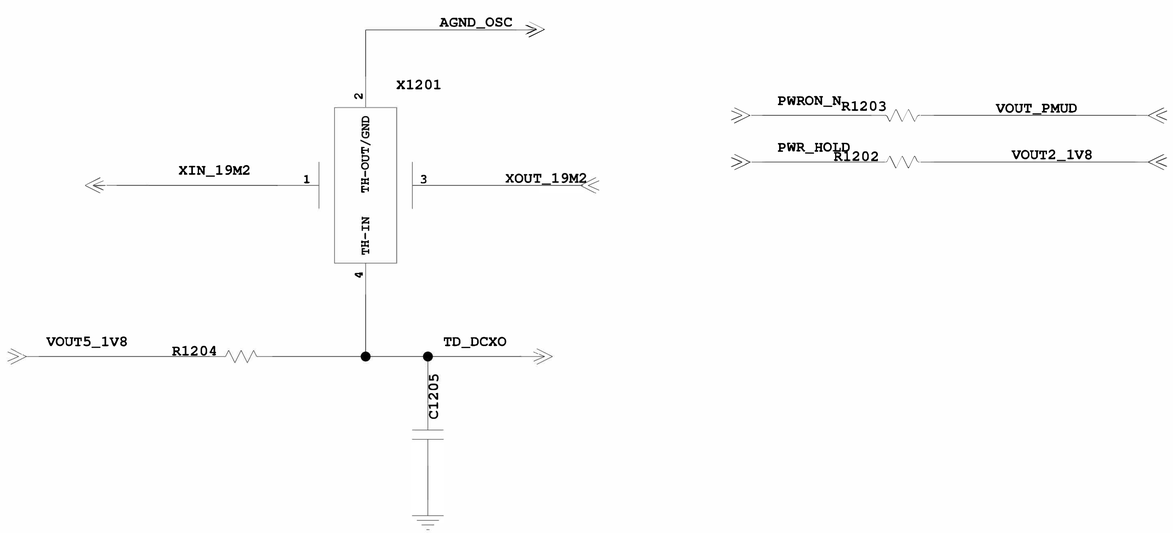

13. HI6422

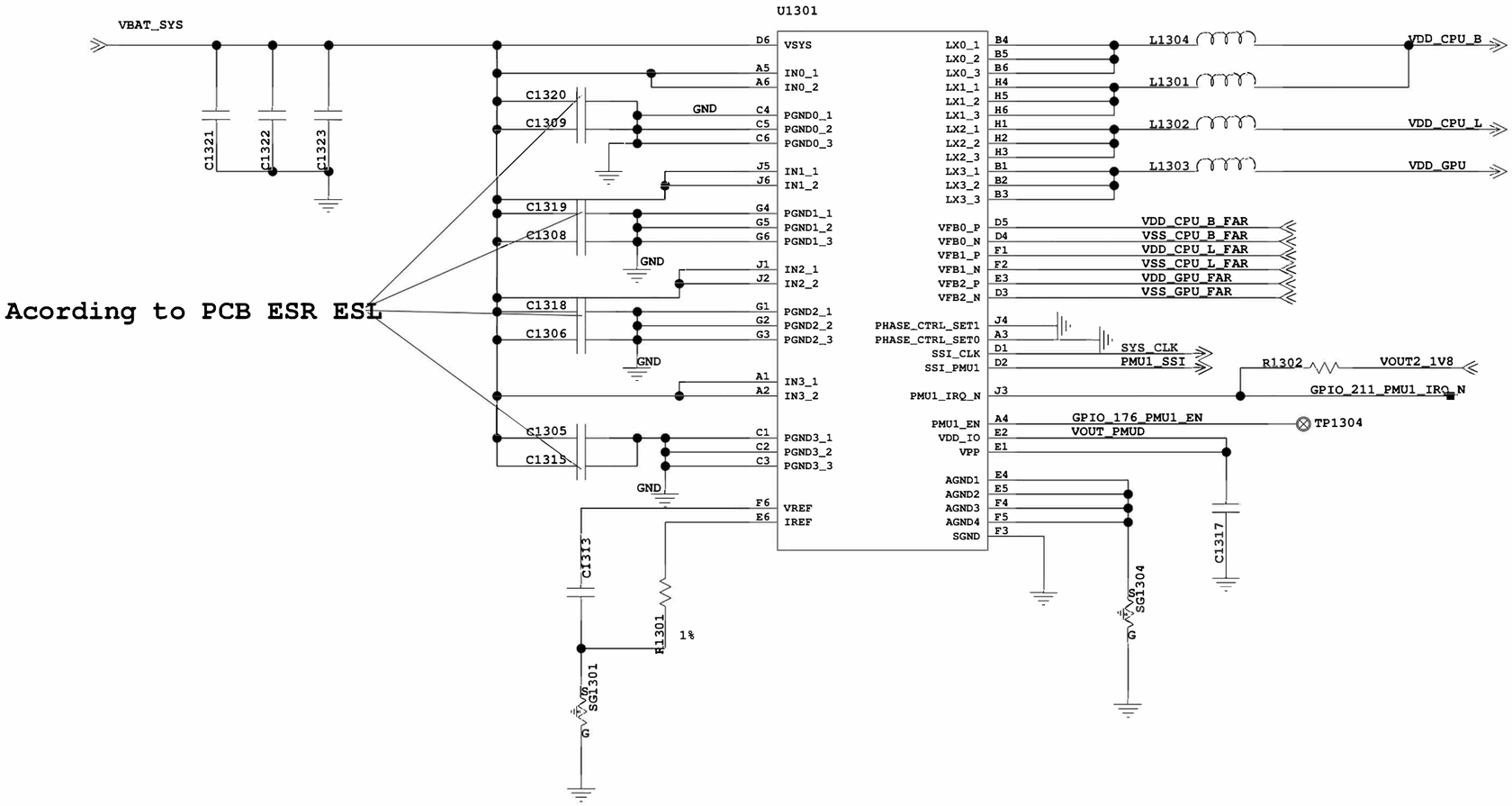
U1301
VBAT_SYS
C1321
C1322
C1323
Acording to PCB ESR ESL
C1320
C1309
C1319
C1308
C1318
C1306
C1305
C1315
GND
D6 VSYS
A5 IN0_1
A6 IN0_2
C4 PGND0_1
C5 PGND0_2
C6 PGND0_3
J5 IN1_1
J6 IN1_2
G4 PGND1_1
G5 PGND1_2
G6 PGND1_3
J1 IN2_1
J2 IN2_2
G1 PGND2_1
G2 PGND2_2
G3 PGND2_3
A1 IN3_1
A2 IN3_2
C1 PGND3_1
C2 PGND3_2
C3 PGND3_3
F6 VREF
E6 IREF
LX0_1 B4
LX0_2 B5
LX0_3 B6
LX1_1 H4
LX1_2 H5
LX1_3 H6
LX2_1 H1
LX2_2 H2
LX2_3 H3
LX3_1 B1
LX3_2 B2
LX3_3 B3
L1304
L1301
L1302
L1303
VDD_CPU_B
VDD_CPU_L
VDD_GPU
VFB0_P D5 VDD_CPU_B_FAR
VFB0_N D4 VSS_CPU_B_FAR
VFB1_P F1 VDD_CPU_L_FAR
VFB1_N F2 VSS_CPU_L_FAR
VFB2_P E3 VDD_GPU_FAR
VFB2_N D3 VSS_GPU_FAR
PHASE_CTRL_SET1 J4
PHASE_CTRL_SET0 A3
SSI_CLK D1 SYS_CLK
SSI_PMU1 D2 PMU1_SSI
R1302
VOUT2_1V8
PMU1_IRQ_N J3
GPIO_211_PMU1_IRQ_N
PMU1_EN A4 GPIO_176_PMU1_EN
VDD_IO E2 VOUT_PMUD
VPP E1
TP1304
AGND1 E4
AGND2 E5
AGND3 F4
AGND4 F5
SGND F3
C1313
R1301
1%
SG1301
SG1304
C1317

14. eMMC and LPDDR3

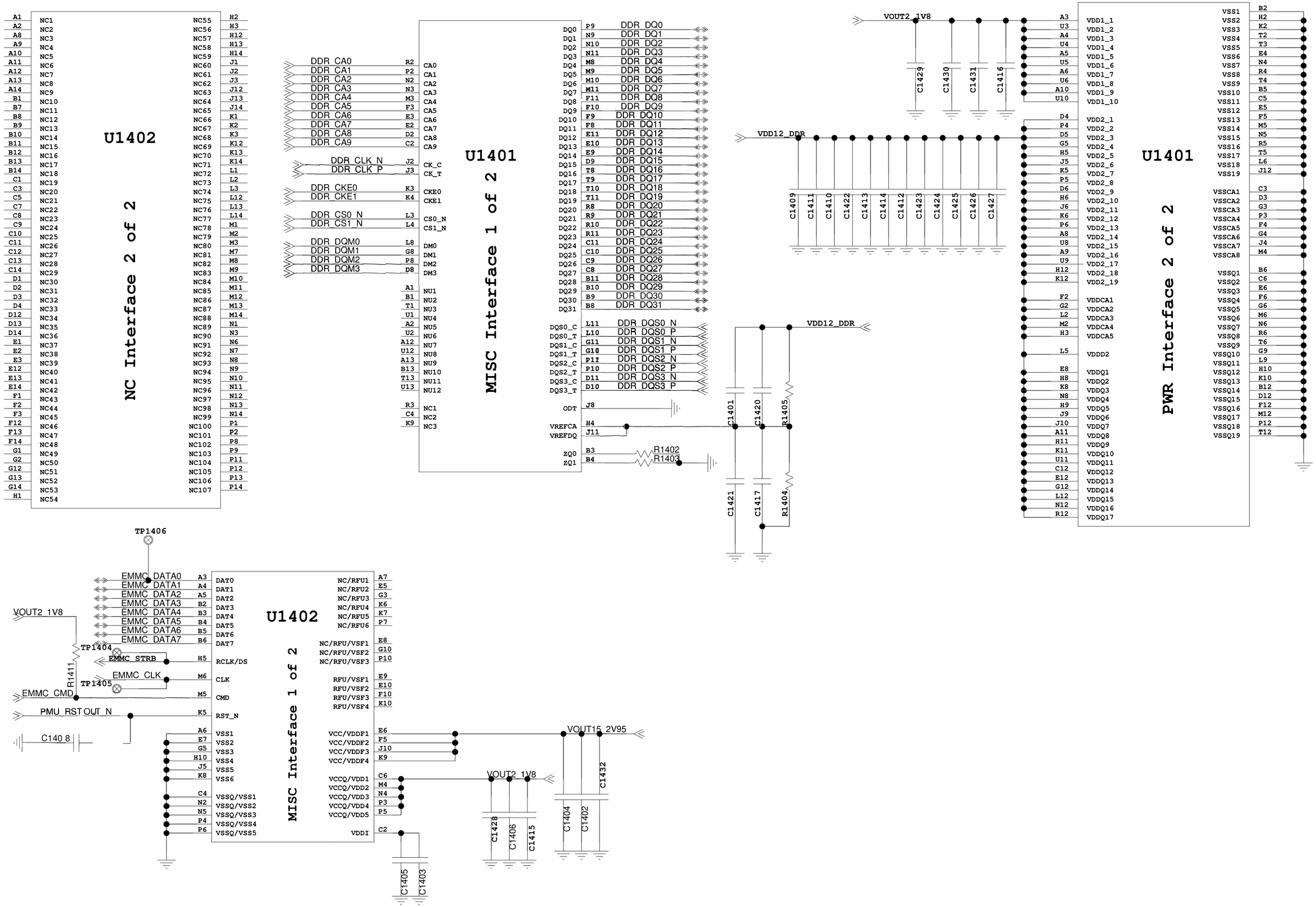

15. Battery & Fuel guage

Battery Connector

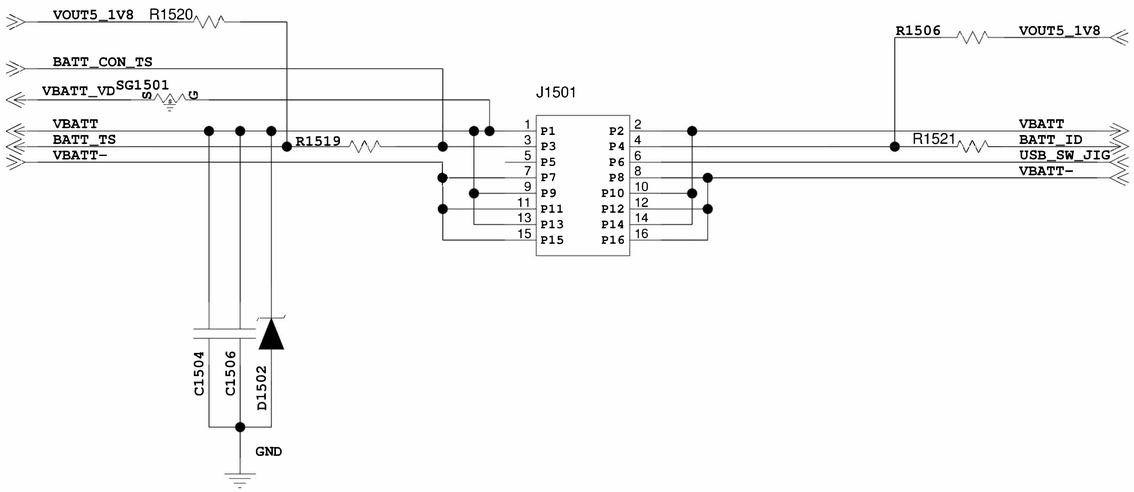

CAD note:1.Trace for 6A
2.Differential trace

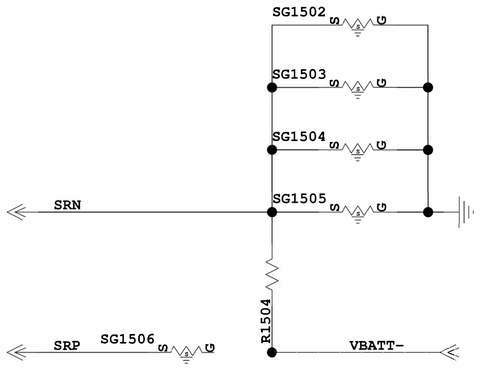

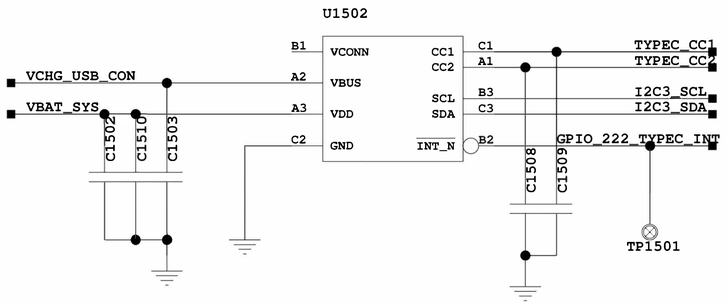

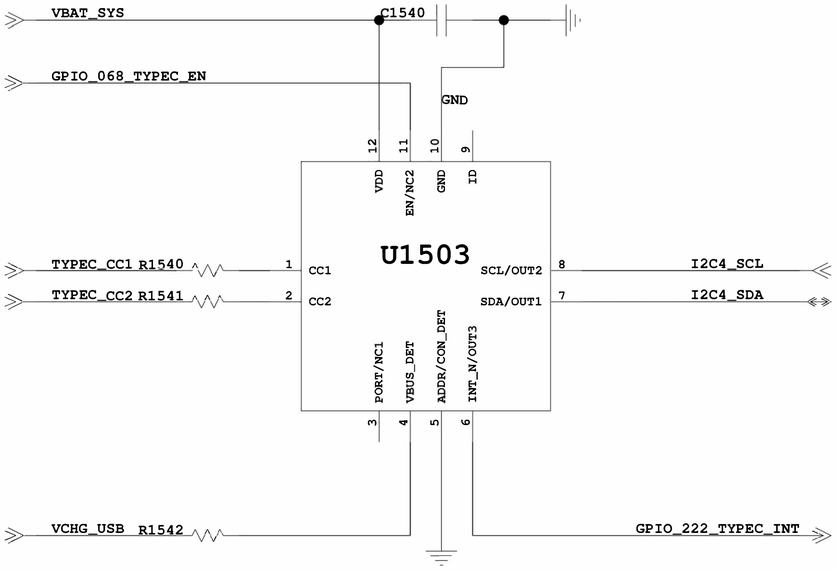

USB/UART SWITCH

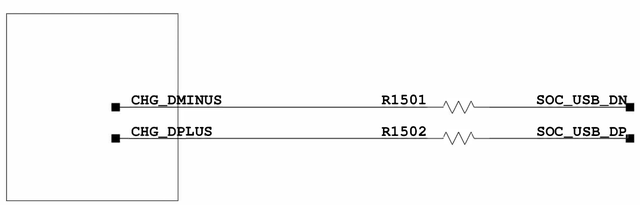

16. Charge Management

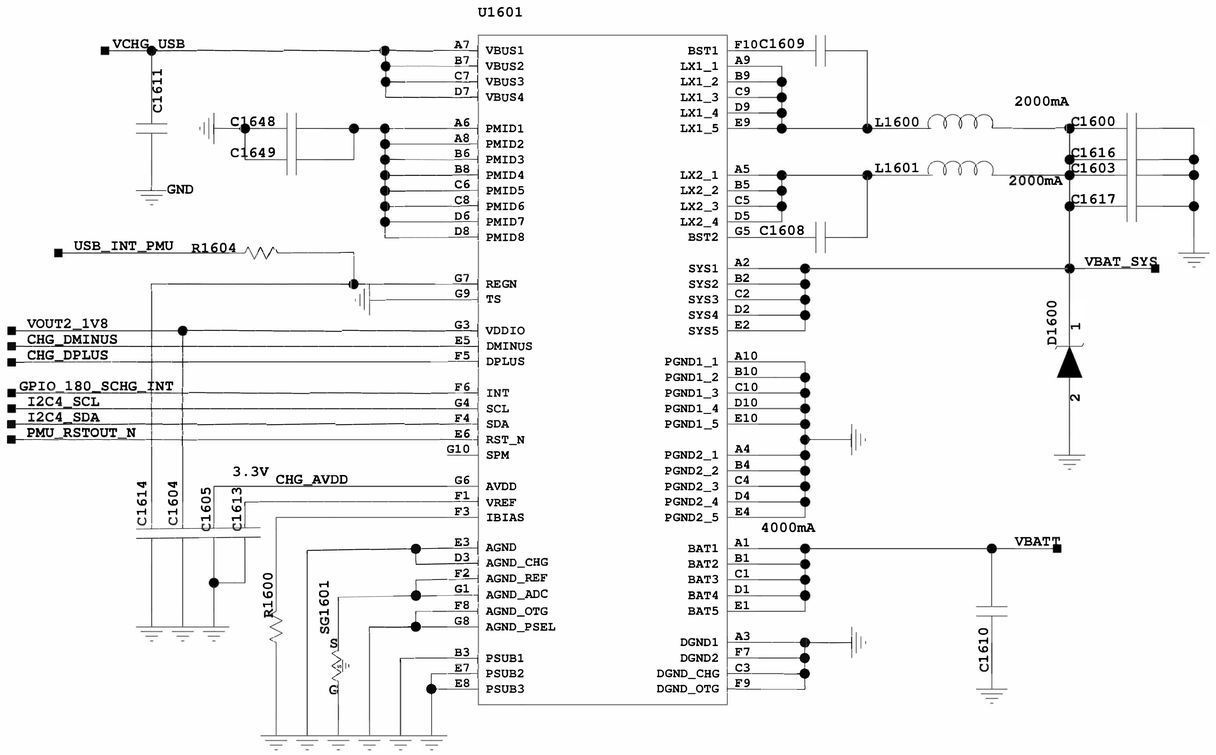

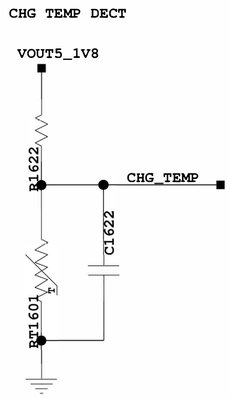

17. LCD Interface

LCD POS/NEG Voltage Driver

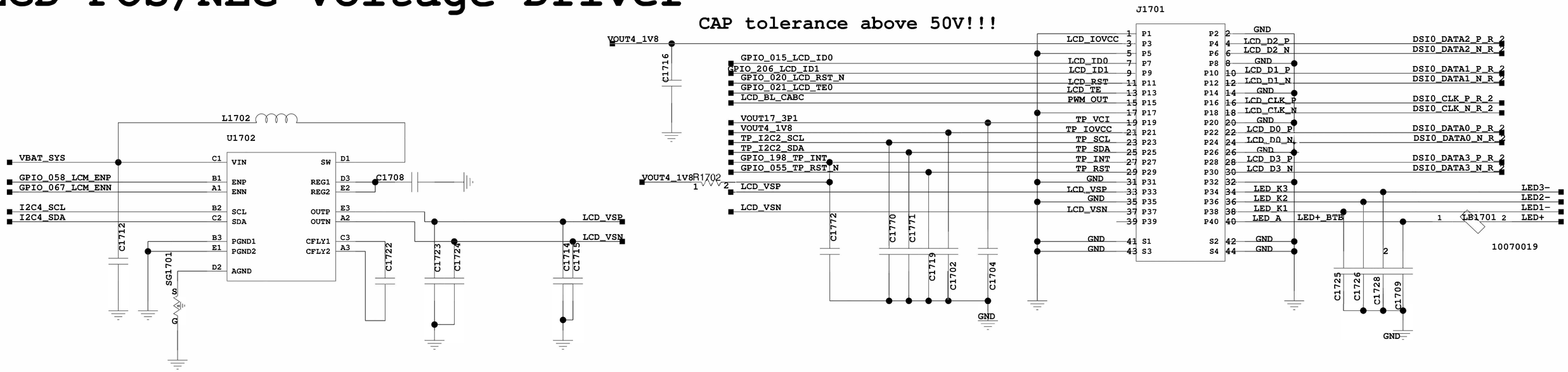

LCD BL DRIVER

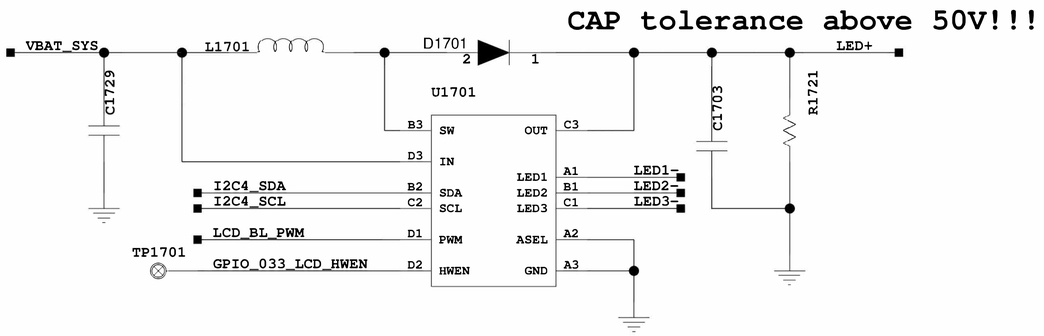

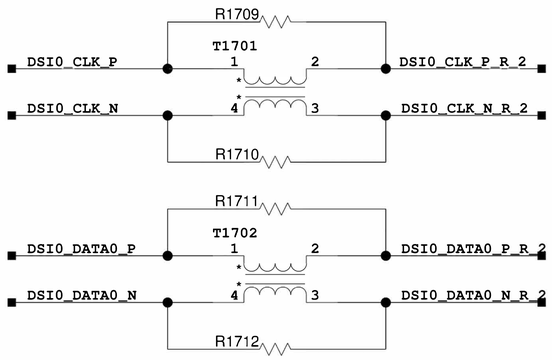

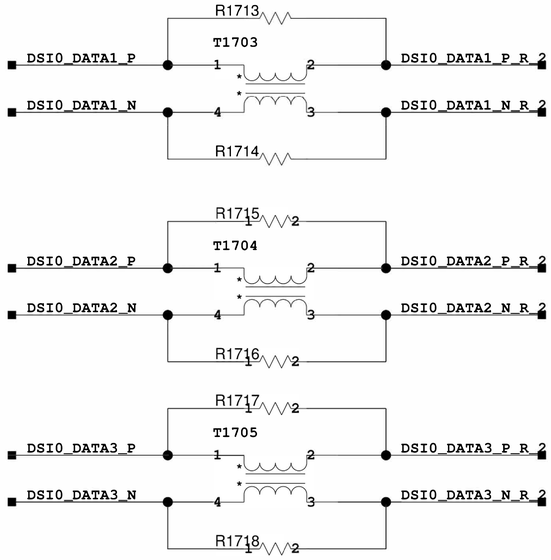

19. Flash LED/camera mipi switch

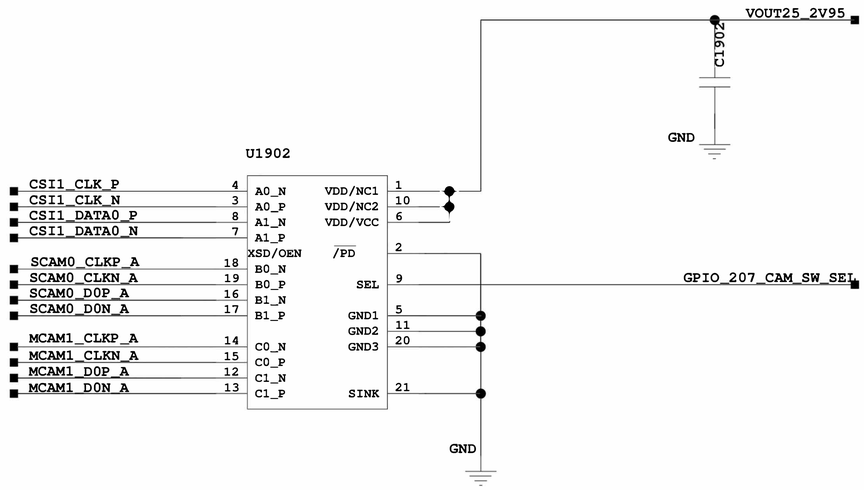

Flash Light

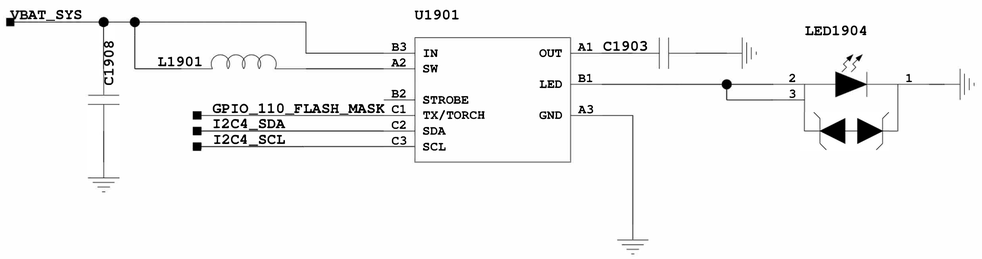

20. Dual Camera

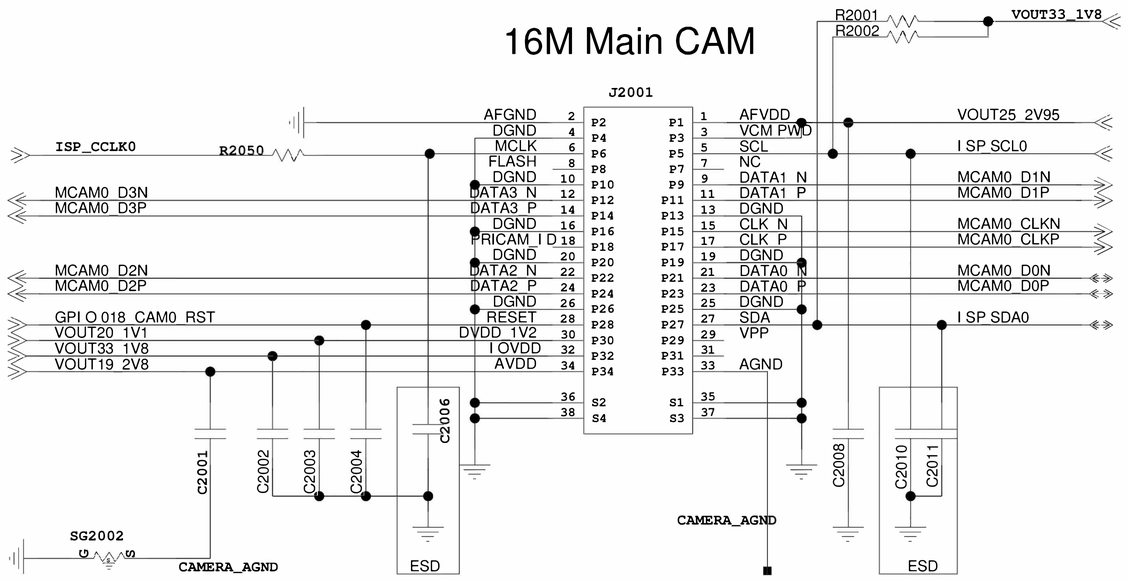

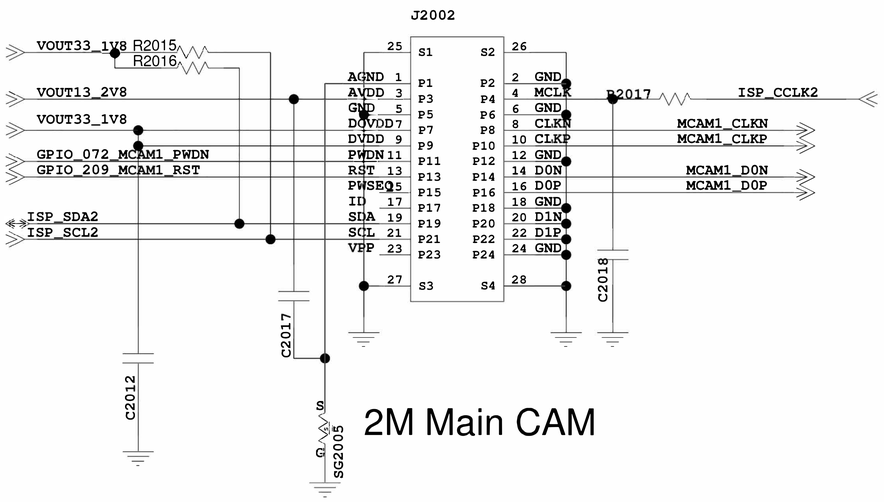

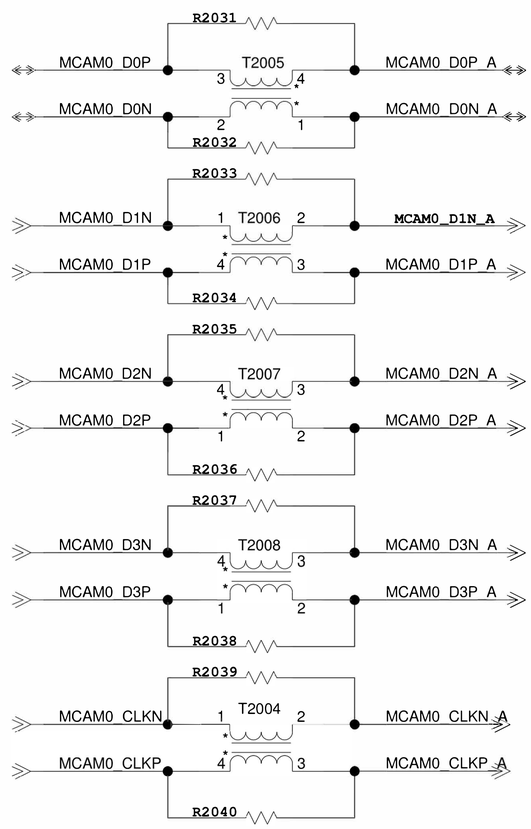

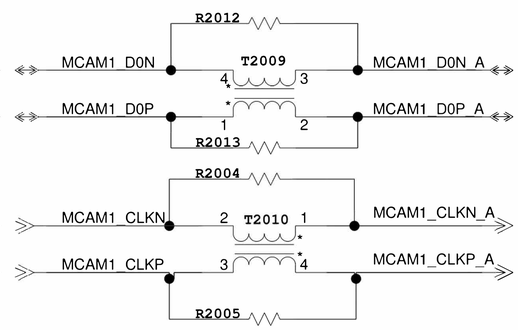

21. Front Camera

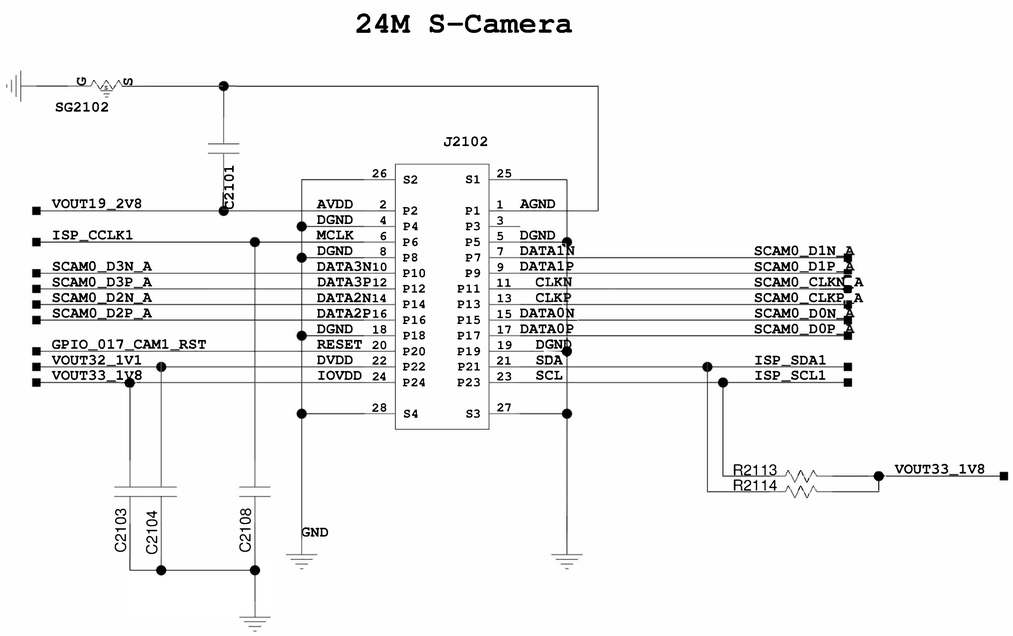

22. CODEC HI6402

BootMode0	BootMode1	Function(BootROM Start)
1	1	SPI Start
1	0	SSI Start
0	1	I2C Start
0	0	SLIMBUS Start

23. MIC/RCV/FM

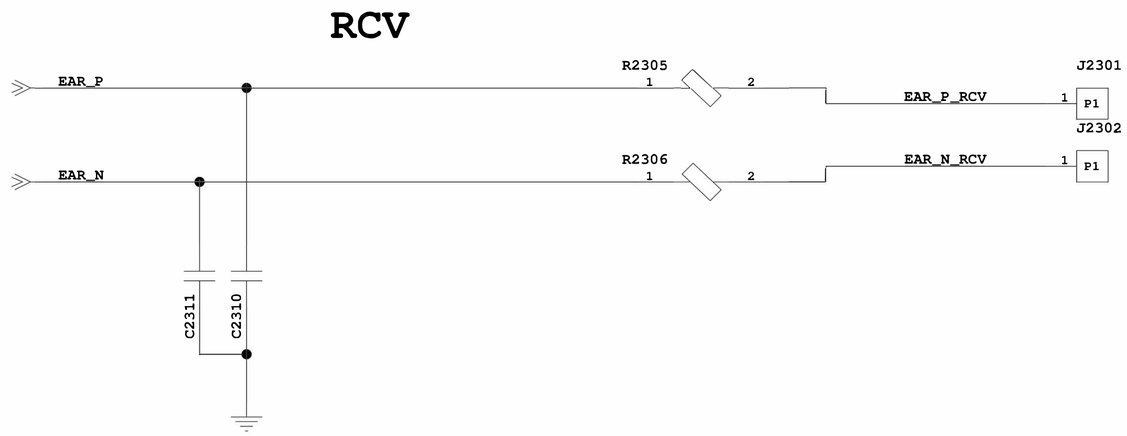

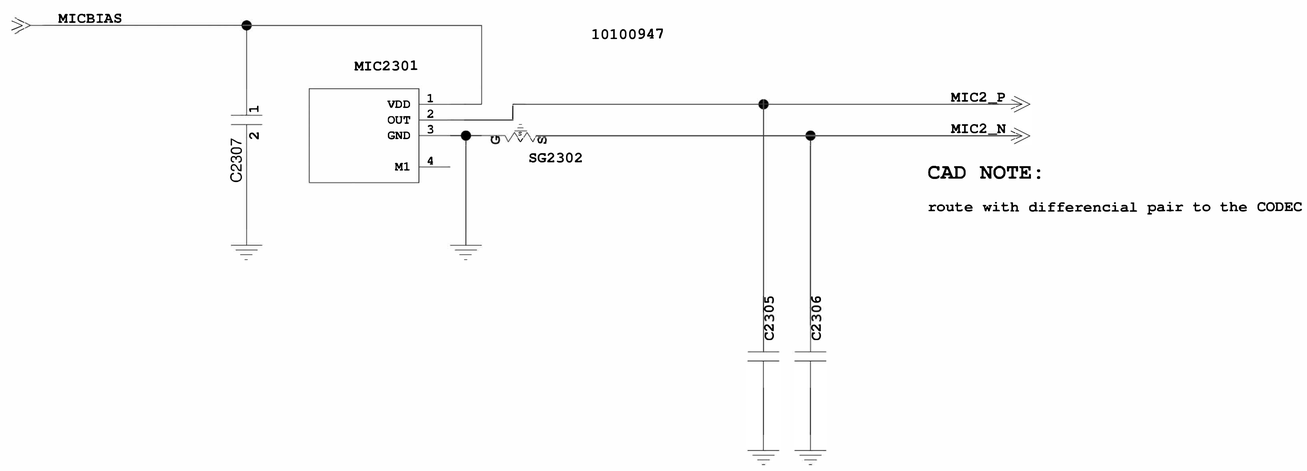

CAD NOTE:

route with differencial pair to the CODEC

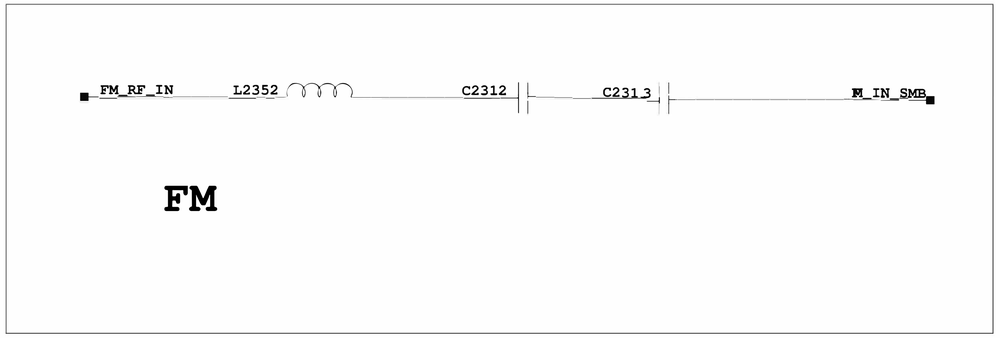

24. Headphone

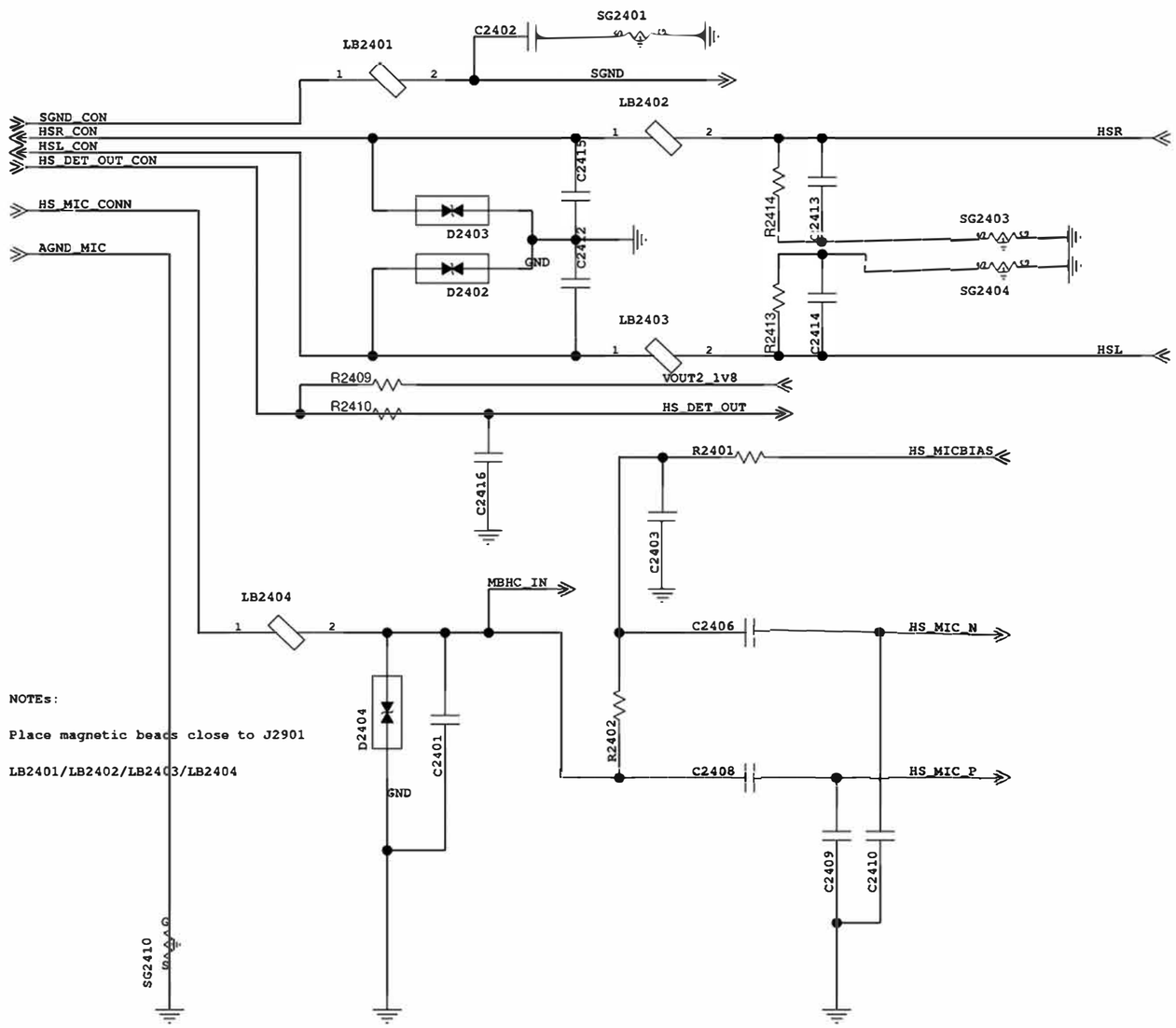

25. Audio Smart PA

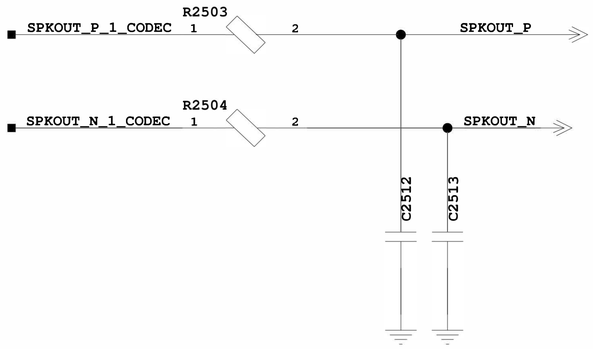

26. X-Sensor

Accelerometer

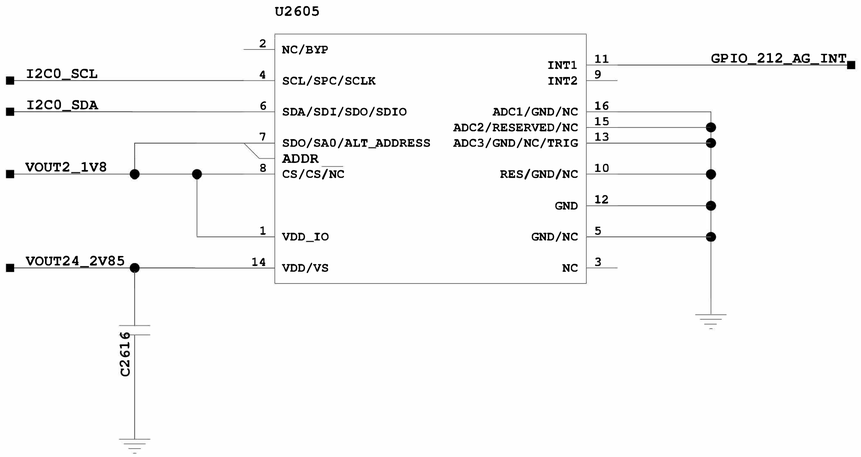

Ambient Light & Status indicator

LED Pulse Current :max 125mA

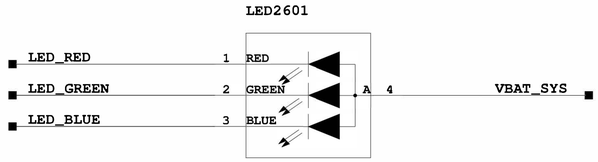

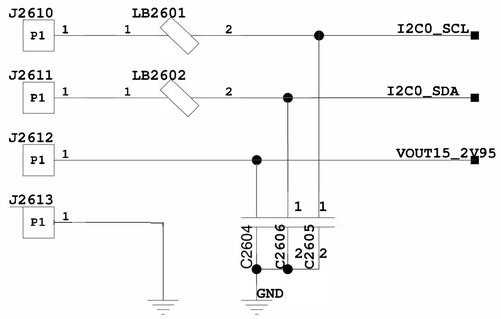

Compass (place together,co-layout)

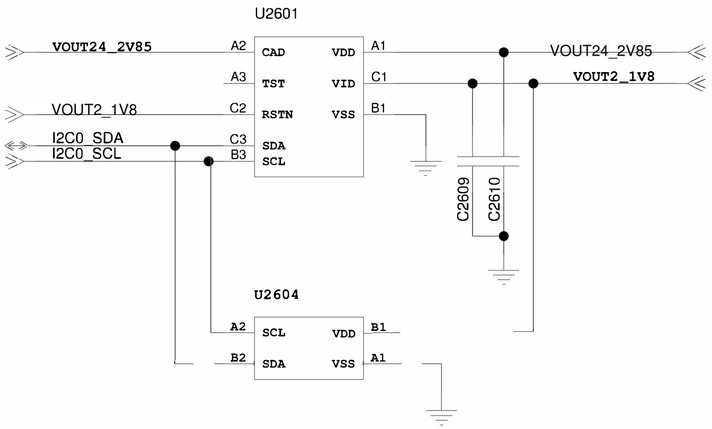

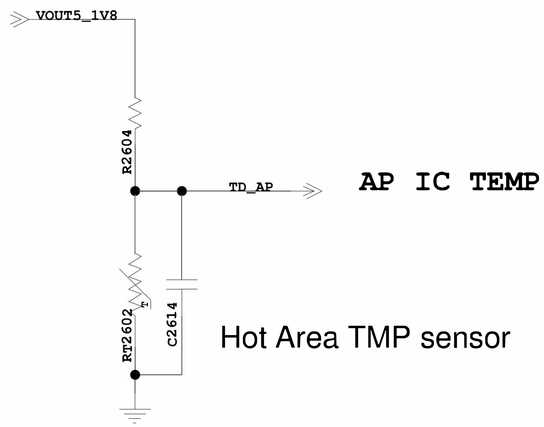

27. NXP NFC

BOM note:		R2703	D2801	27sheet NFC
NFC	Y	DNI	DNI	follow_design
	N	SMT	DNI	All DNI except R2703

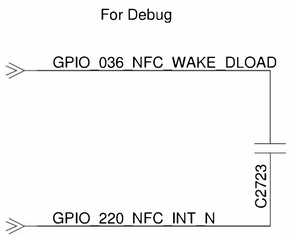

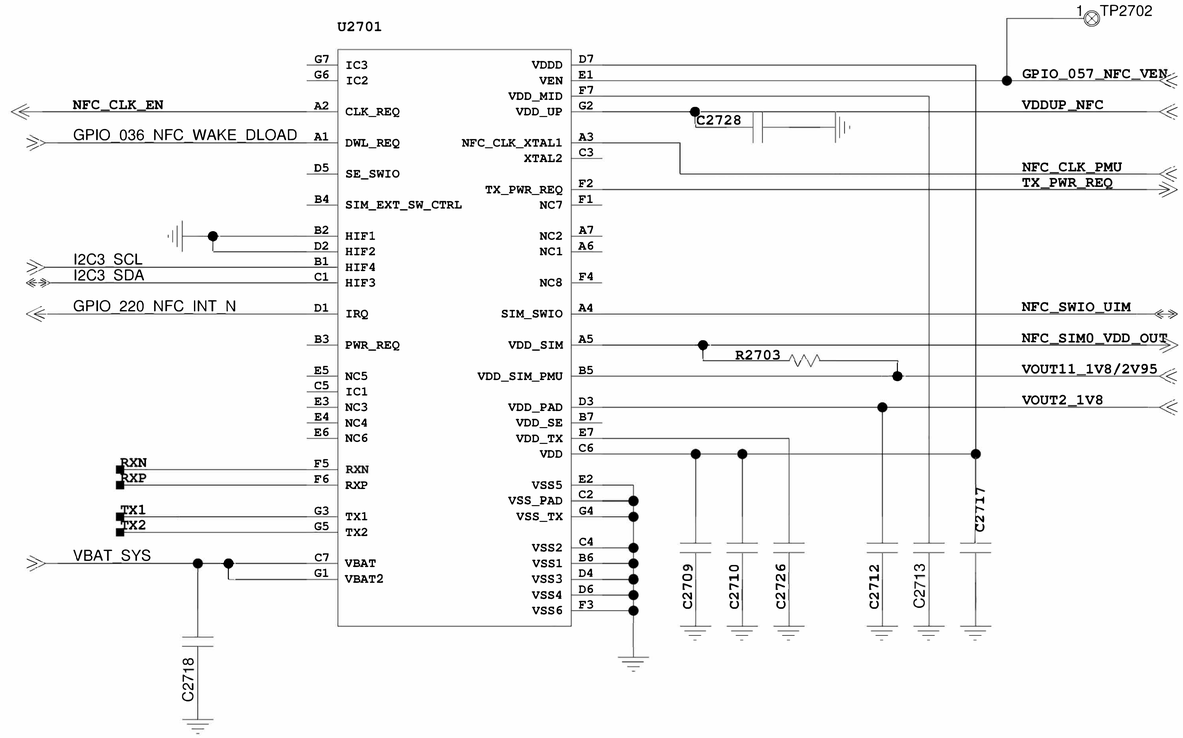

When NFC used need to SMT R2701/D2701

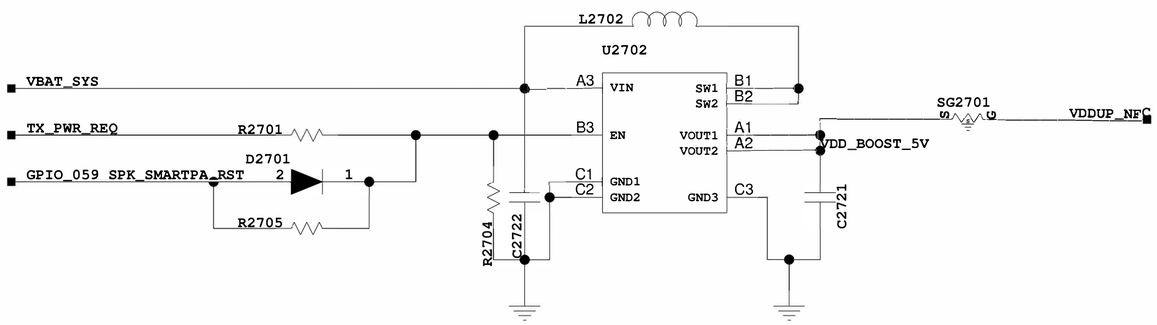

28.SIM/uSD Card

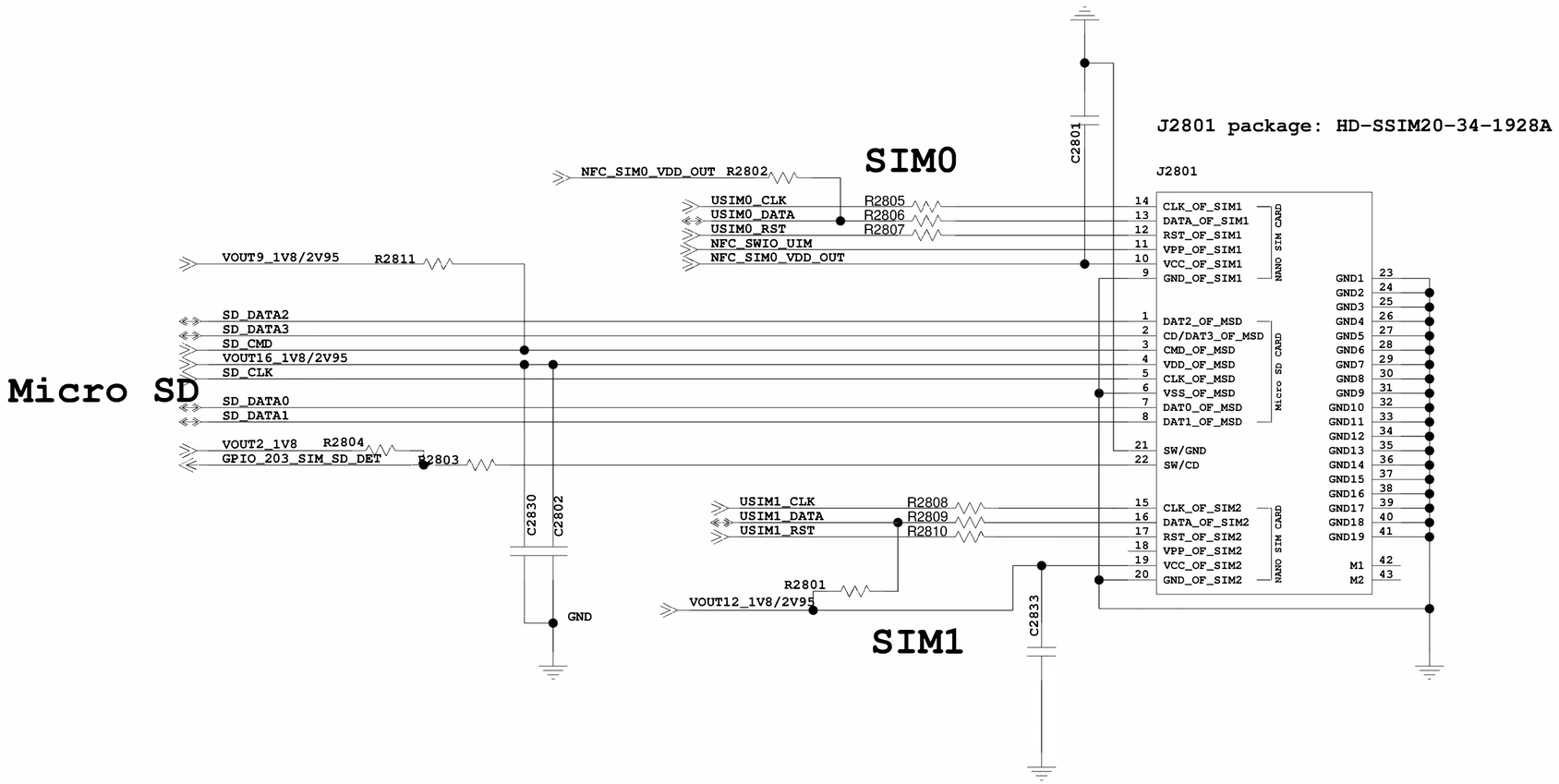

29.FPC Interface

For Protect£¬should closed to J2901

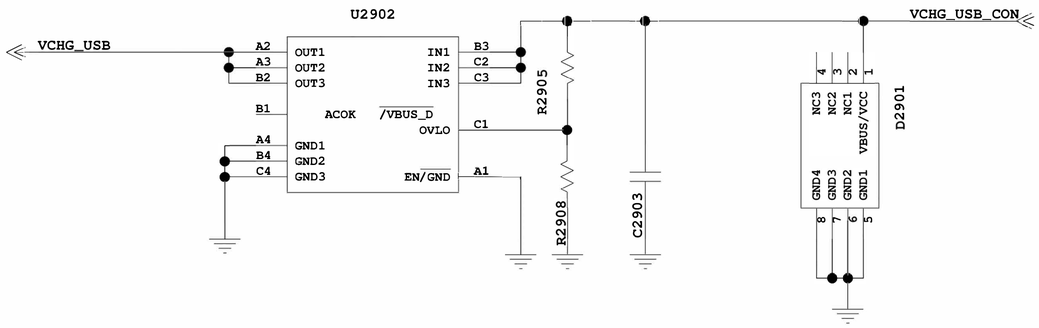

Must close Q2901 to J2901

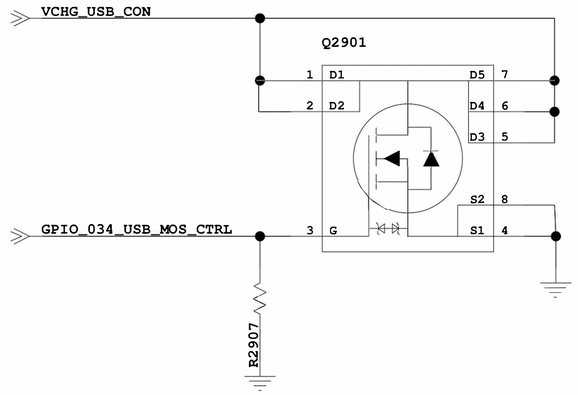

FP BTB

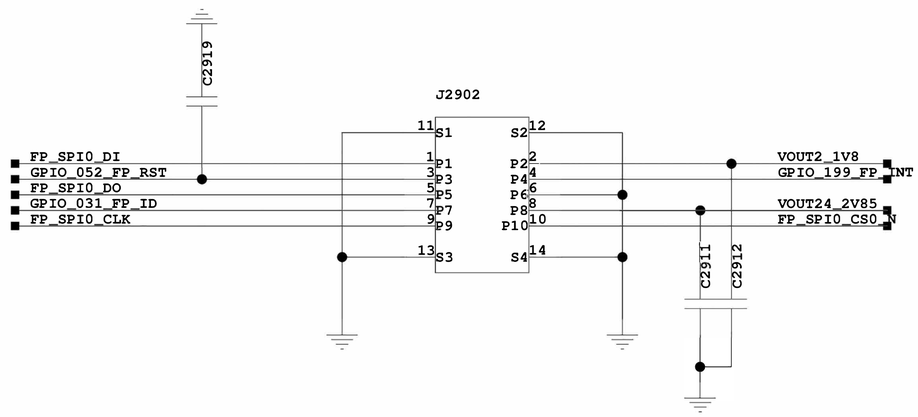

Main FPC BTB

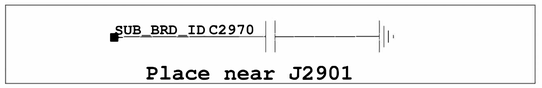

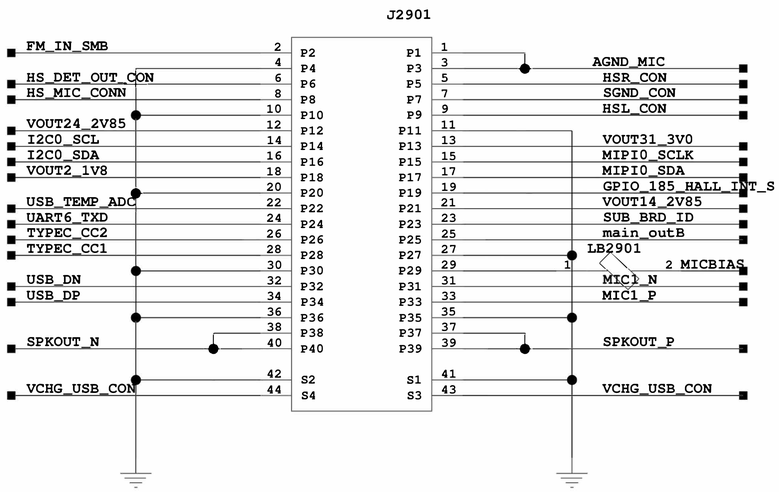

KEY BTB

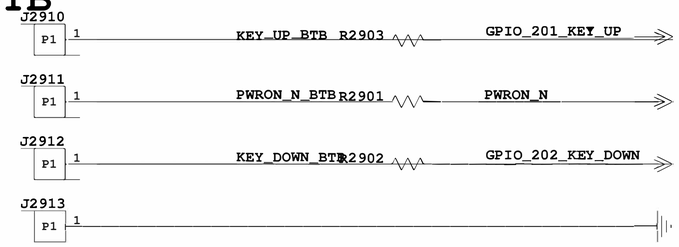

30. Test Points/Shields

CT BT PT

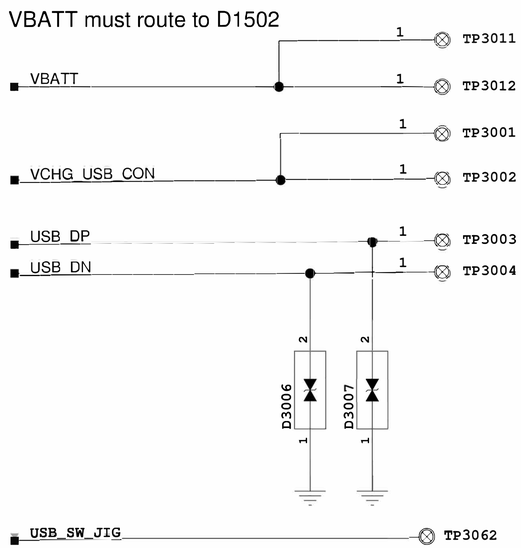

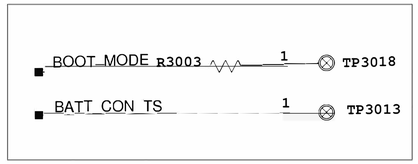

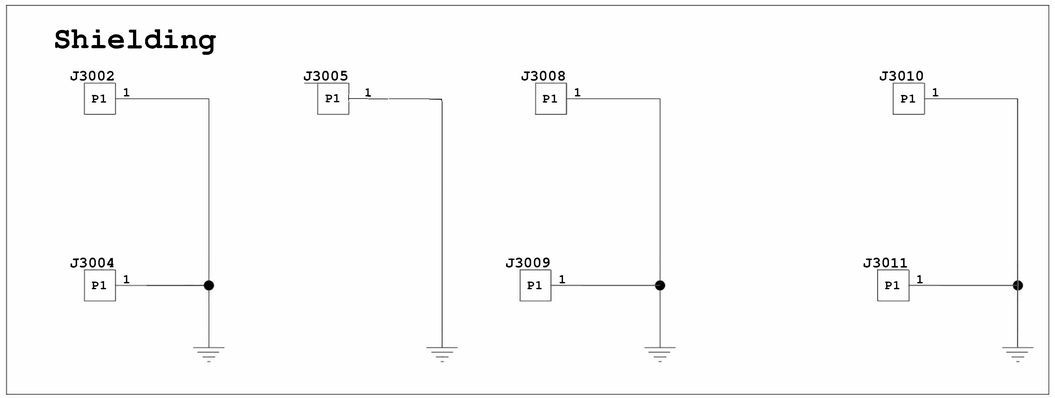

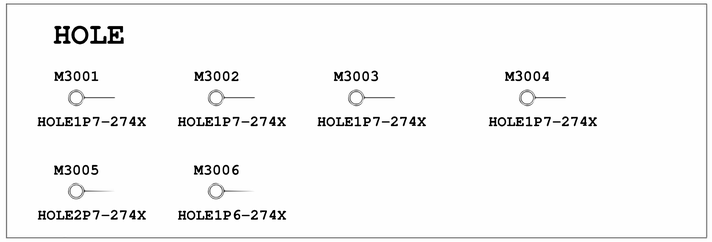

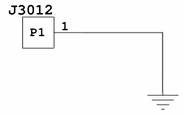

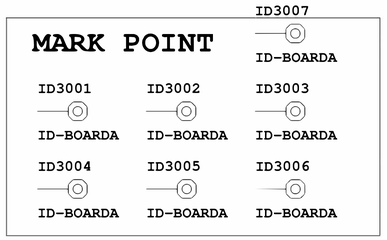

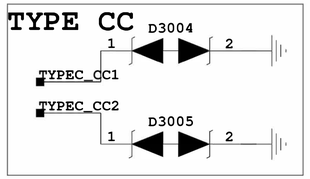

31_RF interface

RFIC0 IQ

CH0_TX_I_N
CH0_TX_I_P
CH0_TX_Q_N
CH0_TX_Q_P

CH0_RXA_I_N
CH0_RXA_I_P
CH0_RXA_Q_N
CH0_RXA_Q_P
CH0_RXB_I_N
CH0_RXB_I_P
CH0_RXB_Q_N
CH0_RXB_Q_P

CH0_RXC_I_N
CH0_RXC_I_P
CH0_RXC_Q_N
CH0_RXC_Q_P
CH0_RXD_I_N
CH0_RXD_I_P
CH0_RXD_Q_N
CH0_RXD_Q_P

Power

VOUT10_3V2

VBAT_SYS
VBATT

VCC1_RFIC0_1V29
VOUT2_1V8
VCC3_RFIC0_1V85
VCC27_RFIC0_2V4

VOUT5_1V8

VOUT14_2V85
VOUT28_1V8

APC£¨TXM_RAMP£©

CH0_TX_APC

PA temperature

TD_PA0

APT PDM

RF0_APT_PDM

RFIC interface

RF0_RFIC_TCVR_ON

RF0_RFIC_RESET
RF0_RFIC_SSI

RF0_HKADC_PDT

RF0_CLK_19M2

MIPI Interface

MIPI0_SCLK

MIPI0_SDA

NC Interface

VBAT_SYS

VOUT2_1V8

GPIO_013_CODEC_BT_FM_PCM_CLK
GPIO_012_CODEC_BT_FM_PCM_DO
GPIO_011_CODEC_BT_FM_PCM_DI
GPIO_014_CODEC_BT_FM_PCM_SYNC
GPIO_210_BT_WAKEUP_AP
GPIO_076_UART4_RTS_N
GPIO_075_UART4_CTS_N
GPIO_078_UART4_TXD
GPIO_077_UART4_RXD

GPIO_098_CDMA_GPS_SYNC

GPIO_092_ISM_PRIORITY
GPIO_089_LTE_INACTIVE
GPIO_090_LTE_RX_ACTIVE
GPIO_016_GNSS_PWM_SYNC

GPIO_091_LTE_TX_ACTIVE
GPIO_035_WIFI_EN
CLK32_BFGN
GPIO_213_WL_WAKEUP_AP

GPIO_061_WL_SDIO0_CLK
GPIO_062_WL_SDIO0_CMD
GPIO_063_WL_SDIO0_DATA0
GPIO_064_WL_SDIO0_DATA1
GPIO_065_WL_SDIO0_DATA2
GPIO_066_WL_SDIO0_DATA3

GPIO Interface

APTﾊﾟｹｯﾄ: GPIO_108_APT_EN0

ﾖｯﾌﾟﾔﾚﾎｻｼ: GPIO_214_RF0_ANT0_DET0

DPDTｽﾐｻｻ: GPIO_119_SEL07_DPDT

ｷﾖｼｯLNAﾊﾟｹｯﾄ:
GPIO_112_B40_LNA
GPIO_113_B3_LNA
GPIO_114_B41_LNA
GPIO_115_B39_LNA

SPDTｿﾘﾖﾆ:
GPIO_138_SEL26_SP2T_1
GPIO_139_SEL27_SP2T_2

ﾌﾞｿﾘﾖﾆ

ﾏｿﾌﾟ
GPIO_127_SEL15

ﾉﾏﾌﾟ
GPIO_128_SEL16

ANT interface

MIPI0_SCLK

MIPI0_SDA

VBAT_SYS

VOUT2_1V8

VOUT14_2V85

VOUT28_1V8

32_RF Transceiver0

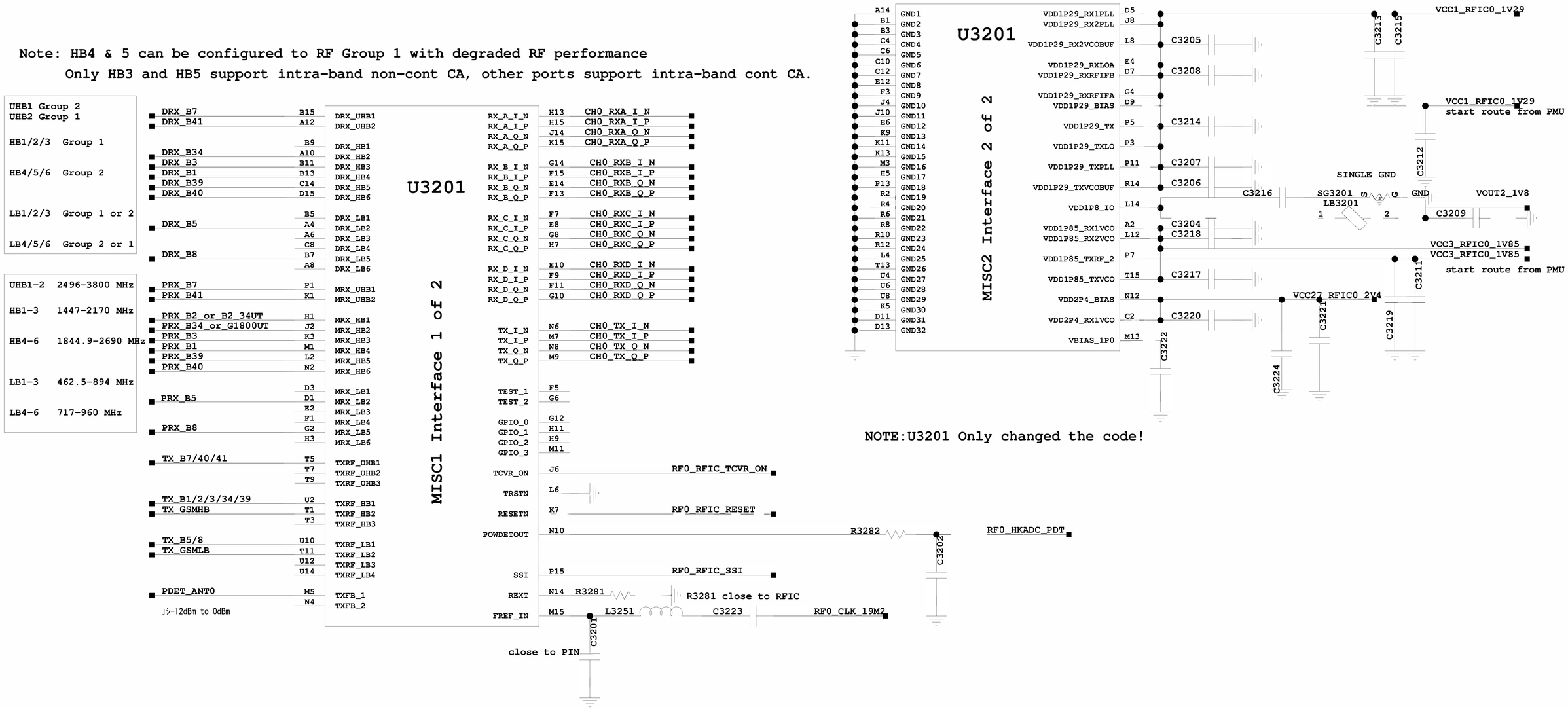

33_APT Power

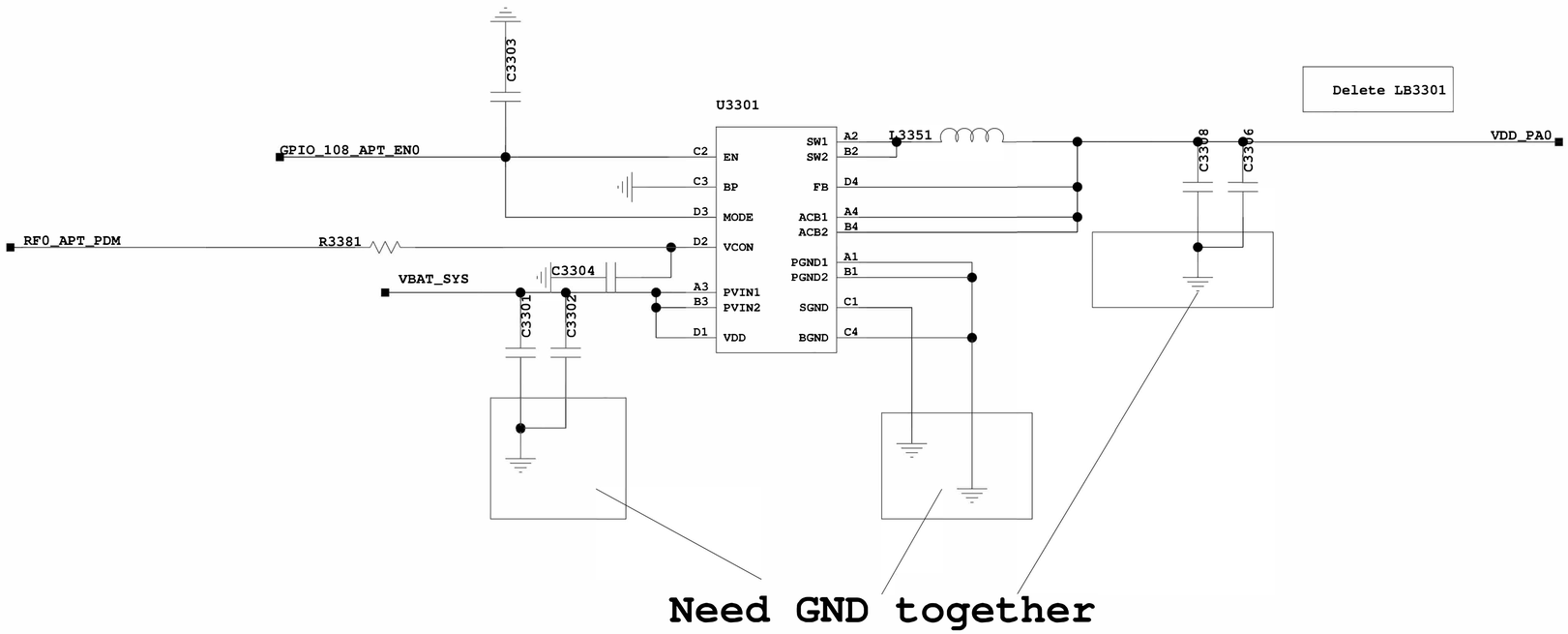
C3303
U3301
Delete LB3301
GPIO_108_APT_EN0
C2
EN
SW1
SW2
A2
B2
L3351
C3308
C3306
VDD_PA0
C3
BP
FB
D4
D3
MODE
ACB1
ACB2
A4
B4
RF0_APT_PDM
R3381
D2
VCON
PGND1
PGND2
A1
B1
VBAT_SYS
C3304
A3
B3
PVIN1
PVIN2
SGND
C1
C3301
C3302
D1
VDD
BGND
C4
Need GND together

34_RF Power System

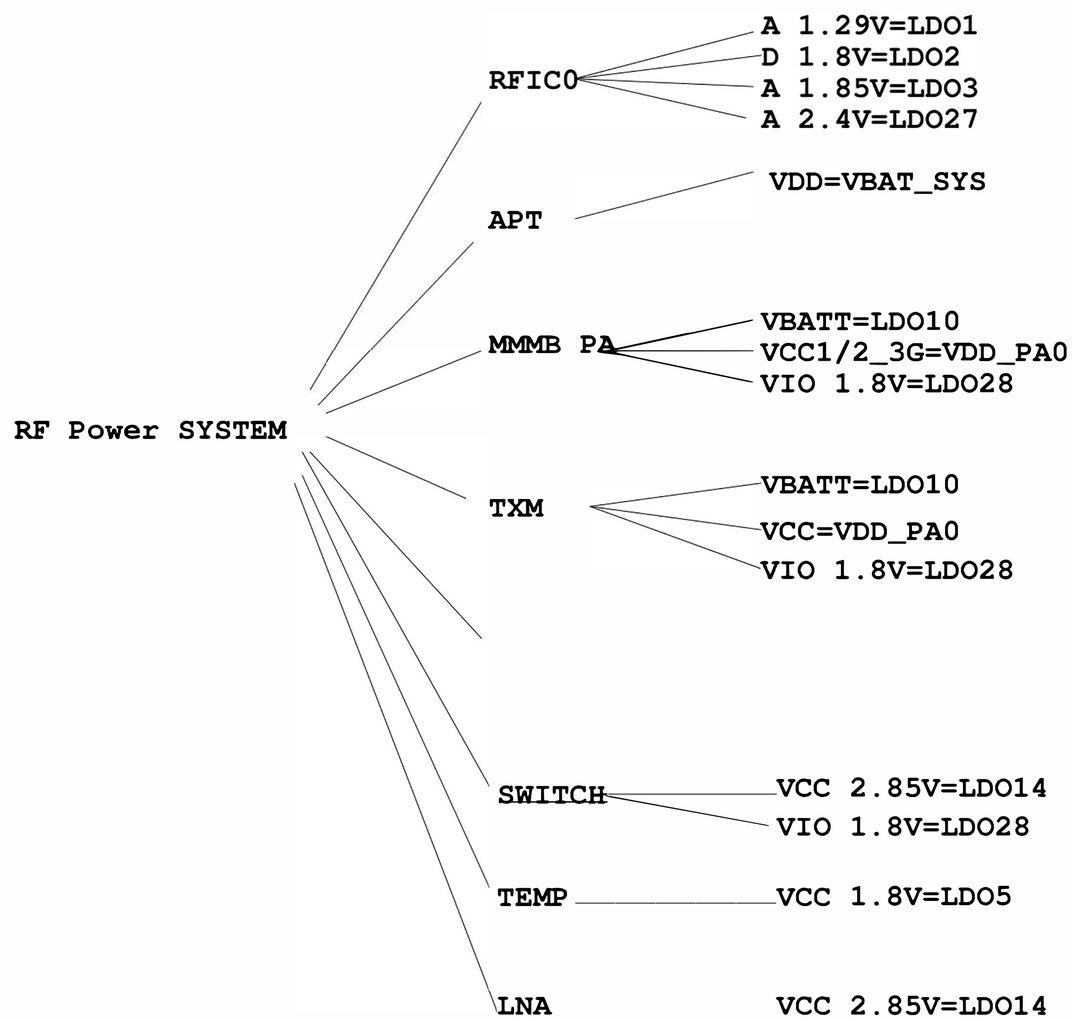

36. MMB PA

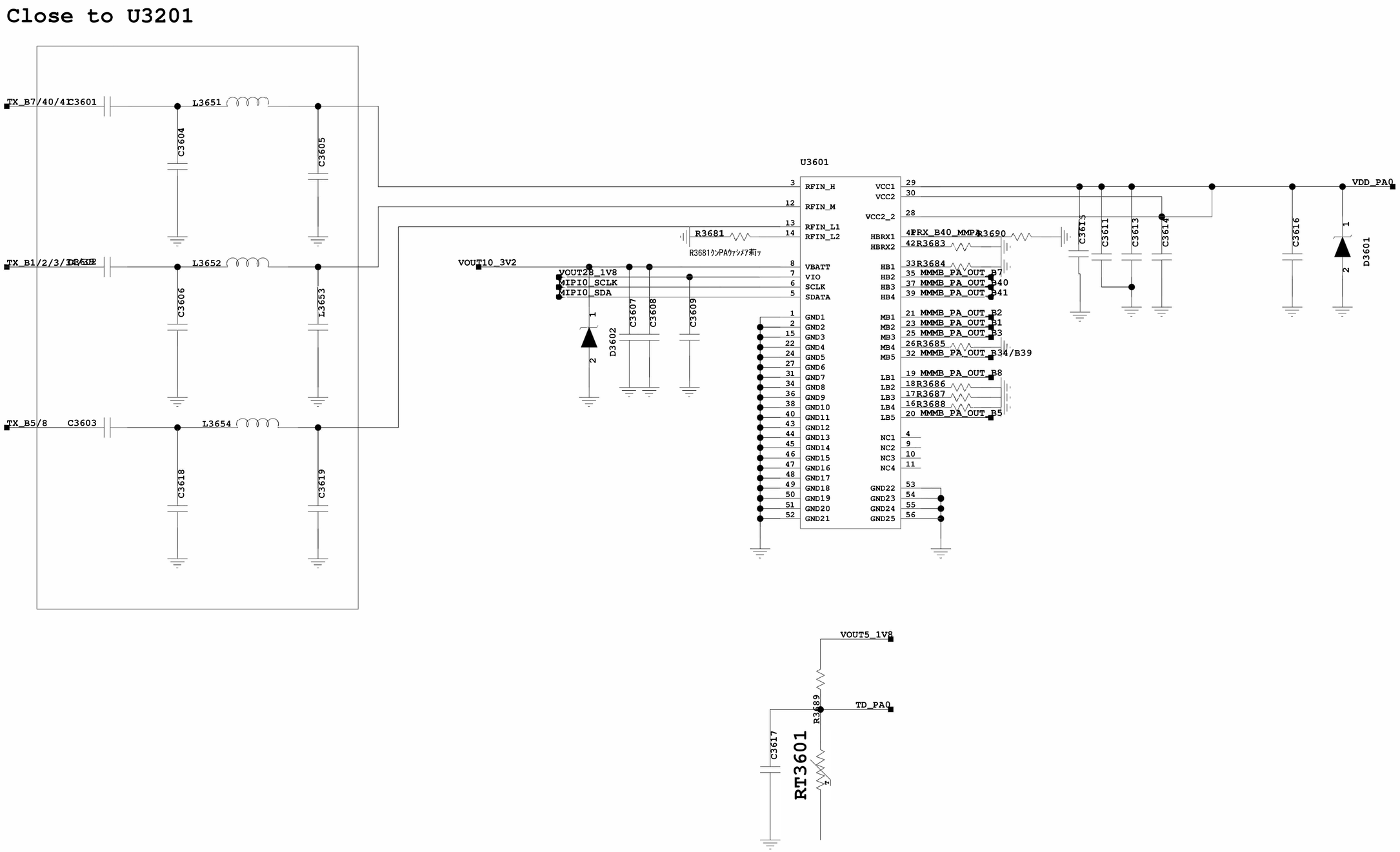
Close to U3201
TX_B7/40/41
C3601
L3651
C3604
C3605
TX_B1/2/3/34/39
C3602
L3652
C3606
L3653
TX_B5/8
C3603
L3654
C3618
C3619
U3601
RFIN_H
RFIN_M
RFIN_L1
RFIN_L2
R3681
R3681ケンPAウァシメア利ッ
VOUT10_3V2
VBATT
VIO
SCLK
SDATA
VOUT28_1V8
MIPIO_SCLK
MIPIO_SDA
D3602
C3607
C3608
C3609
GND1
GND2
GND3
GND4
GND5
GND6
GND7
GND8
GND9
GND10
GND11
GND12
GND13
GND14
GND15
GND16
GND17
GND18
GND19
GND20
GND21
VCC1
VCC2
VCC2_2
HBRX1
HBRX2
PRX_B40_MMPA
R3690
R3683
R3684
HB1
HB2
HB3
HB4
MMMB_PA_OUT_B7
MMMB_PA_OUT_B40
MMMB_PA_OUT_B41
MB1
MB2
MB3
MB4
MB5
MMMB_PA_OUT_B2
MMMB_PA_OUT_B1
MMMB_PA_OUT_B3
R3685
MMMB_PA_OUT_B34/B39
LB1
LB2
LB3
LB4
LB5
MMMB_PA_OUT_B8
R3686
R3687
R3688
MMMB_PA_OUT_B5
NC1
NC2
NC3
NC4
GND22
GND23
GND24
GND25
C3612
C3611
C3613
C3614
C3616
D3601
VDD_PA0
VOUT5_1V8
R3689
TD_PA0
C3617
RT3601

37_Matching_circuit

Close to MMPA

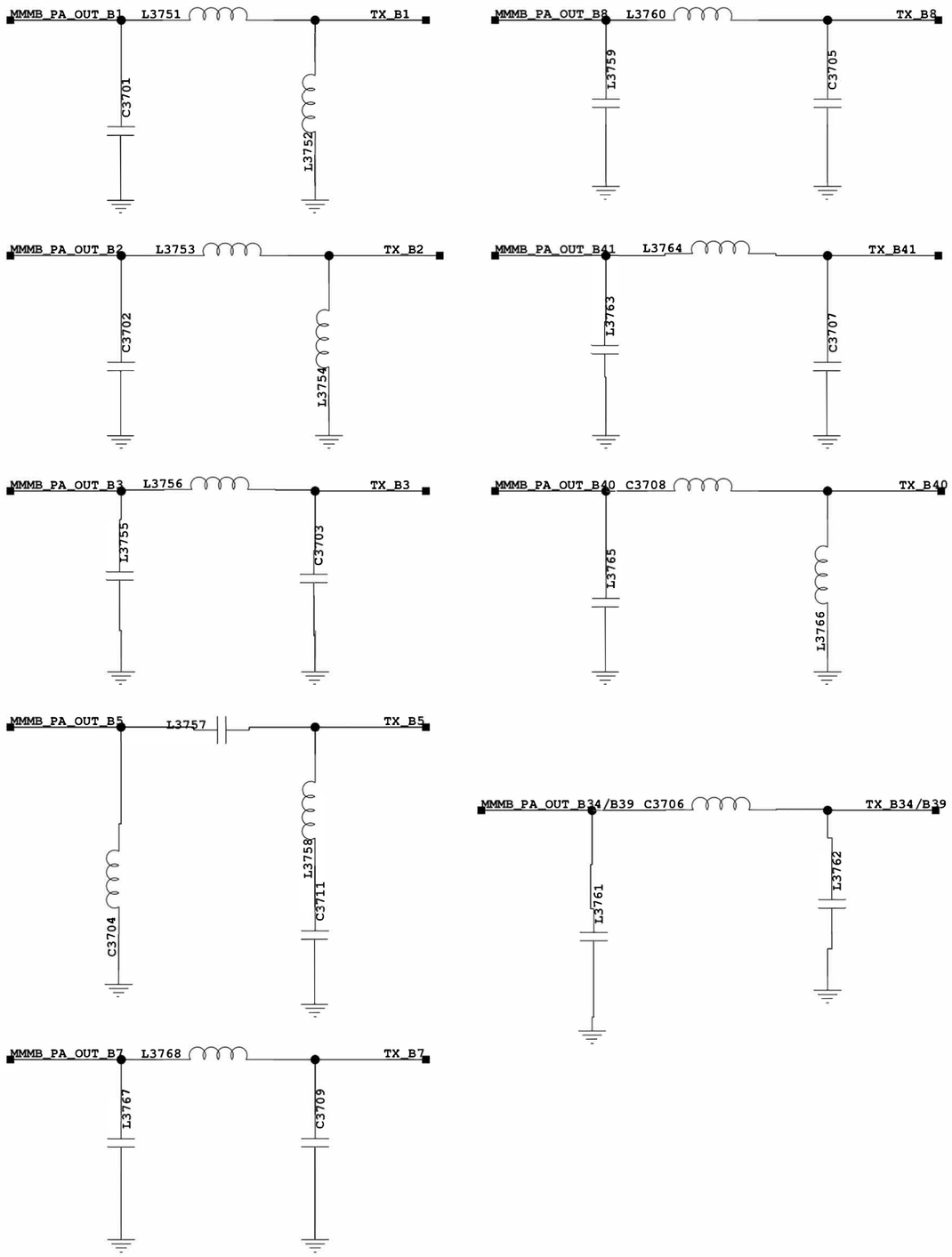

Phase2PAシ貶ン

38_TRX_B1/B2//B3

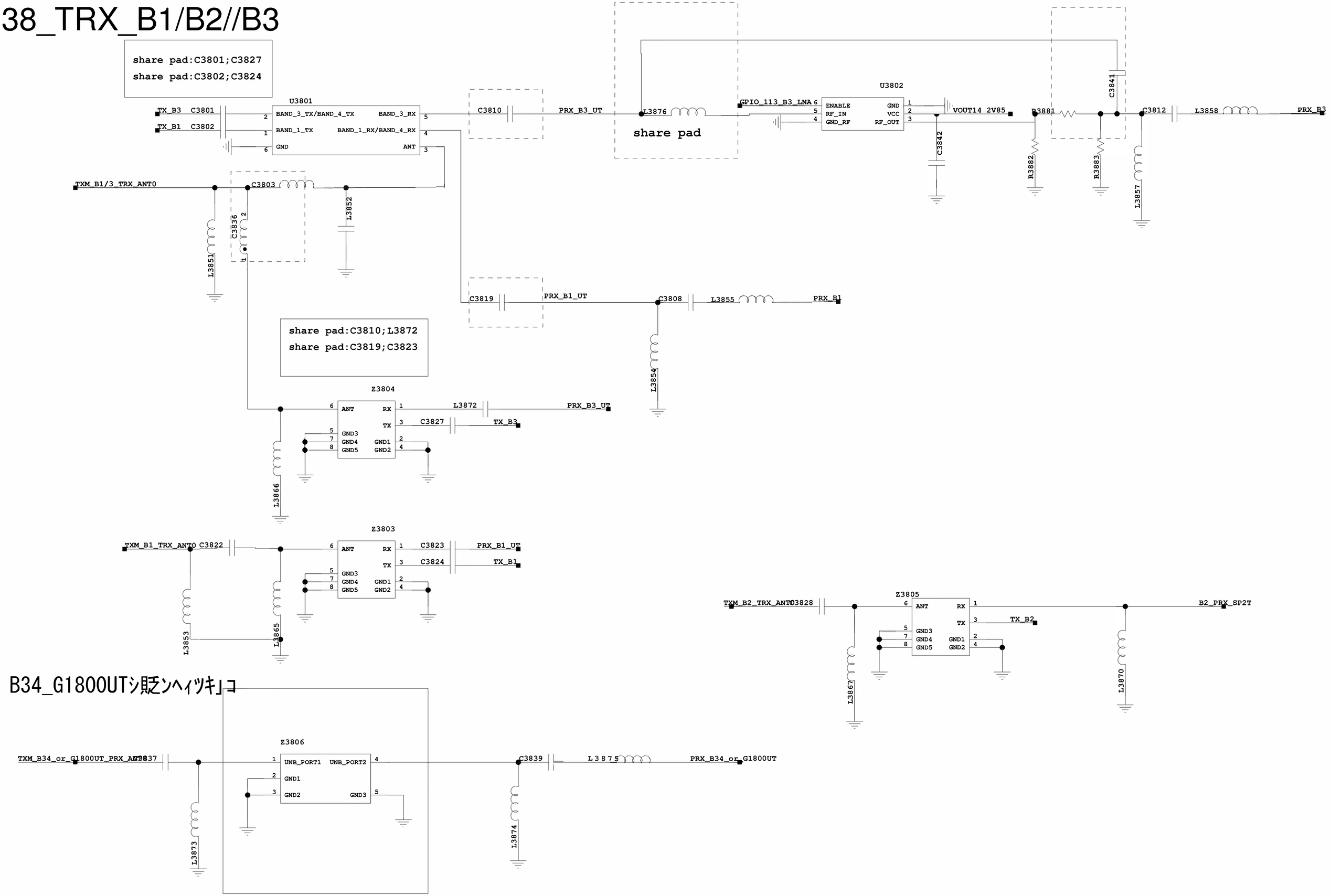

39_TRX B5/7/8

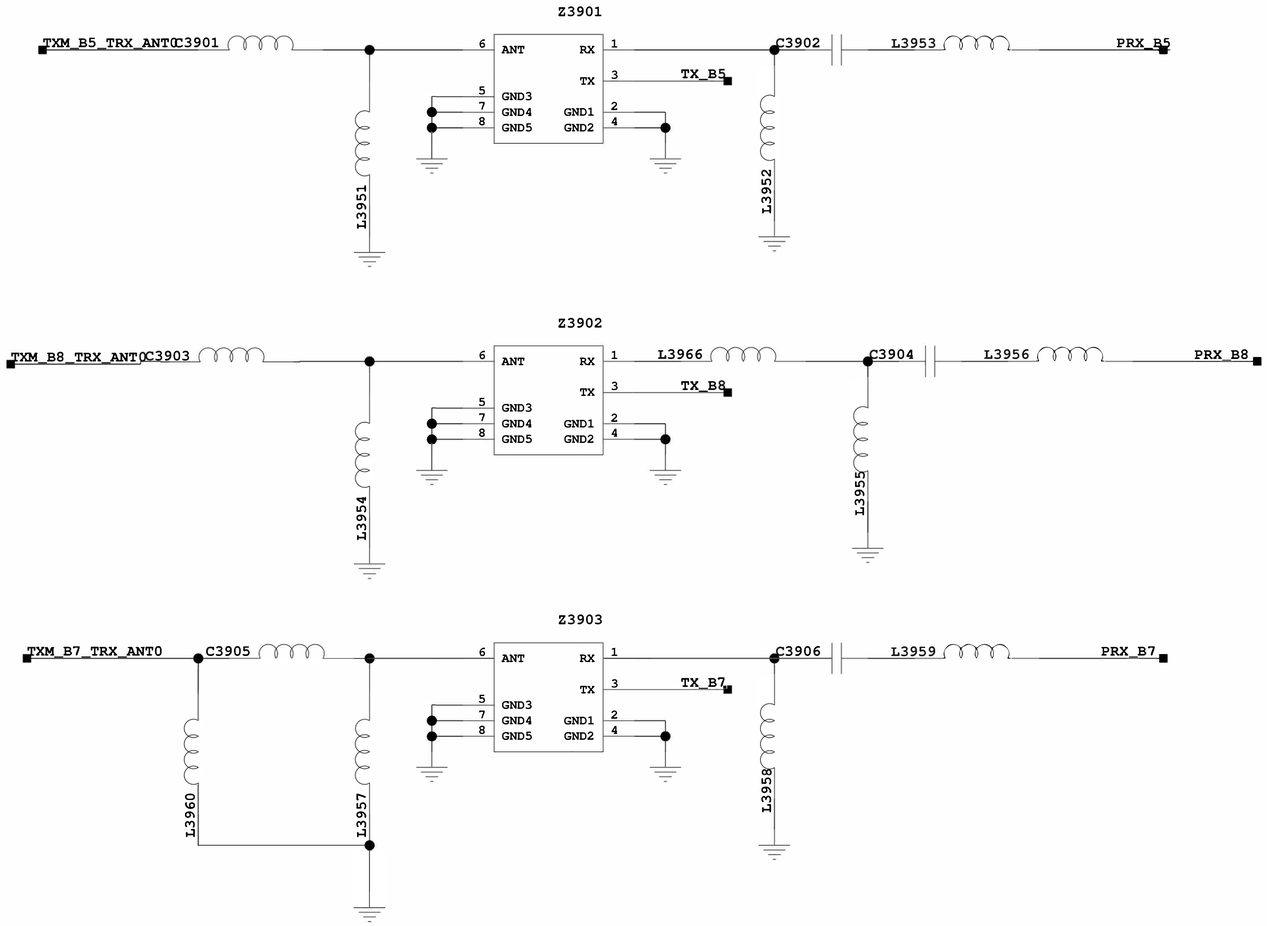
Z3901
TXM_B5_TRX_ANT0
C3901
L3951
6
ANT
RX
1
C3902
L3953
PRX_B5
3
TX
TX_B5
5
GND3
7
GND4
8
GND5
GND1
2
GND2
4
L3952
Z3902
TXM_B8_TRX_ANT0
C3903
L3954
L3966
C3904
L3956
PRX_B8
TX_B8
L3955
Z3903
TXM_B7_TRX_ANT0
C3905
L3960
L3957
C3906
L3959
PRX_B7
TX_B7
L3958

40_TRX B34/39/40/41

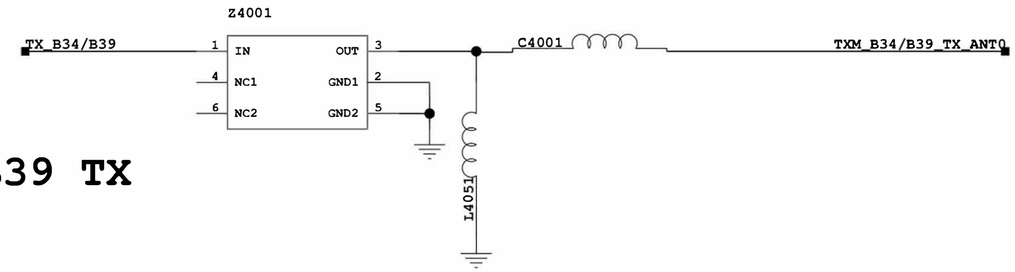

B34/B39 TX

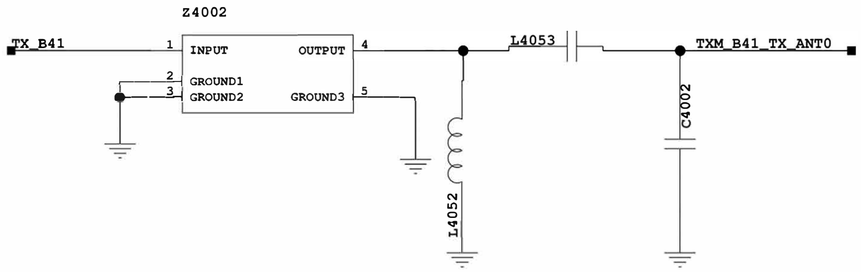

B41 TX

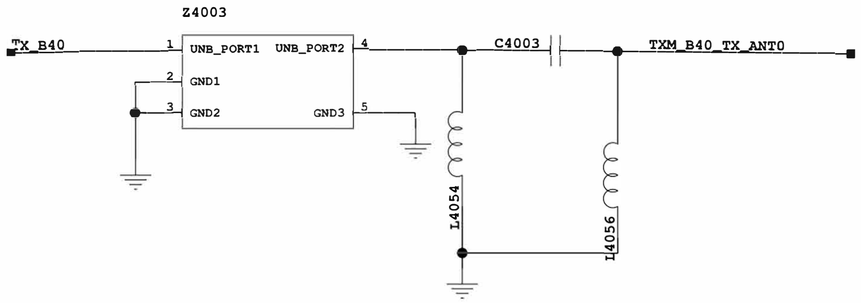

B40 TX

41_PRX B34/39/41

B34_UTｼ貶ﾝﾍｨﾂｷ｣ｺ

B34 PRX

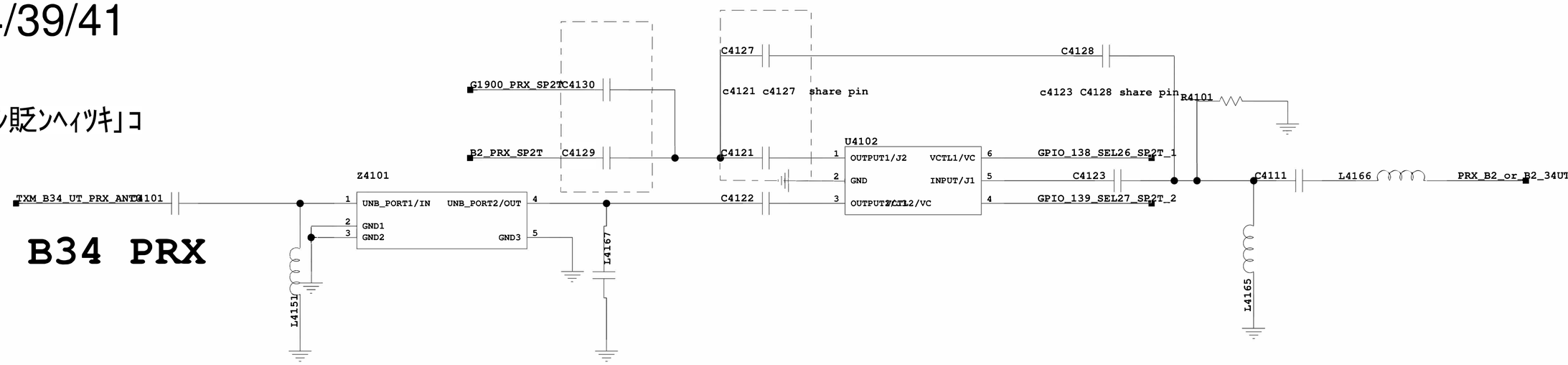

B39/B41 PRX

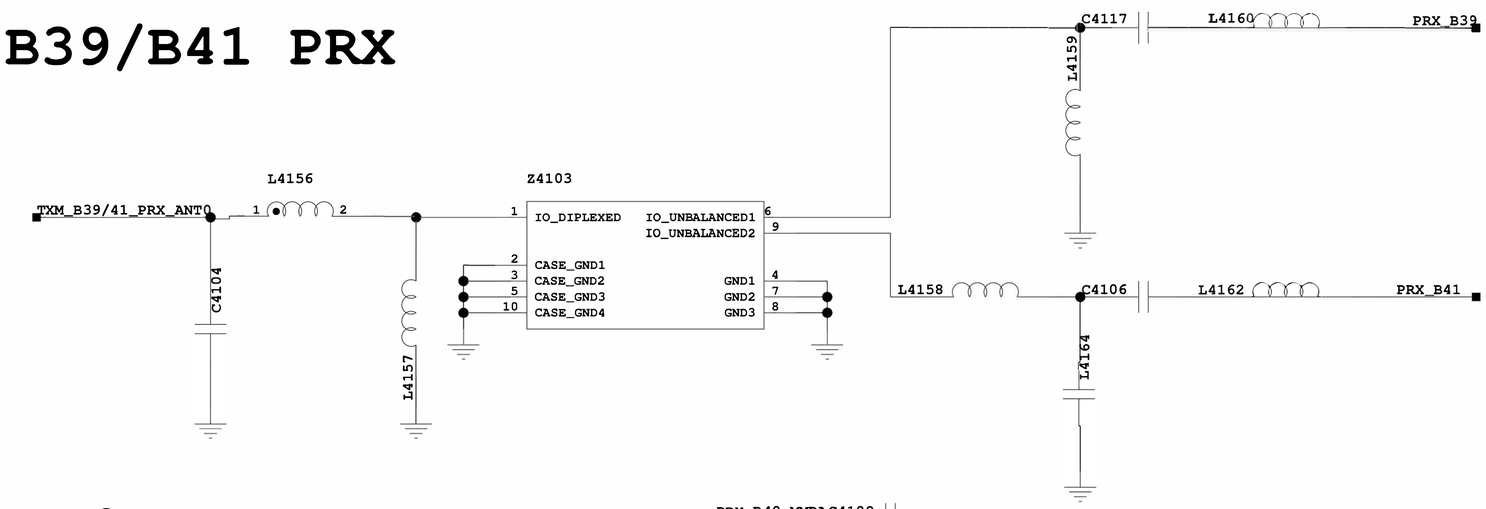

B40 PRX

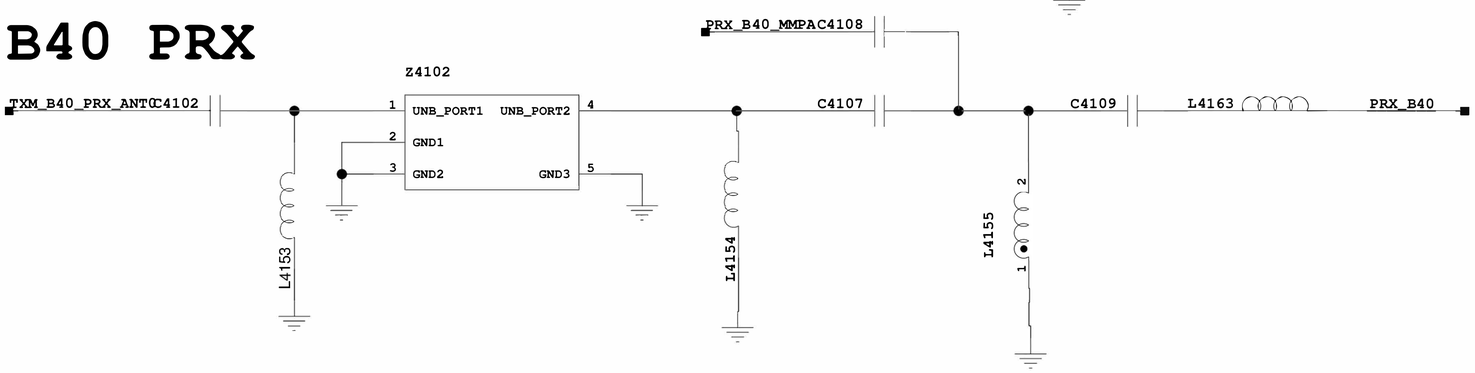

42_PRX_G1900

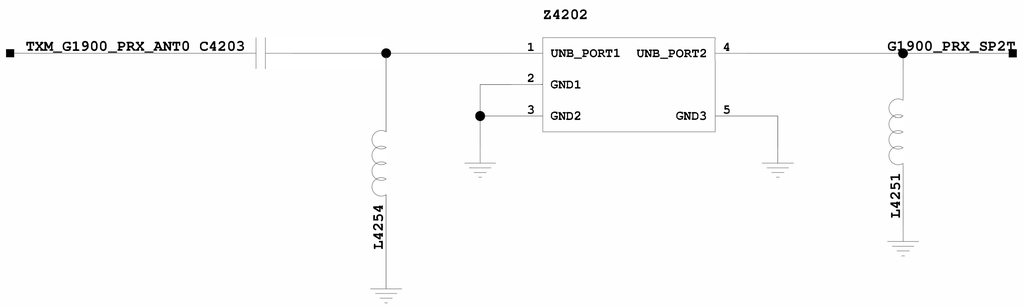
Z4202
TXM_G1900_PRX_ANT0 C4203
1
UNB_PORT1
UNB_PORT2
4
G1900_PRX_SP2T
2
GND1
3
GND2
GND3
5
L4254
L4251

43_MAIN_ANT0_SWITCH

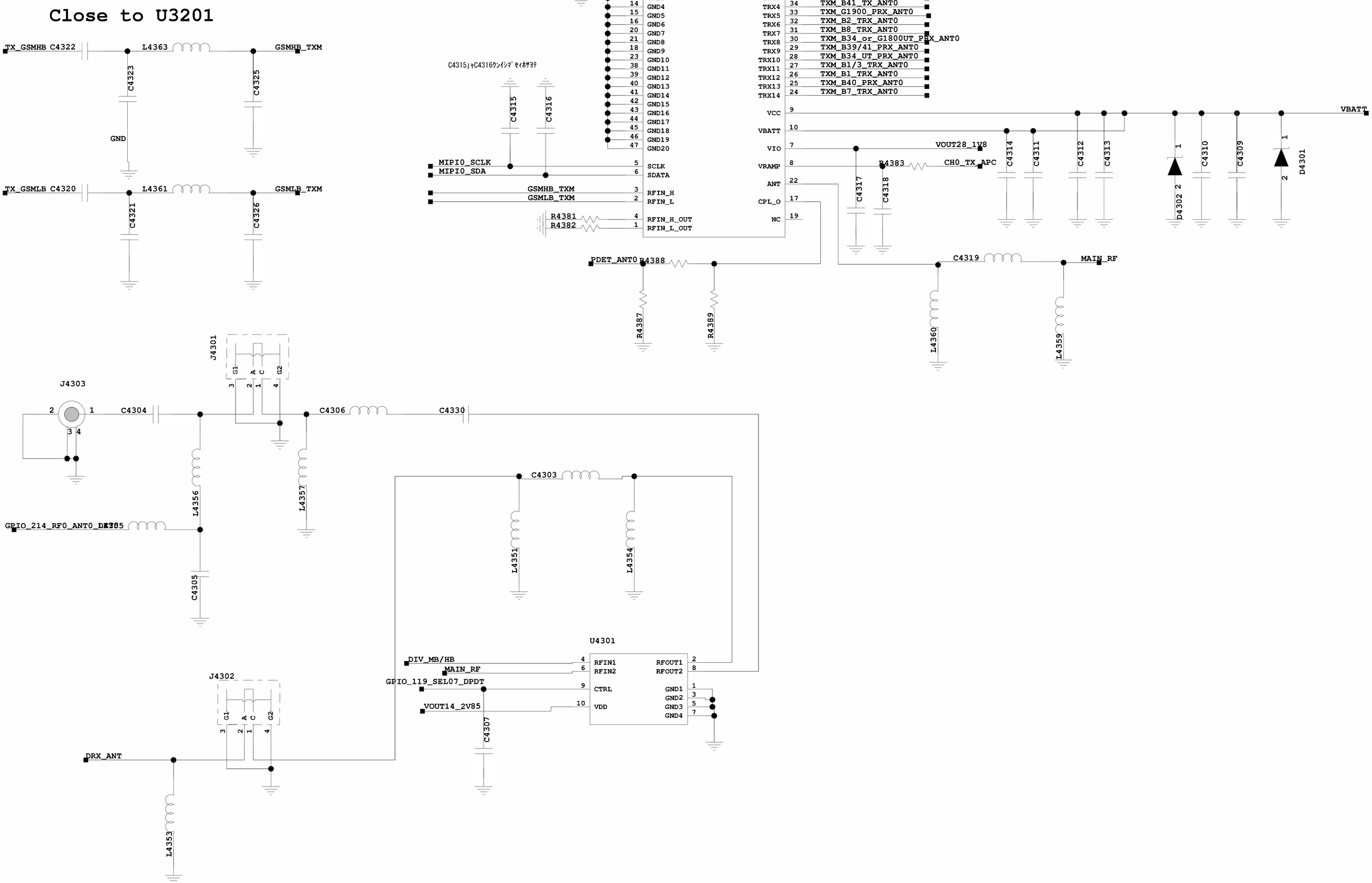

44_DIV_ANT1_SWITCH

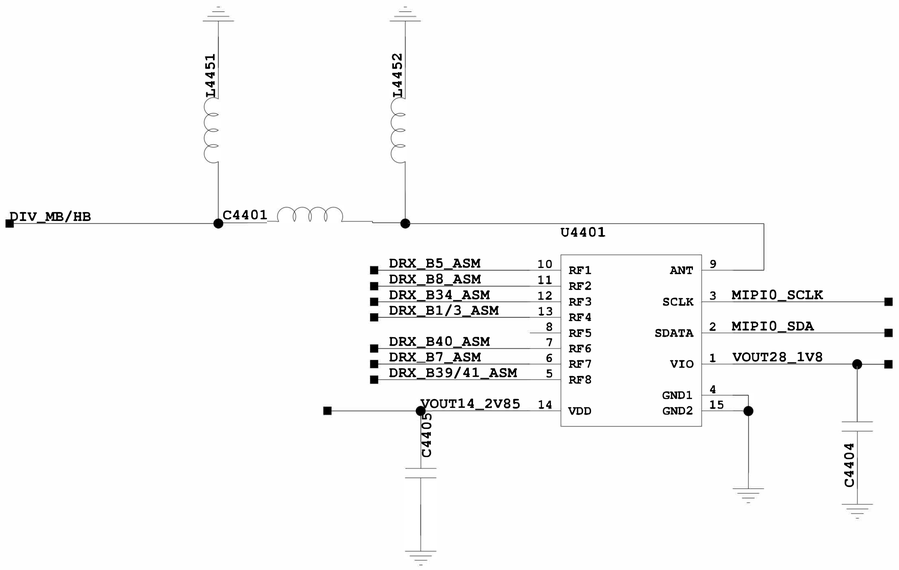

45_DRX B1/3/5/7/8

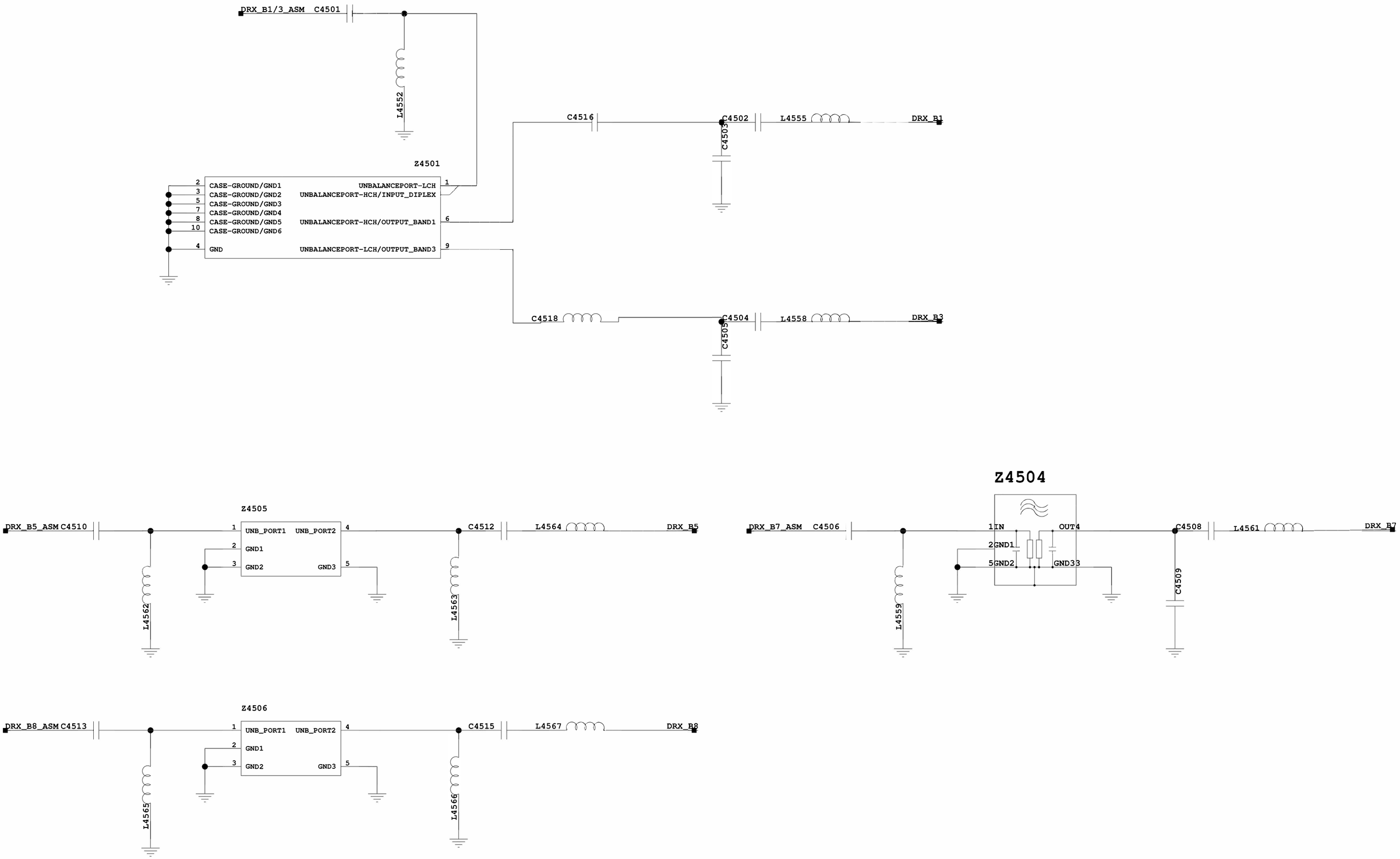

46_DRX B39/40/41

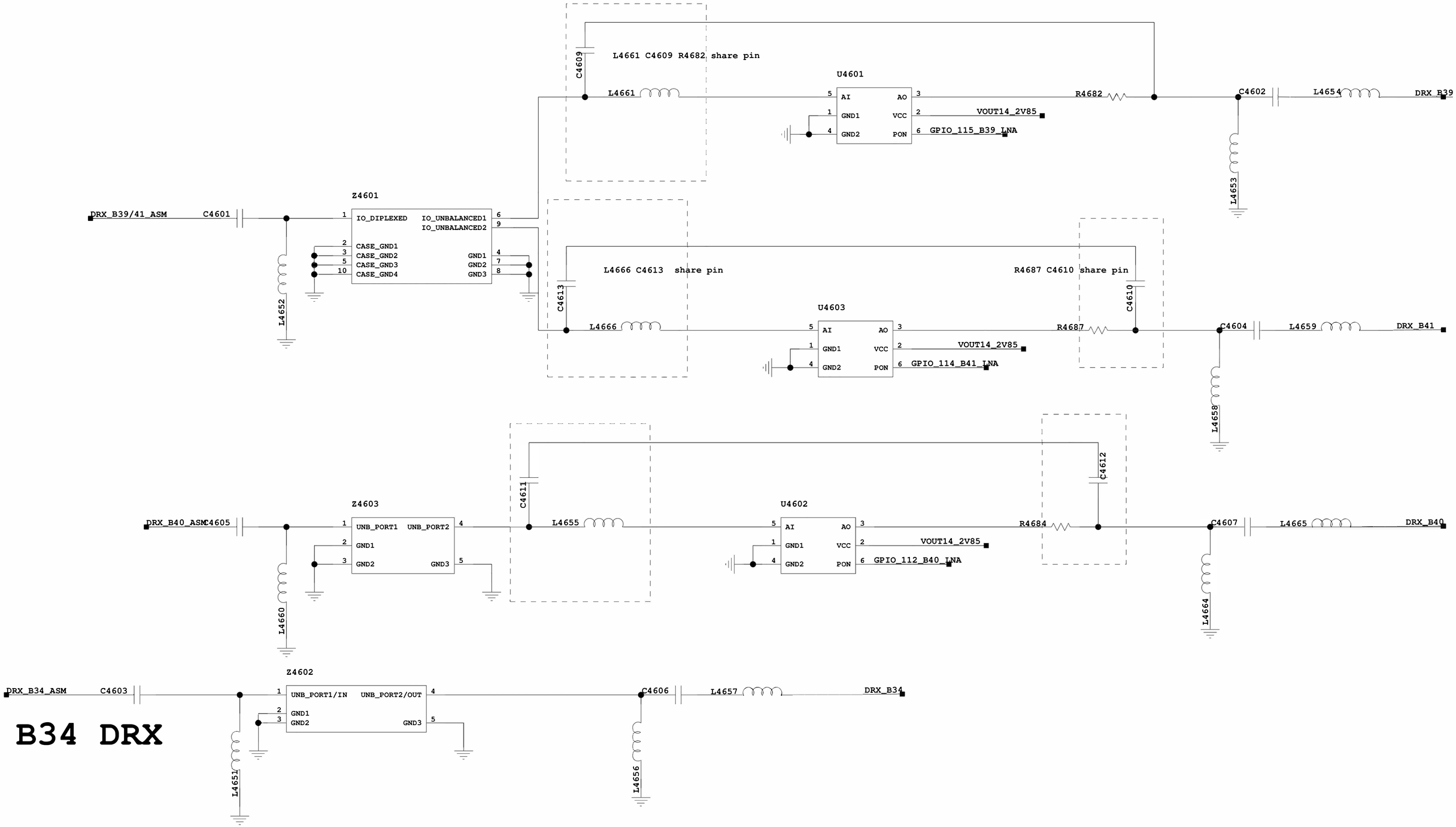

B34 DRX

60 NC_POWER

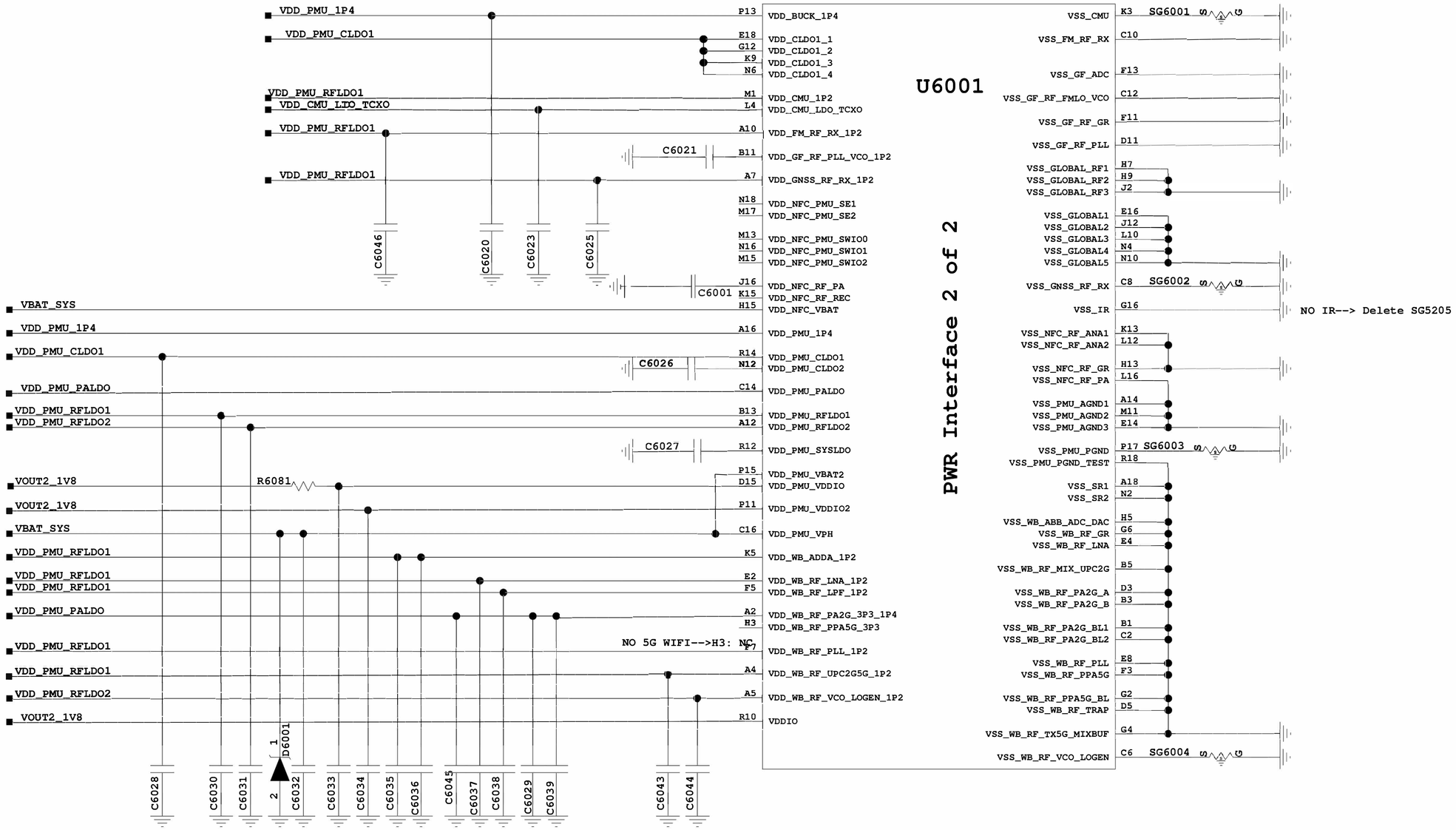
U6001
PWR Interface 2 of 2
VDD_PMU_1P4
VDD_PMU_CLDO1
VDD_PMU_RFLDO1
VDD_CMU_LDO_TCXO
VDD_PMU_RFLDO1
VDD_PMU_RFLDO1
VBAT_SYS
VDD_PMU_1P4
VDD_PMU_CLDO1
VDD_PMU_PALDO
VDD_PMU_RFLDO1
VDD_PMU_RFLDO2
VOUT2_1V8
VOUT2_1V8
VBAT_SYS
VDD_PMU_RFLDO1
VDD_PMU_RFLDO1
VDD_PMU_RFLDO1
VDD_PMU_PALDO
VDD_PMU_RFLDO1
VDD_PMU_RFLDO1
VDD_PMU_RFLDO2
VOUT2_1V8
R6081
NO 5G WIFI-->H3: NC
C6021
C6026
C6027
C6001
C6046
C6020
C6023
C6025
C6028
C6030
C6031
C6032
C6033
C6034
C6035
C6036
C6045
C6037
C6038
C6029
C6039
C6043
C6044
D6001
P13 VDD_BUCK_1P4
E18 VDD_CLDO1_1
G12 VDD_CLDO1_2
K9 VDD_CLDO1_3
N6 VDD_CLDO1_4
M1 VDD_CMU_1P2
L4 VDD_CMU_LDO_TCXO
A10 VDD_FM_RF_RX_1P2
B11 VDD_GF_RF_PLL_VCO_1P2
A7 VDD_GNSS_RF_RX_1P2
N18 VDD_NFC_PMU_SE1
M17 VDD_NFC_PMU_SE2
M13 VDD_NFC_PMU_SWIO0
N16 VDD_NFC_PMU_SWIO1
M15 VDD_NFC_PMU_SWIO2
J16 VDD_NFC_RF_PA
K15 VDD_NFC_RF_REC
H15 VDD_NFC_VBAT
A16 VDD_PMU_1P4
R14 VDD_PMU_CLDO1
N12 VDD_PMU_CLDO2
C14 VDD_PMU_PALDO
B13 VDD_PMU_RFLDO1
A12 VDD_PMU_RFLDO2
R12 VDD_PMU_SYSLDO
P15 VDD_PMU_VBAT2
D15 VDD_PMU_VDDIO
P11 VDD_PMU_VDDIO2
C16 VDD_PMU_VPH
K5 VDD_WB_ADDA_1P2
E2 VDD_WB_RF_LNA_1P2
F5 VDD_WB_RF_LPF_1P2
A2 VDD_WB_RF_PA2G_3P3_1P4
H3 VDD_WB_RF_PPA5G_3P3
F7 VDD_WB_RF_PLL_1P2
A4 VDD_WB_RF_UPC2G5G_1P2
A5 VDD_WB_RF_VCO_LOGEN_1P2
R10 VDDIO
K3 VSS_CMU
C10 VSS_FM_RF_RX
F13 VSS_GF_ADC
C12 VSS_GF_RF_FMLO_VCO
F11 VSS_GF_RF_GR
D11 VSS_GF_RF_PLL
H7 VSS_GLOBAL_RF1
H9 VSS_GLOBAL_RF2
J2 VSS_GLOBAL_RF3
E16 VSS_GLOBAL1
J12 VSS_GLOBAL2
L10 VSS_GLOBAL3
N4 VSS_GLOBAL4
N10 VSS_GLOBAL5
C8 VSS_GNSS_RF_RX
G16 VSS_IR
K13 VSS_NFC_RF_ANA1
L12 VSS_NFC_RF_ANA2
H13 VSS_NFC_RF_GR
L16 VSS_NFC_RF_PA
A14 VSS_PMU_AGND1
M11 VSS_PMU_AGND2
E14 VSS_PMU_AGND3
P17 VSS_PMU_PGND
R18 VSS_PMU_PGND_TEST
A18 VSS_SR1
N2 VSS_SR2
H5 VSS_WB_ABB_ADC_DAC
G6 VSS_WB_RF_GR
E4 VSS_WB_RF_LNA
B5 VSS_WB_RF_MIX_UPC2G
D3 VSS_WB_RF_PA2G_A
B3 VSS_WB_RF_PA2G_B
B1 VSS_WB_RF_PA2G_BL1
C2 VSS_WB_RF_PA2G_BL2
E8 VSS_WB_RF_PLL
F3 VSS_WB_RF_PPA5G
G2 VSS_WB_RF_PPA5G_BL
D5 VSS_WB_RF_TRAP
G4 VSS_WB_RF_TX5G_MIXBUF
C6 VSS_WB_RF_VCO_LOGEN
SG6001
SG6002
SG6003
SG6004
NO IR--> Delete SG5205

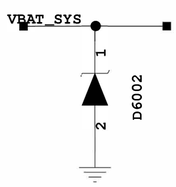
VBAT_SYS
D6002

61 NC_BB

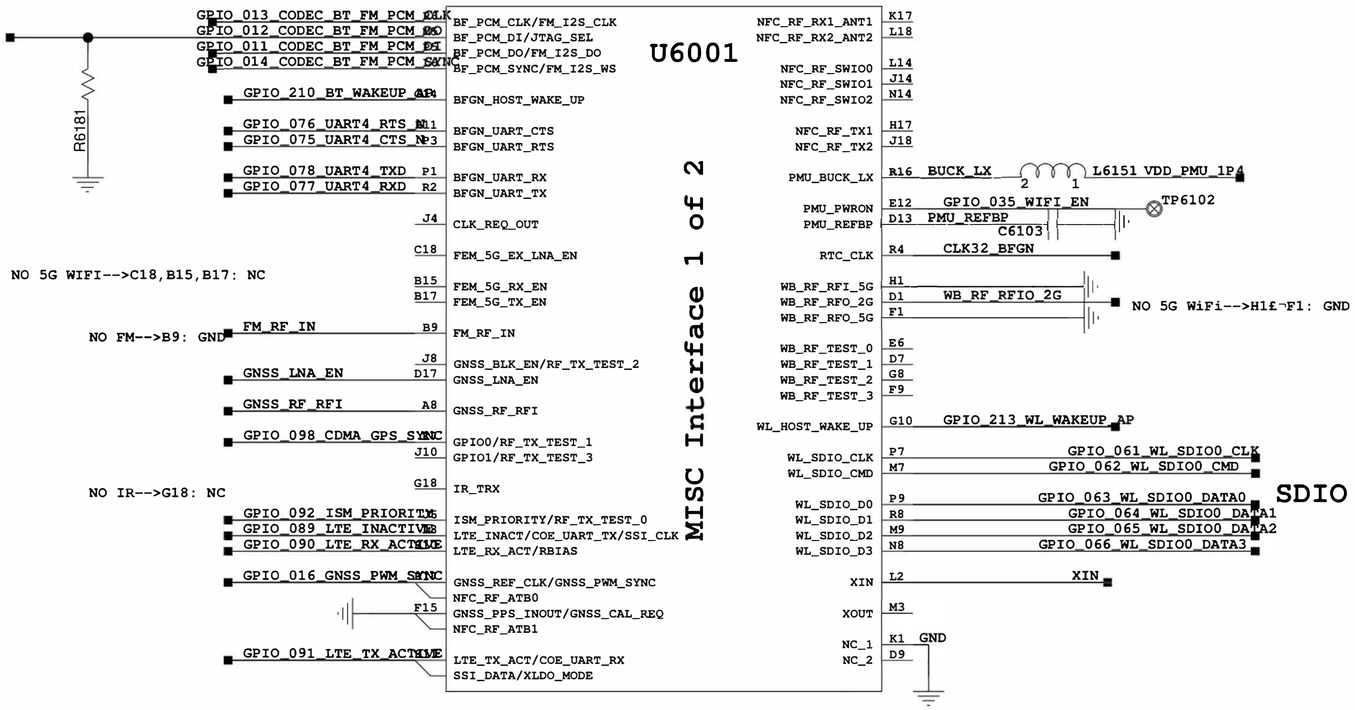

TCXO 38.4MHz

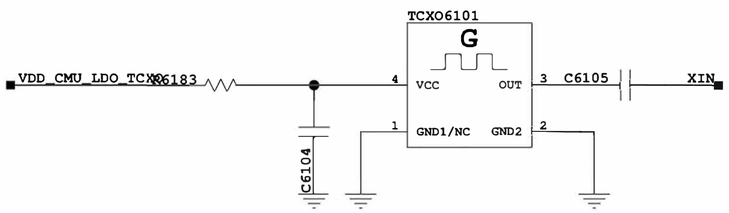

62 NC_FE_WIFI_2G

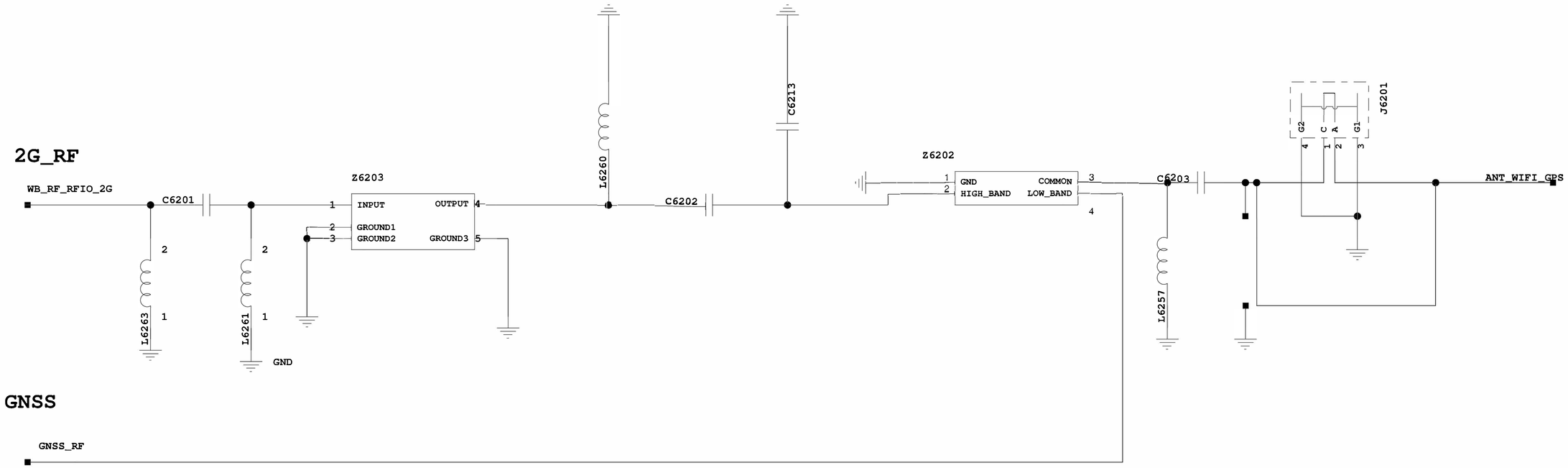

64 NC_GPS

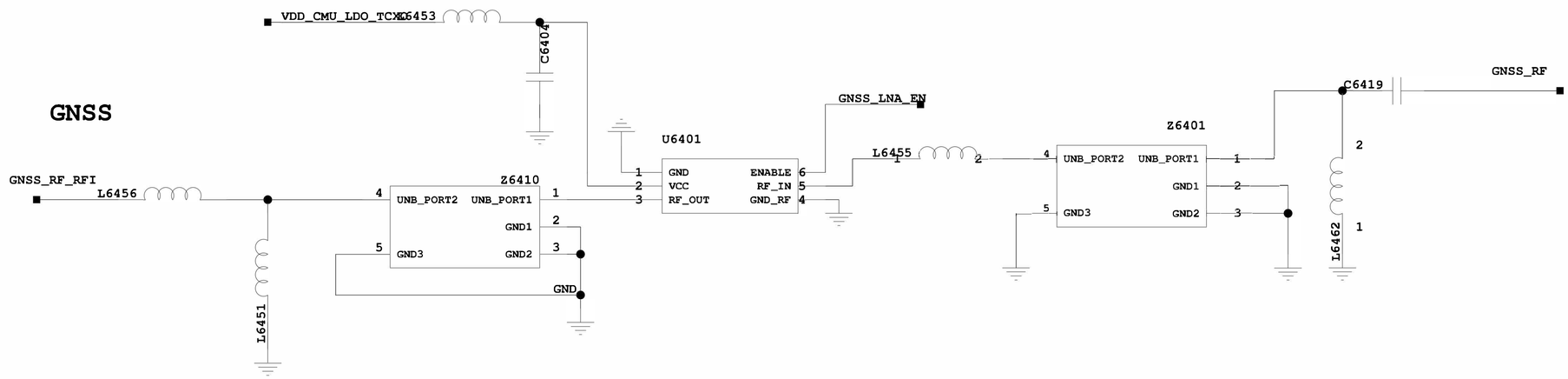
GNSS
VDD_CMU_LDO_TCXO
L6453
C6404
GNSS_RF_RFI
L6456
L6451
Z6410
UNB_PORT2
UNB_PORT1
GND1
GND3
GND2
GND
U6401
GND
VCC
RF_OUT
ENABLE
RF_IN
GND_RF
GNSS_LNA_EN
L6455
Z6401
UNB_PORT2
UNB_PORT1
GND1
GND3
GND2
C6419
GNSS_RF
L6462

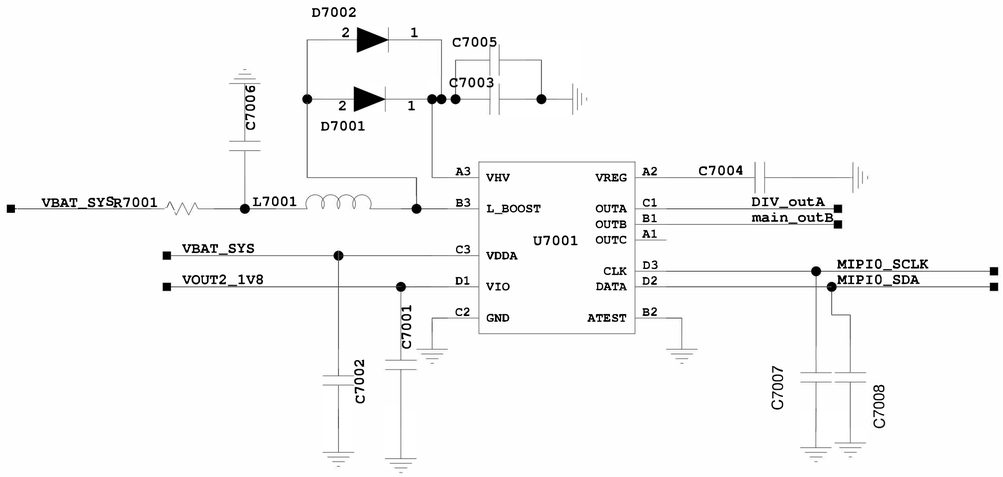
D7002
2
1
C7005
C7003
C7006
2
1
D7001
A3
VHV
VREG
A2
C7004
VBAT_SYS
R7001
L7001
B3
L_BOOST
OUTA
C1
DIV_outA
OUTB
B1
main_outB
U7001
OUTC
A1
VBAT_SYS
C3
VDDA
MIPI0_SCLK
CLK
D3
VOUT2_1V8
D1
VIO
DATA
D2
MIPI0_SDA
C2
GND
ATEST
B2
C7001
C7002
C7007
C7008

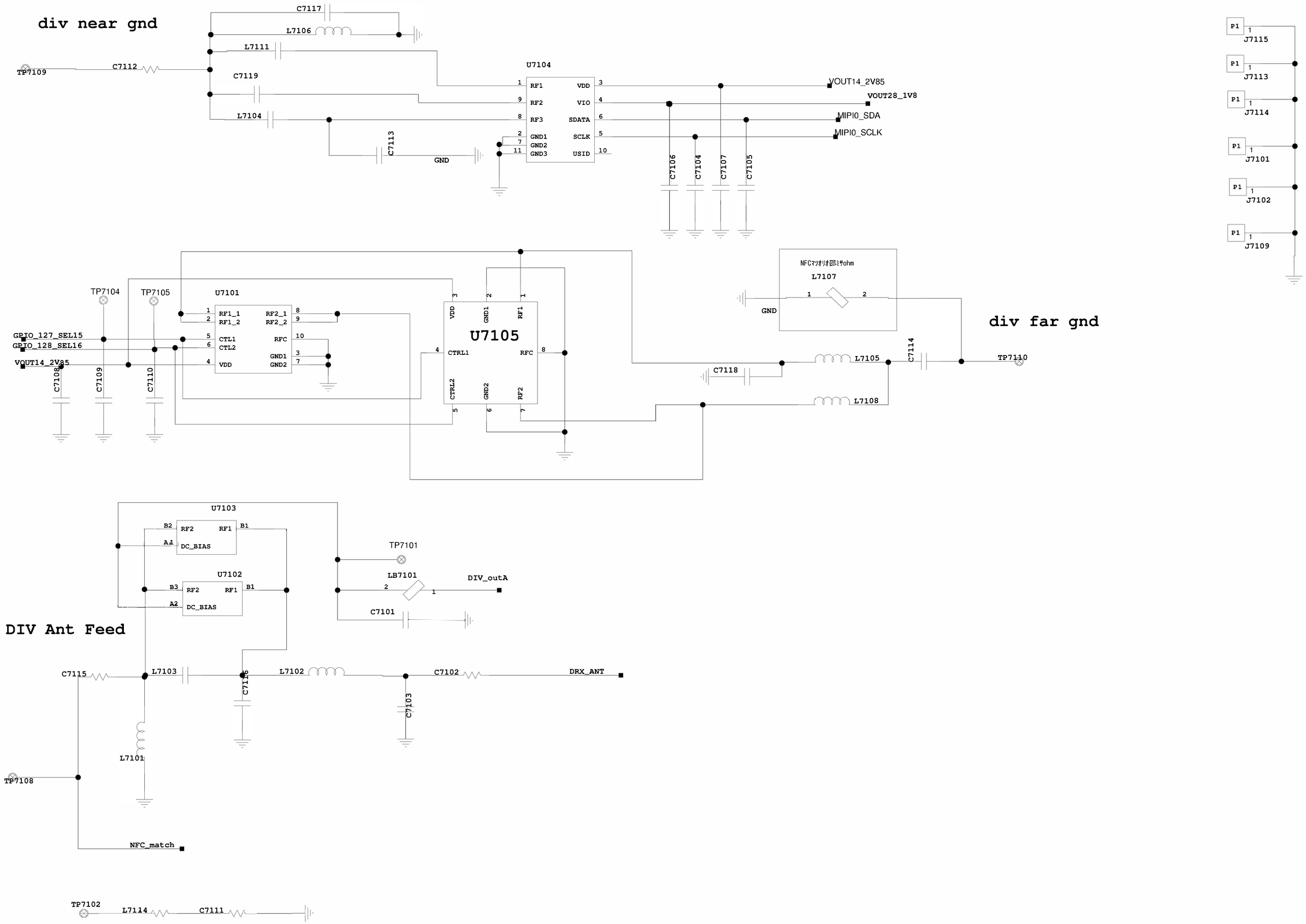
div near gnd
C7117
L7106
L7111
TP7109
C7112
C7119
L7104
C7113
GND
U7104
RF1
RF2
RF3
GND1
GND2
GND3
VDD
VIO
SDATA
SCLK
USID
VOUT14_2V85
VOUT28_1V8
MIPI0_SDA
MIPI0_SCLK
C7106
C7104
C7107
C7105
P1
J7115
J7113
J7114
J7101
J7102
J7109
TP7104
TP7105
U7101
RF1_1
RF1_2
CTL1
CTL2
VDD
RF2_1
RF2_2
RFC
GND1
GND2
GPIO_127_SEL15
GPIO_128_SEL16
VOUT14_2V85
C7108
C7109
C7110
U7105
VDD
GND1
RF1
CTRL1
RFC
CTRL2
GND2
RF2
NFCマッオリオ召ロミサohm
L7107
GND
C7118
L7105
L7108
C7114
TP7110
div far gnd
U7103
B2
RF2
RF1
B1
A1
DC_BIAS
U7102
B3
RF2
RF1
B1
A2
DC_BIAS
TP7101
LB7101
DIV_outA
C7101
DIV Ant Feed
C7115
L7103
C7116
L7102
C7102
DRX_ANT
C7103
L7101
TP7108
NFC_match
TP7102
L7114
C7111

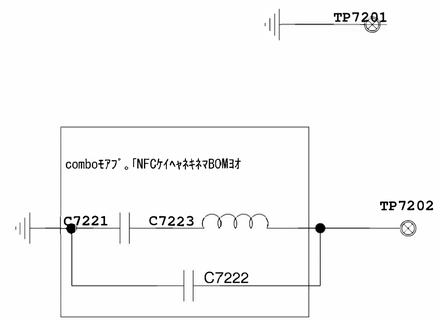

2.4G/5GWiFi&GPSAnt

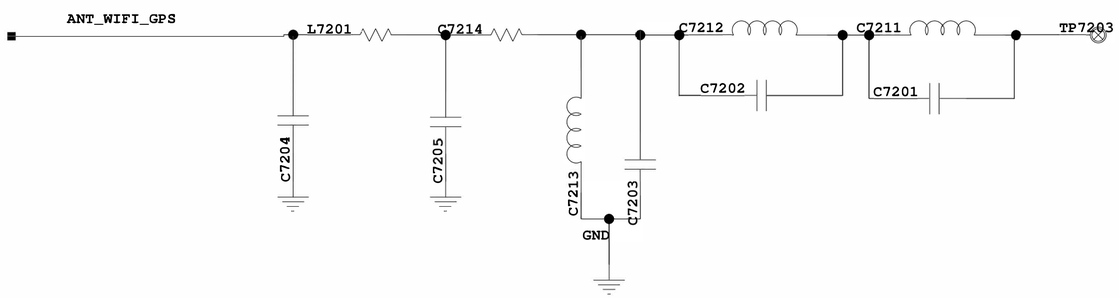

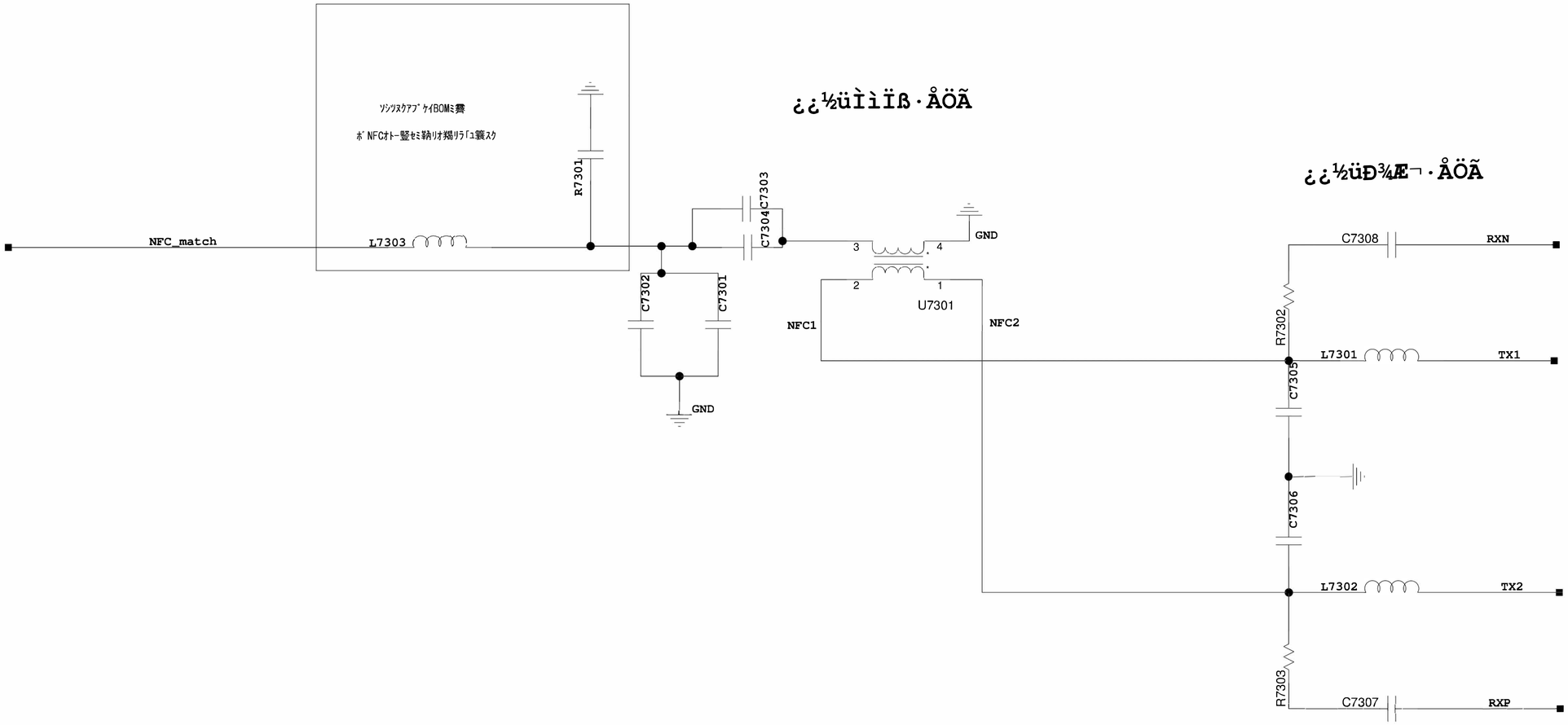
ｿｼﾘｽｸｱﾌﾟｹｲBOMﾐ舞
ﾎﾞNFCｵﾄｰ竪ｾﾐ羊ﾅﾘｵ羯ﾘﾗ「ｭ簔ｽｸ
R7301
NFC_match
L7303
C7302
C7301
GND
C7303
C7304
¿¿½üÌìÏß·ÅÖÃ
3
4
2
1
U7301
NFC1
NFC2
GND
¿¿½üÐ¾Æ¬·ÅÖÃ
C7308
RXN
R7302
L7301
TX1
C7305
C7306
L7302
TX2
R7303
C7307
RXP