SAMSUNG CONFIDENTIAL
THIS DOCUMENT CONTAINS CONFIDENTIAL PROPRIETARY INFORMATION THAT IS SAMSUNG ELECTRONICS CO'S PROPERTY. DO NOT DISCLOSE TO OR DUPLICATE FOR OTHERS EXCEPT AS AUTHORIZED BY SAMSUNG.

MAIN ANT

MAIN ANT SWITCH [BGSA133GN10]

MODE	VDD	CTL1	CTL2
RF1	H	L	L
RF2	H	L	H
RF3	H	H	L
Isolation mode	H	H	H

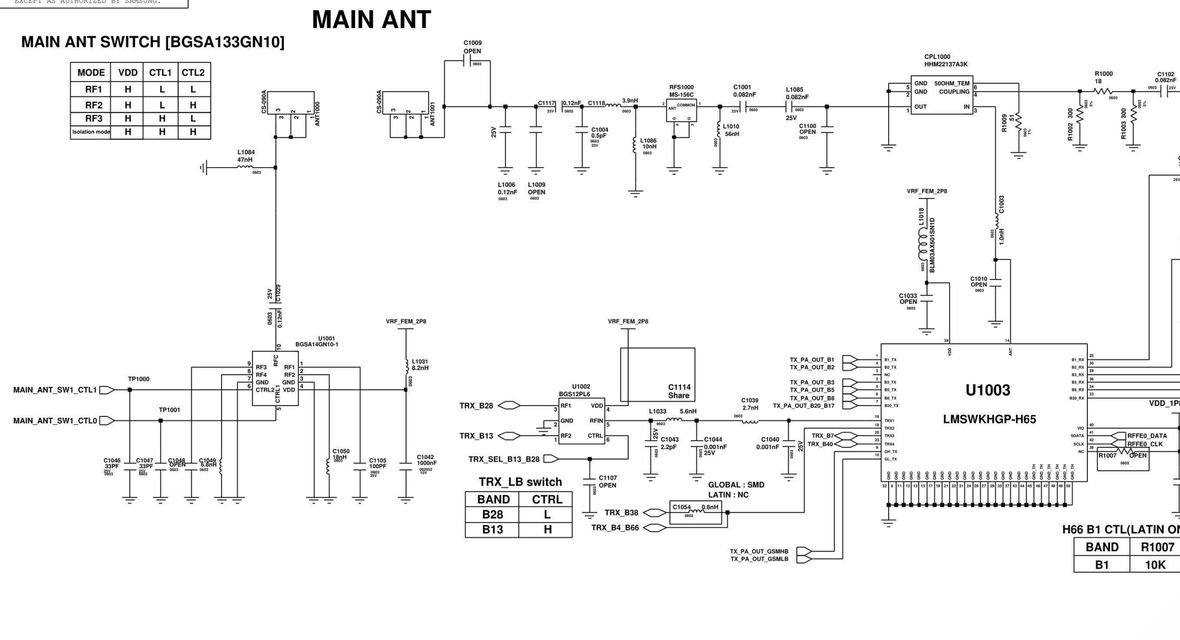

TRX_LB switch

BAND	CTRL
B28	L
B13	H

H66 B1 CTL(LATIN ONLY)

BAND	R1007
B1	10K

MMMB PA

2G : EGSM / DCS / PCS / GSM850
3G : B1 / 2 / 4 / 5 / 8
FDD LTE : B1 / 2 / 3 / 4 / 5 / 8 / 12(17) / 13 / 20 / 28 / 66

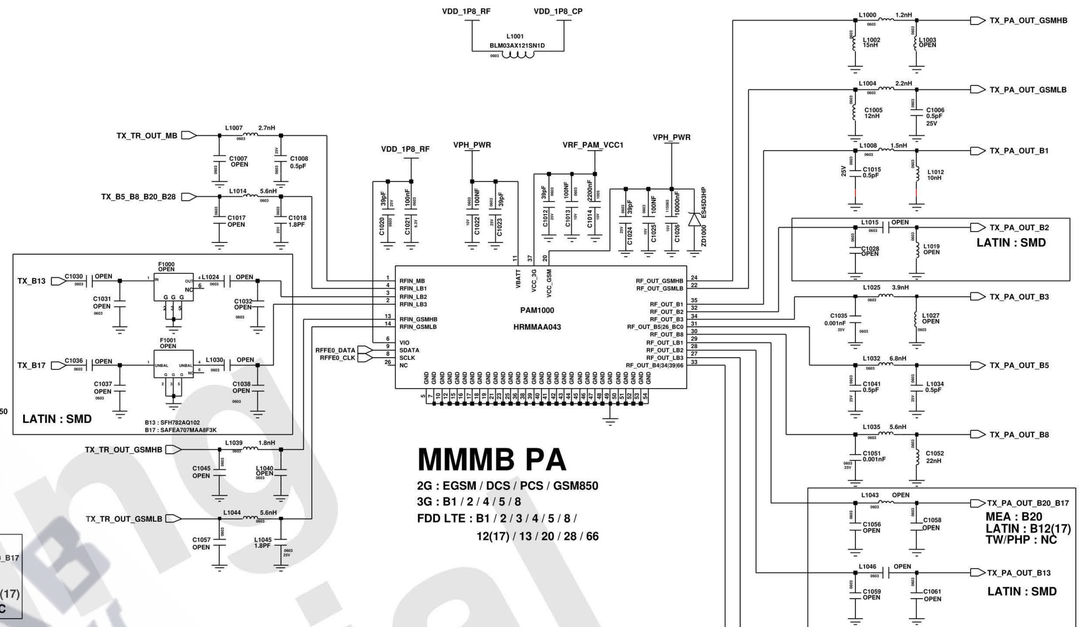

FEMiD

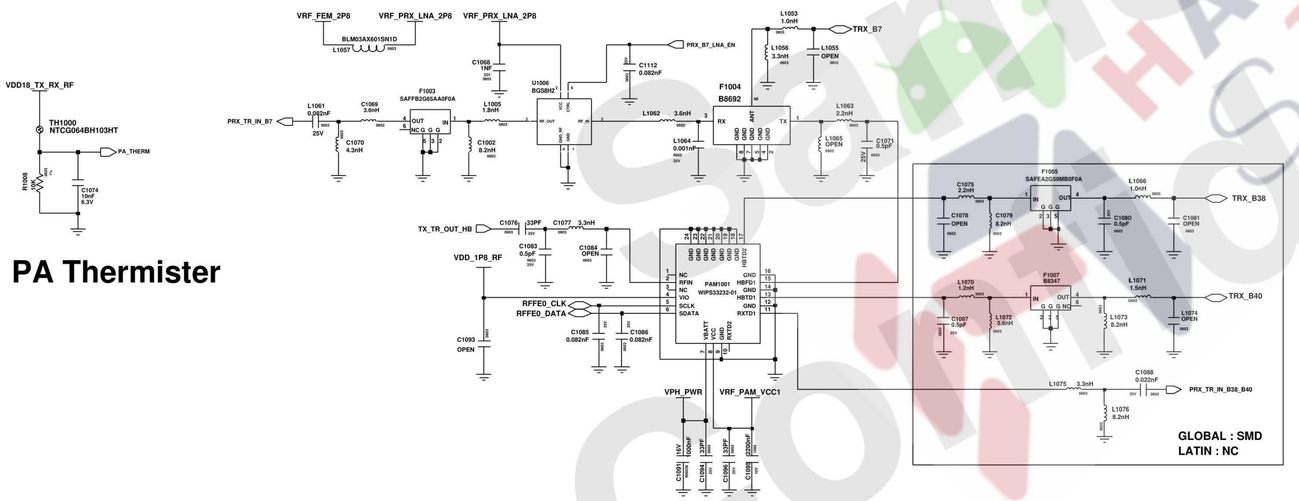

PA Thermister

High band PA

FDD LTE : B7
TDD LTE : B38 / B40

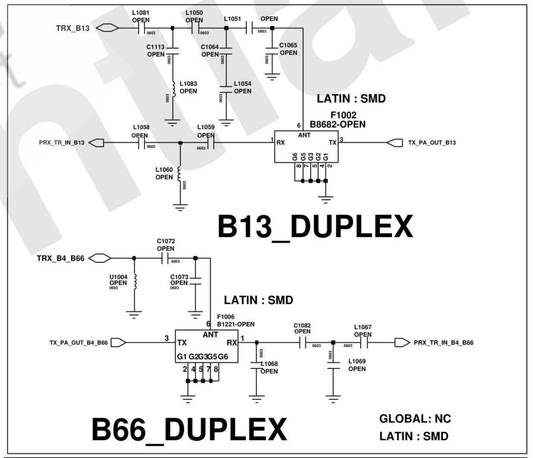

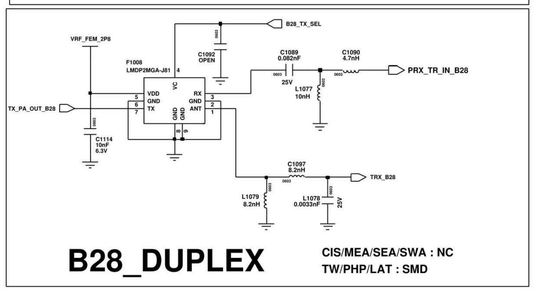

CIS / MEA / SEA / SWA

2G - EGSM / DCS / GSM850
3G - W1 / W5 / W8
LTE - B1 / B3 / B5 / B7 / B8 / B20 / B38 / B40

TW / PHP

2G - EGSM / DCS / GSM850
3G - W1 / W5 / W8
LTE - B1 / B3 / B5 / B7 / B8 / B28 / B38 / B40

LATIN

2G - EGSM / DCS / GSM850 / PCS
3G - W1 / W2 / W4 / W5 / W8
LTE - B1 / B2 / B3 / B4 / B5 / B7 / B8 / B12(17) / B13 / B28 / B66

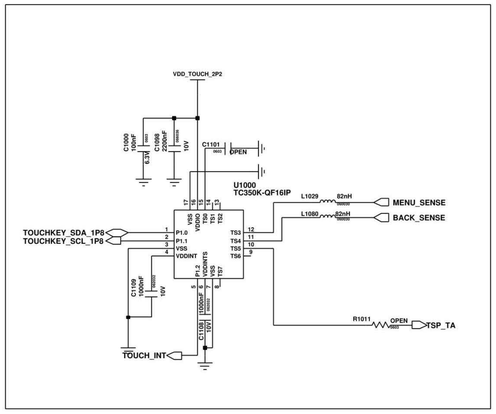

TOUCH_KEY

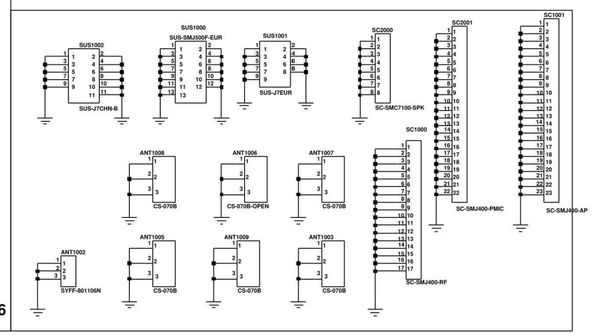

TX_TR_LB

GLOBAL : (1) NC (2) SMD
LATIN : (1) SMD (2) NC

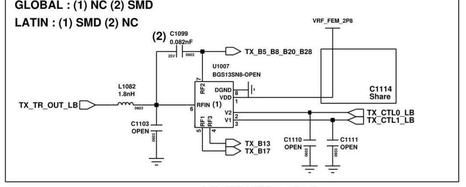

LB TR TX switch

BAND	CTL0	CLT1
B5/B8/B20/B28	H	L
B13	H	H
B12(17)	L	H

Engineer: R&D TEAM - KOREA	SAMSUNG ELECTRONICS
Drawn by: R&D TEAM - KOREA	
R&D CHK:	TITLE: 2018_J4_Main RF
DOC CTRL CHK:	SIZE: A1
MFG ENGR CHK:	16 1 12 A
QA CHK:	REV: Drawing Number: Page: 1

Changed by: user93 | Date Changed: Friday, April 11, 2014 | Time Changed: 11:27:01 am

SAMSUNG CONFIDENTIAL
THIS DOCUMENT CONTAINS CONFIDENTIAL PROPRIETARY INFORMATION THAT IS SAMSUNG ELECTRONICS CO'S PROPERTY. DO NOT DISCLOSE TO OR DUPLICATE FOR OTHERS EXCEPT AS AUTHORIZED BY SAMSUNG.

Diversity

Div. Ant. Switch [BGSA14GN10-1]

MODE	CTRL1	CTRL2
RF1	H	L
RF2	L	H
RF3	H	H
ISOLATION	L	L

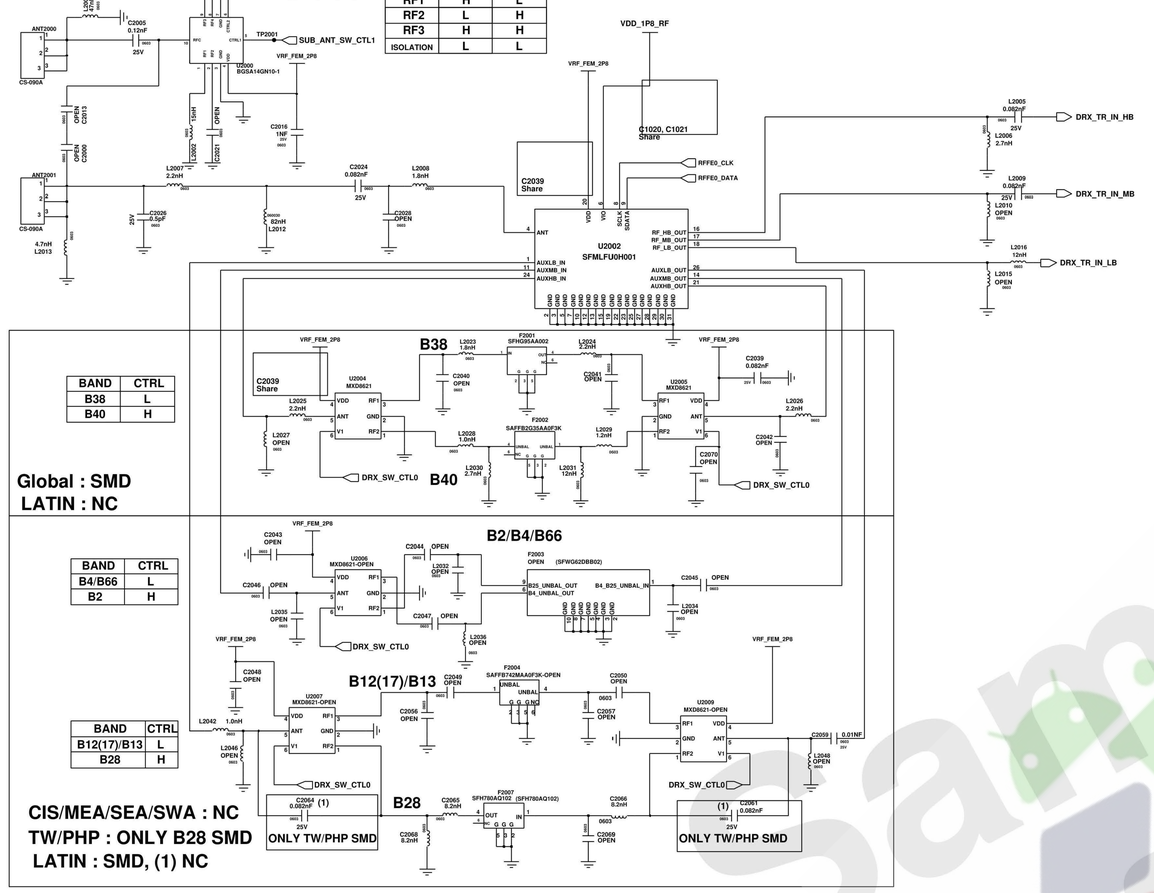

BAND	CTRL
B38	L
B40	H

BAND	CTRL
B4/B66	L
B2	H

BAND	CTRL
B12(17)/B13	L
B28	H

BT/WIFI/FM

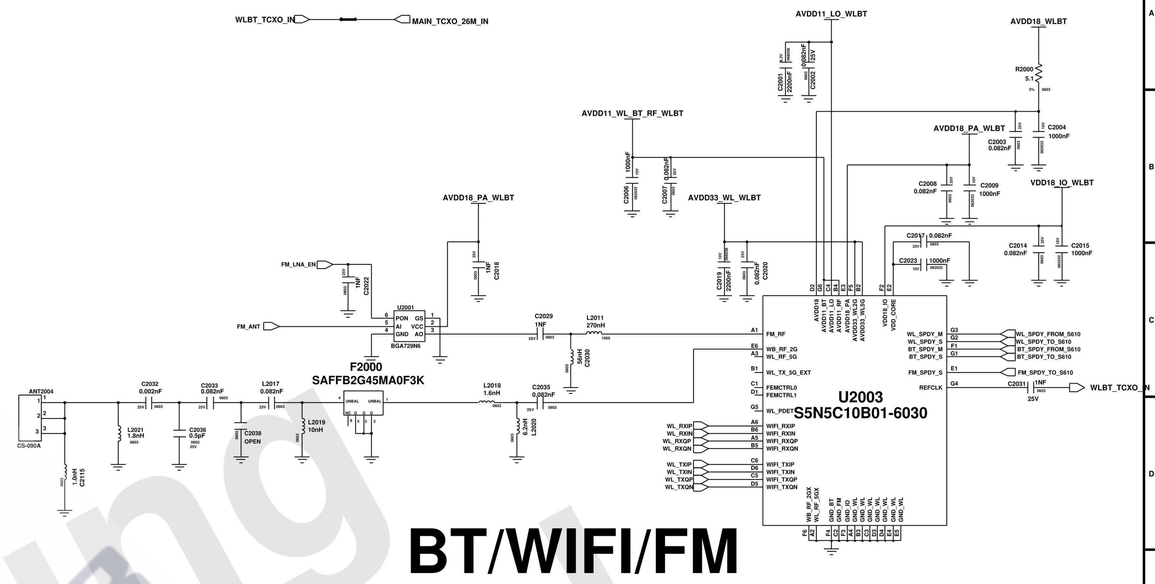

GNSS

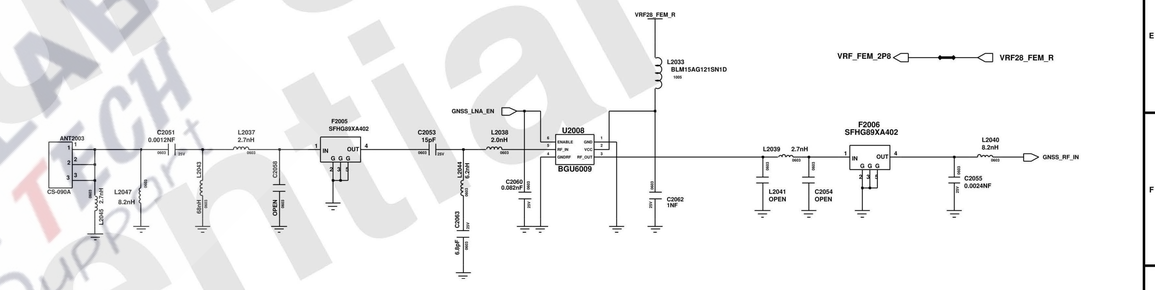

TRCV

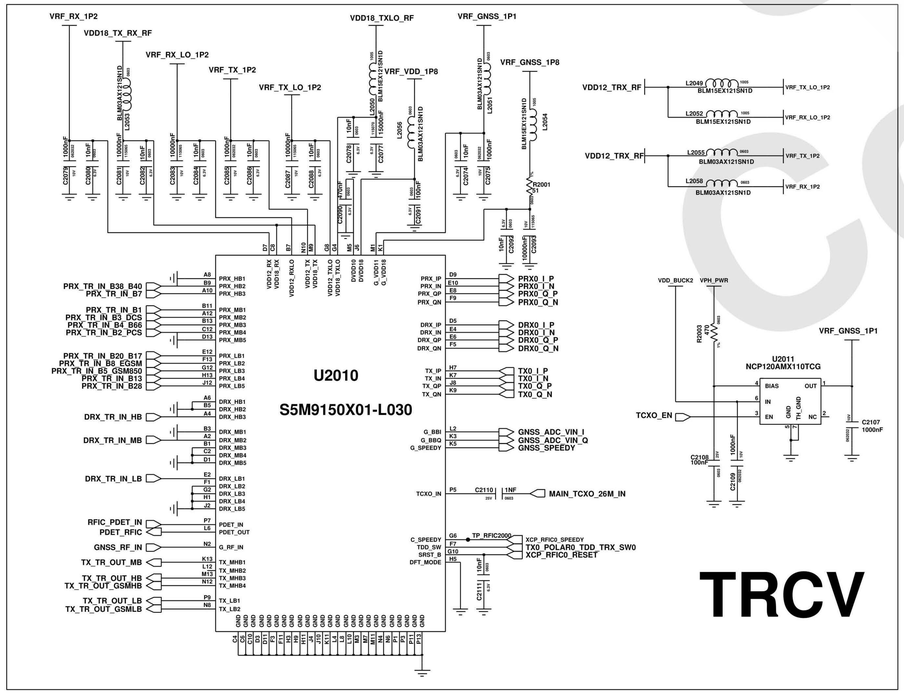

Engineer: R&D TEAM - KOREA	SAMSUNG ELECTRONICS		
Drawn by: R&D TEAM - KOREA			
R&D CHK:	TITLE: 2018_J4_RFIC, Diversity	Size: A1	16 1 12 A
DOC CTRL CHK:			
MFG ENGR CHK:			
QA CHK:	REV:	Drawing Number:	Page: 1

Changed by: user93 | Date Changed: Friday, April 11, 2014 | Time Changed: 11:27:01 am

Samsung Confidential
SAMSLAB HALAL TECH Support

SAMSUNG CONFIDENTIAL
THIS DOCUMENT CONTAINS CONFIDENTIAL PROPRIETARY INFORMATION THAT IS SAMSUNG ELECTRONICS CO'S PROPERTY. DO NOT DISCLOSE TO OR DUPLICATE FOR OTHERS EXCEPT AS AUTHORIZED BY SAMSUNG.

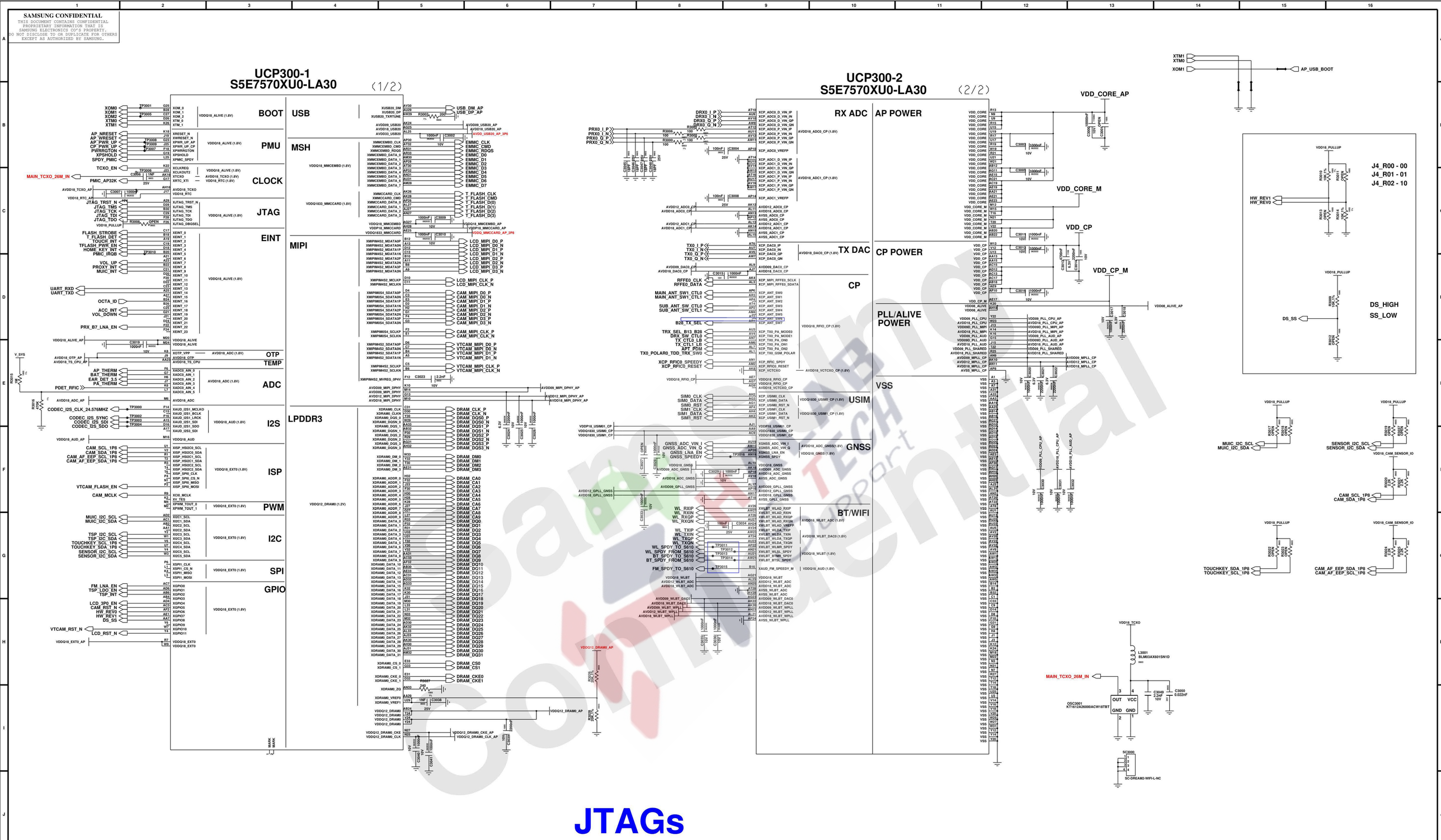

JTAGs

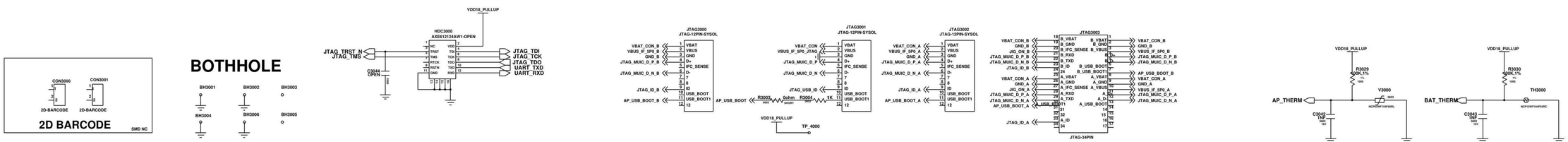

SAMSUNG CONFIDENTIAL
THIS DOCUMENT CONTAINS CONFIDENTIAL PROPRIETARY INFORMATION THAT IS SAMSUNG ELECTRONICS CO'S PROPERTY. DO NOT DISCLOSE TO OR DUPLICATE FOR OTHERS EXCEPT AS AUTHORIZED BY SAMSUNG.

PMIC PART

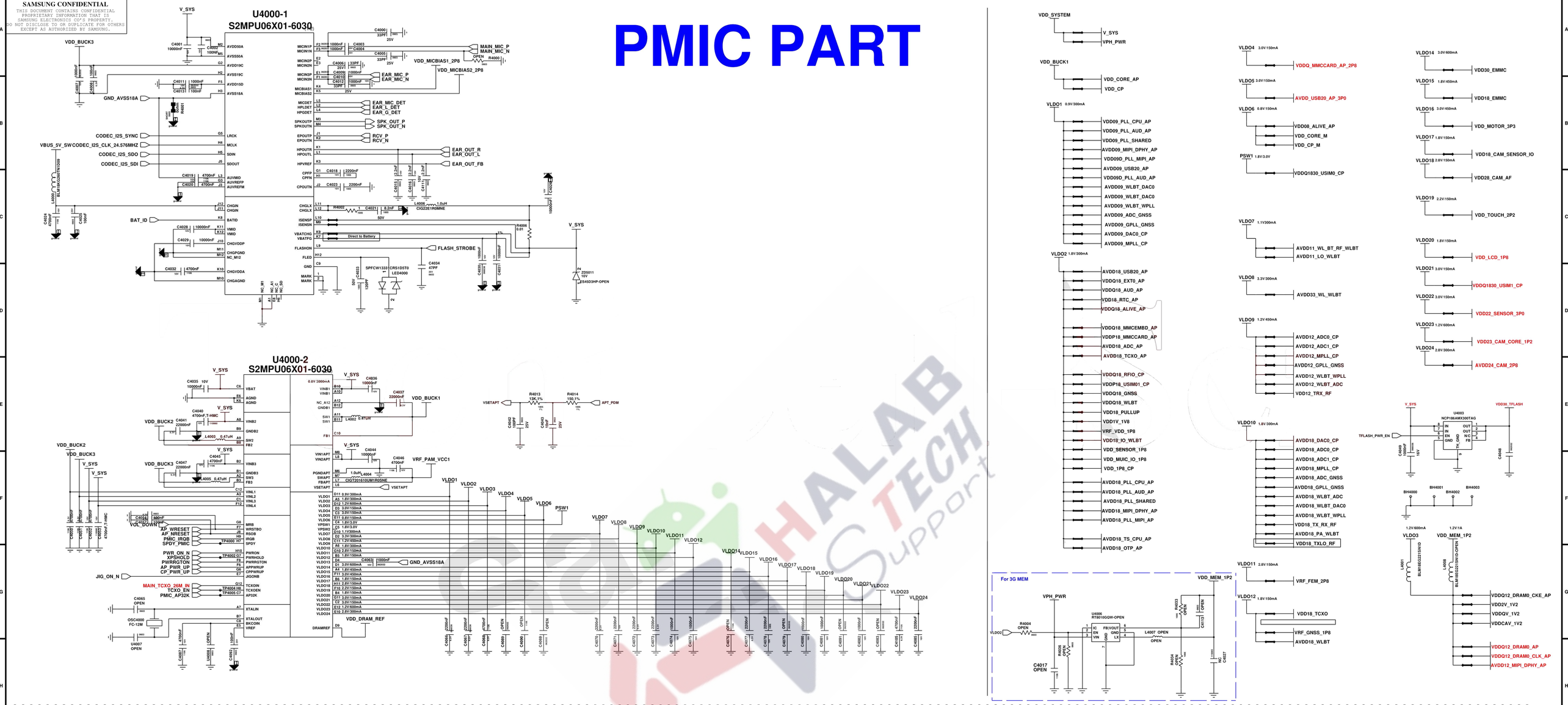

SIM / SD CARD PART

USER INTERFACE PART

(FROM G532F)

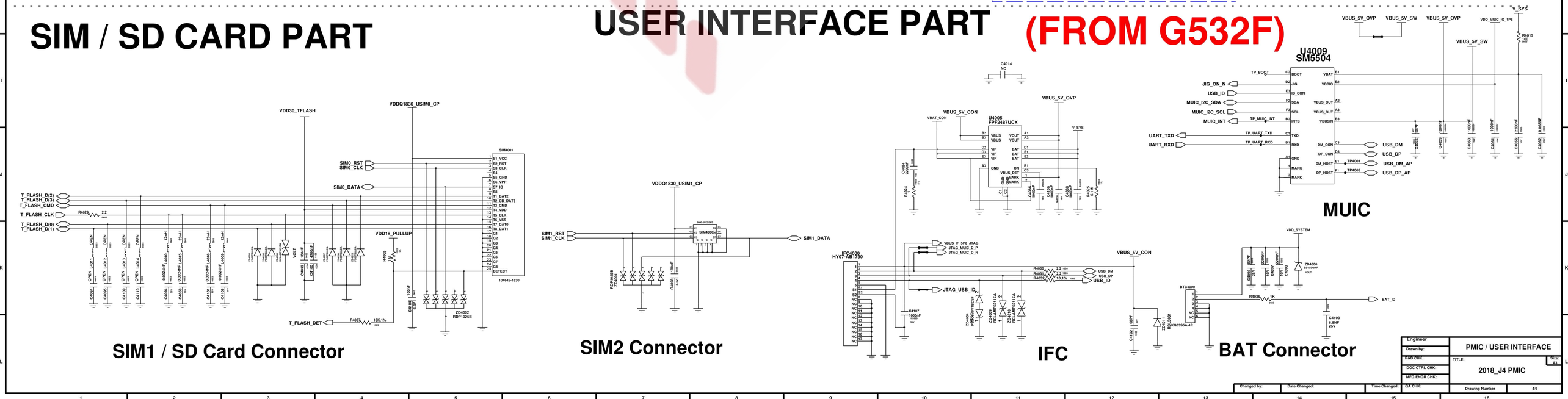

Engineer	PMIC / USER INTERFACE
Drawn by:	
R&D CHK:	TITLE: 2018_J4 PMIC
DOC CTRL CHK:	Size: A3
MFG ENGR CHK:	
QA CHK:	Drawing Number: 4/6

Changed by: | Date Changed: | Time Changed:

SAMSUNG CONFIDENTIAL
THIS DOCUMENT CONTAINS CONFIDENTIAL PROPRIETARY INFORMATION THAT IS SAMSUNG ELECTRONICS CO'S PROPERTY. DO NOT DISCLOSE TO OR DUPLICATE FOR OTHERS EXCEPT AS AUTHORIZED BY SAMSUNG.

AUDIO PART (FROM : G532F)

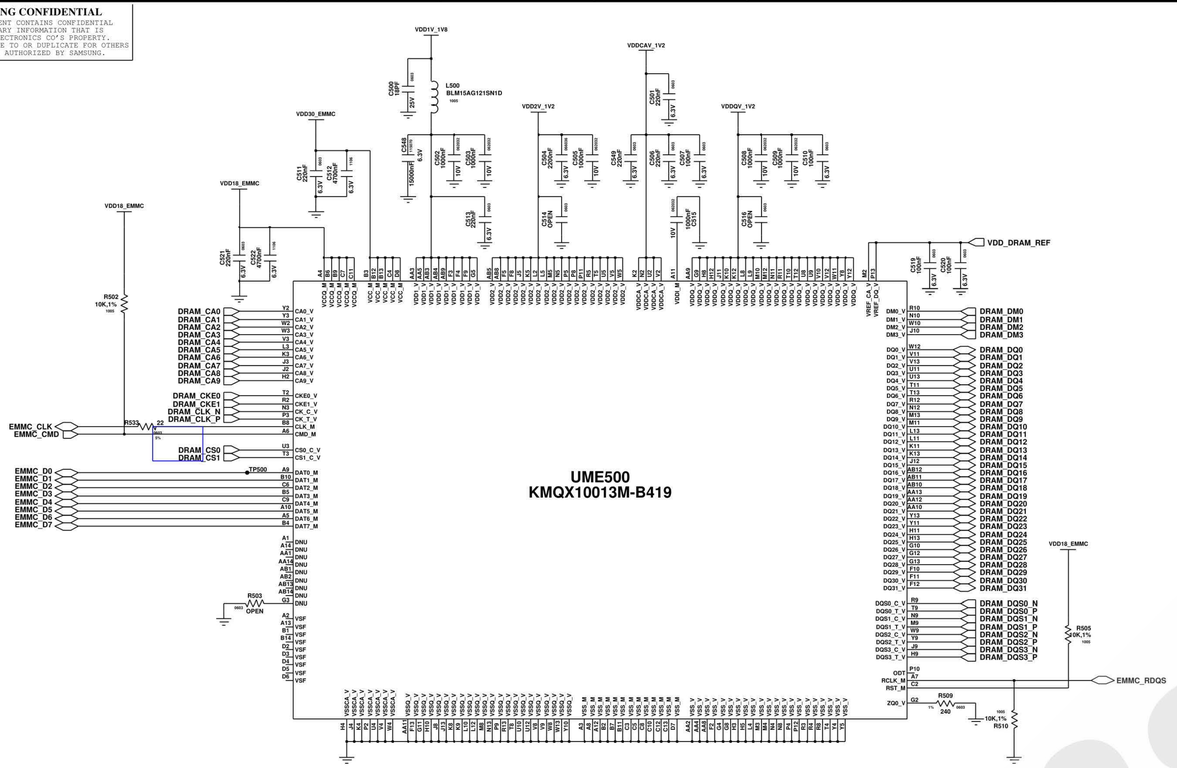

MEMORY

MEMORY(32GB eMMC + 2GB LPDDR3)

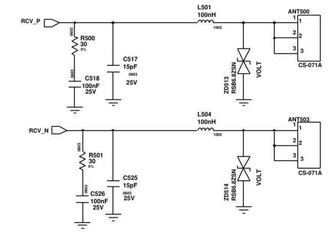

Receiver Contact

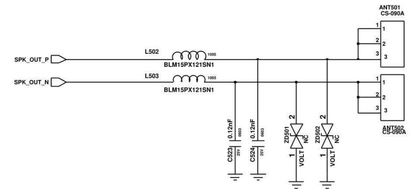

SPEAKER

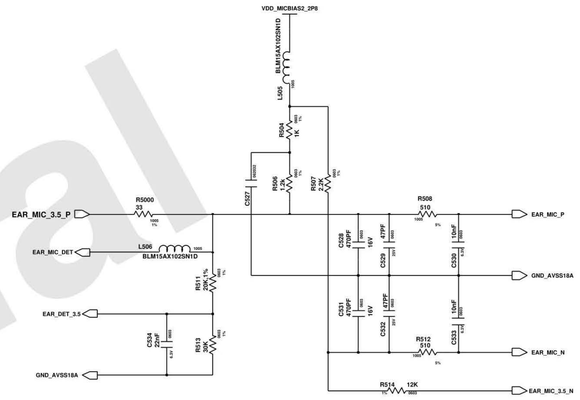

Ear MIC

EARJACK

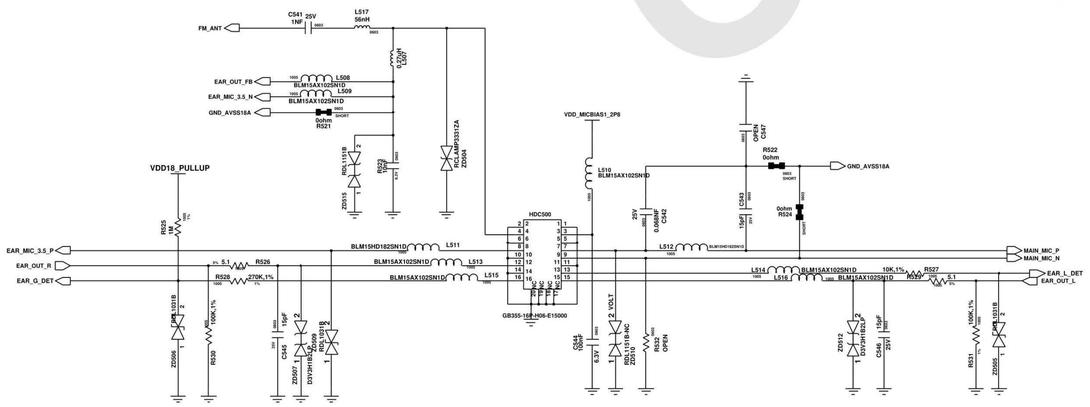

Engineer	AUDIO / MEMORY
Drawn by:	
R&D CHK:	TITLE: 2018_J4_AUDIO
DOC CTRL CHK:	Size: A
MFG ENGR CHK:	
QA CHK:	Drawing Number: 5/6

Changed by: | Date Changed: | Time Changed:

SAMSUNG CONFIDENTIAL
THIS DOCUMENT CONTAINS CONFIDENTIAL PROPRIETARY INFORMATION THAT IS SAMSUNG ELECTRONICS CO'S PROPERTY. DO NOT DISCLOSE TO OR DUPLICATE FOR OTHERS EXCEPT AS AUTHORIZED BY SAMSUNG.

CAMERA PART_from (J330F)

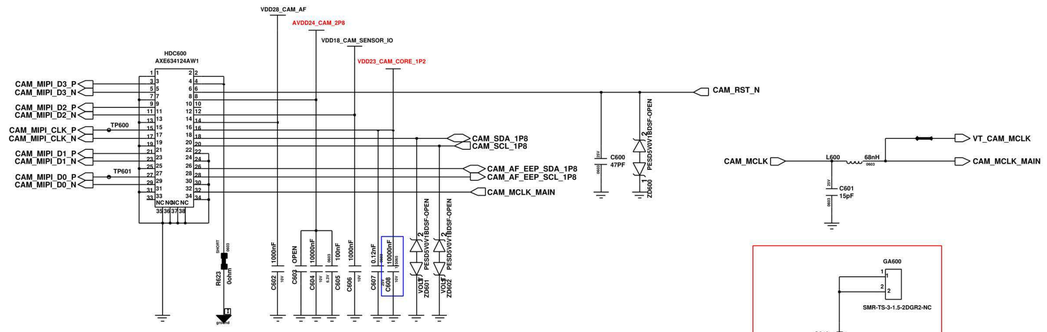

13M_CAM Connector (MIPI)

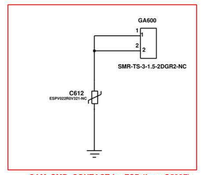

CAM_SMD_CONTACT for ESD (from G532F)

5M_VT_CAM FROM J330F

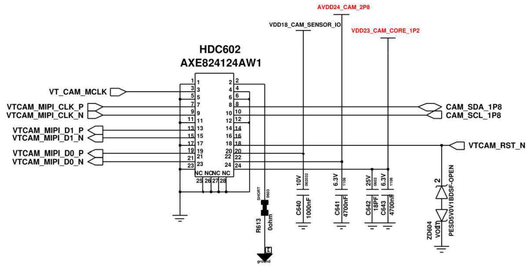

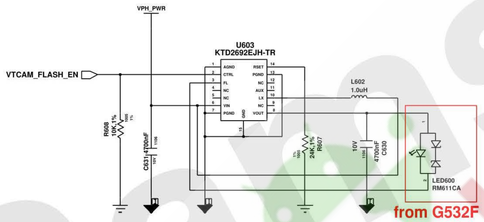

FrontCAM_FLASH from J3

from G532F

DISPLAY PART_From(J7 DUO)

HD 5.5" OCTA

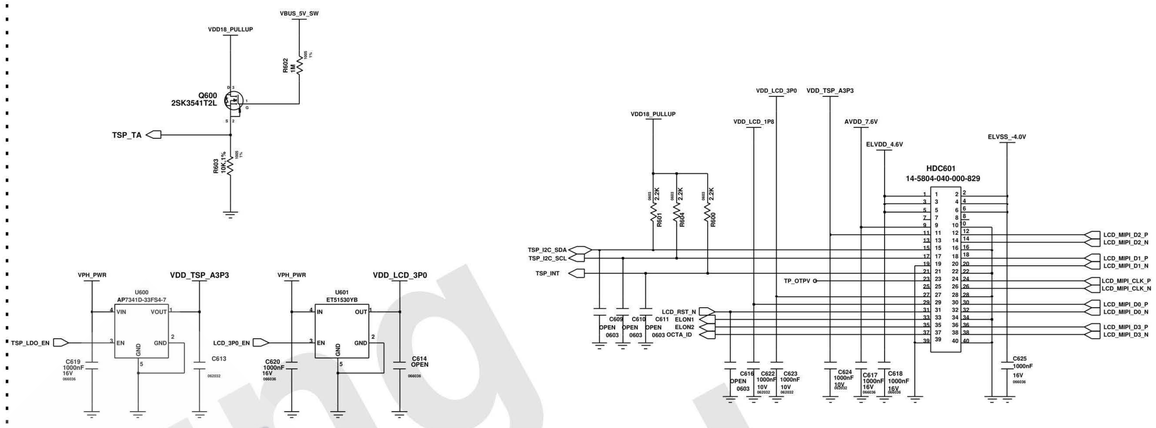

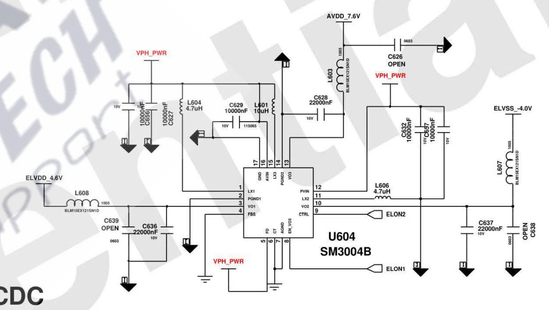

OCTA DCDC

from J7 DUO

Proxi Sensor

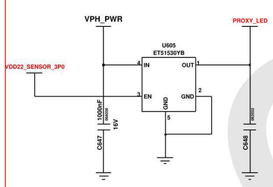

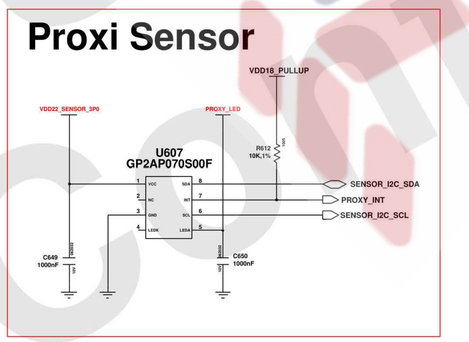

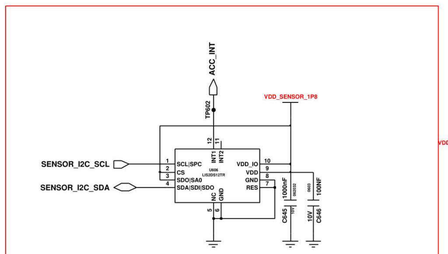

Accel. Sensor

Touch Key CON

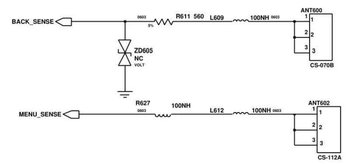

HOME KEY

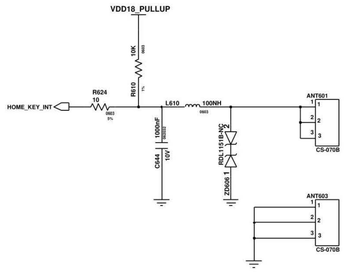

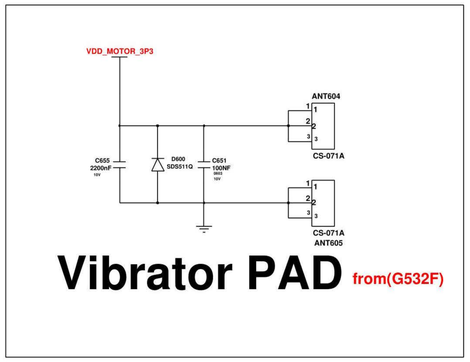

Vibrator PAD from(G532F)

REGION		MEMORY
R614 0ohm	F MEA/CIS/SEA	R609 0ohm 2+16
R615 0ohm	L Latin	R606 0ohm 2+32
R619 0ohm	G TAIWAN	R605 0ohm 3+32
R620 0ohm	D Dual Sim	
R621 0ohm	S Single Sim	

KEYS_from(G532F)

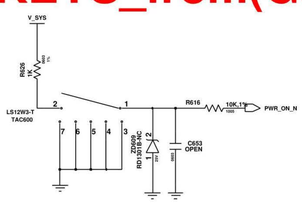

Power_ON

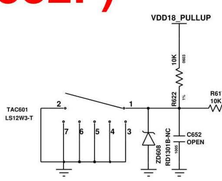

VOL_UP

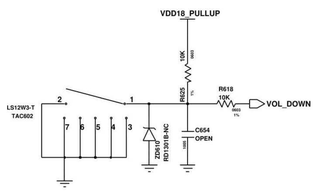

VOL_DOWN

Engineer:	CAMERA / LCD / CONNECTOR
Drawn by:	
R&D CHK:	TITLE:
DOC CTRL CHK:	2018_J4
MFG ENGR CHK:	Size: A3
QA CHK:	REV: Drawing Number: 6/6

Changed by: | Date Changed: | Time Changed:

Samsung Confidential