REVISIONS			
REV.	DESCRIPTION	DATE	APPROVED
X1	AS ISSUED		

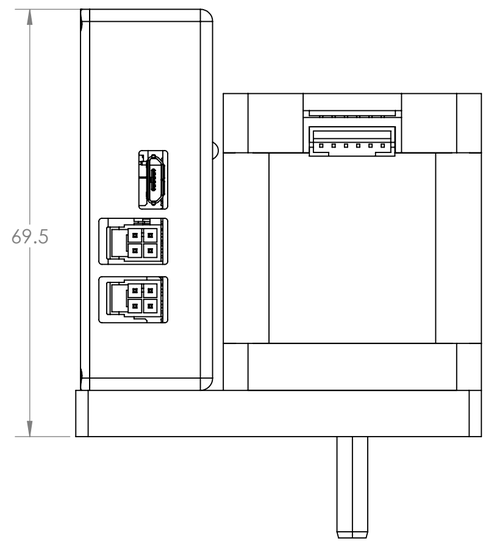

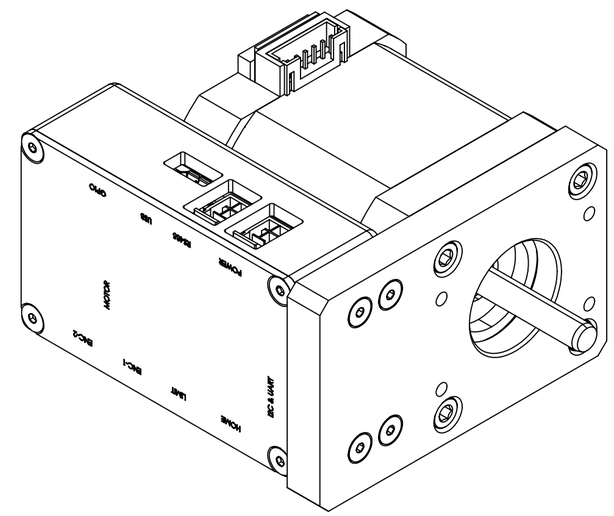

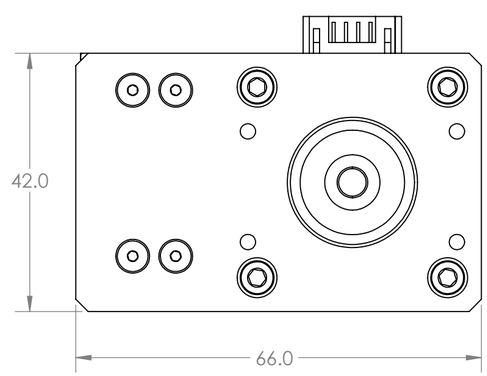

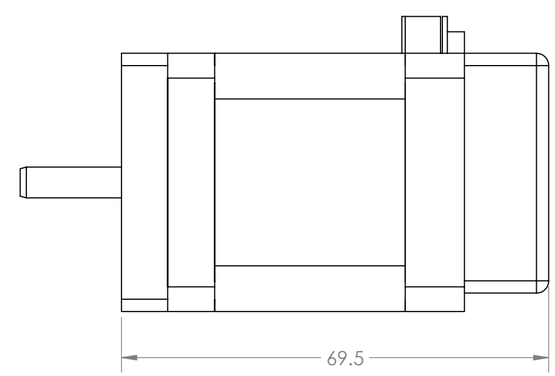

NOTES: UNLESS OTHERWISE SPECIFIED.

1. △1 PERMANENTLY MARK WITH VENTURE PART NUMBER AND REVISION APPROX WHERE SHOWN.
2. DIMENSIONS APPLY AFTER ASSEMBLY
3. INSTALL PER MANUFACTURER'S SPECIFICATIONS
4. 3D CAD MODELS ARE SUPPLIED FOR REFERENCE ONLY.
5. ◆# INDICATES CRITICAL TO FUNCTION DIMENSION AND DESIGNATOR NUMBER.
6. RoHS COMPLIANT TO 2011/65/EU AND AMENDMENTS.
7. ⬡ INDICATES A REVISION CHANGE.

3D MODEL REV AND CAD FILE NAME

X1	PRECISION MOTION ACTUATOR, NEMA-17

INTERPRET DRAWING PER ASME Y 14.5 - 2009

THIRD ANGLE PROJECTION

MATERIAL --

FINISH --

UNLESS OTHERWISE SPECIFIED:
DIMENSIONS ARE IN MILLIMETERS
INTERPRET SHEET PER ASME Y14.5-2009
DIMENSIONS APPLY TO FINAL DELIVERED PARTS

ALL UNTOLERANCED SURFACES: ⌓ | 1 | A | B | C

ALL UNTOLERANCED ANGLES: ± 1 °

ALL UNTOLERANCED TORQUES: 6 %

DO NOT SCALE DRAWING

APPROVALS	DATE
DRAWN SHIVA	mm/dd/yy
CHECKED --	mm/dd/yy
ENG --	mm/dd/yy
MFG ENG --	mm/dd/yy
QUAL ENG --	mm/dd/yy

VENTURE

PART DESCRIPTION: PRECISION MOTION ACTUATOR, NEMA-17

SIZE C | PART NO. VMA1017 | DWG REV. X1

SCALE 1:1 | CAD FILE PRECISION MOTION ACTUATOR, NEMA-17 | SHEET 1 OF 1