Smoke-Technologies AG



MANUAL

Operating Instructions for Smoke Control System SC-9000

E&B Räuchertechnologien AG Weinfelderstrasse 8 CH-8575 Bürglen Telefon +41(0)71/634 60 50 Fax. +41(0)71/634 60 55 Internet: http://www.ebsmoke.com

INDEX MANUAL

OPERATING INSTRUCTIONS FOR FOR SMOKE CONTROL SYSTEM SC-9000

1. OPERATION OF THE SC-9000 - QUICK REFERANCE WITHOUT PIC/CIRCUITBOARD 5

1.1 PROGRAMMING 5
1.2 STARTING A PROGRAM 5
1.3 READING A PROGRAM 5
1.4 "STOP" IN CURRENT PROGRAM FOR 2 MINUTES 5
1.5 CHANGING OF REMAINING TIME IN CURRENT PROGRAM 5
1.6 "STOP" IN CURRENT PROGRAM 6
1.7 "READ A PROGRAM" IN CURRENT PROGRAM 6
1.8 ENTER SERVICE VARIABLES 6
1.9 INDIVIDUAL RELAY TEST 6

2. SERVICE "SC-9000" 7

2.1 SERVICE VARIABLES 7
2.1.1 VARIABLE 01 HUMIDIFICATION 7
2.1.2 VARIABLE 02 DE-HUMIDIFICATION 8
2.1.3 VARIABLE 03 HORN 8
2.1.4 VARIABLE 04 MATERIAL FEED AT SMOKE GENERATOR 8
2.1.5 VARIABLE 05 CORE TEMPERATURE ACTUAL VALUE ON/OFF 8
2.1.6 VARIABLE 06 HEATING POWER REDUCTION 9
2.1.7 VARIABLE 07 HUMIDIFICATION STEP 9
2.1.8 VARIABLE 08 ADDITIONAL IGNITION SMOKE GENERATOR 9
2.1.9 VARIABLE 09 REDUCTION SHOWER 9

2.1.10 VARIABLE 10 INTERVAL-CLEANING PROCESS 10
2.1.11 VARIABLE 11 TEST PROGRAM 10
2.1.12 VARIABLE 12 TEMPERATURE SUPERVISION ON/OFF 10
2.1.13 VARIABLE 13 IMPULSE CONTROLLER-HEATING A 10
2.1.14 VARIABLE 14 IMPULSE CONTROLLER-HEATING B 11
2.1.15 VARIABLE 15 MINIMUM ON/OFF TIMES FOR HEATING WITH OIL-AND GAS BURNERS 11
2.1.16 VARIABLE 16 NUMBER OF FEEDER TURNS DURING PRE-IGNITION AT SMOKE GENERATOR 11
2.1.17 VARIABLE 17 GLYCOL CONTROLLER ON/ON 11
2.1.18 VARIABLE 18 ADJUSTMENT OF GLYCOL REGULATOR ACC. TO INPUT TEMPERATURE 12
2.1.19 VARIABLE 19 GLYCOL CONTROLLER REACTION TIME-RETARDATION 12
2.1.20 VARIABLE 20 GLYCOL TEMPERATURE SUPERVISION 12
2.1.21 VARIABLE 21 ENTHALPY CONTROLLER ON/OFF 13
2.1.22 VARIABLE 22 ENTHALPY CONTROLLER-HYSTERESIS TEMPERATURE 13
2.1.23 VARIABLE 23 ENTHALPY CONTROLLER-PROPORTIONAL BAND-TEMPERATURE 13
2.1.24 VARIABLE 24 ENTHALPY CONTROLLER-HYSTERESIS HUMIDITY 14
2.1.25 VARIABLE 25 ENTHALPY CONTROLLER-PROPORTIONAL BAND-HUMIDITY 14
2.1.26 VARIABLE 26 ADDITIONAL CORE TEMPERATURE PROBES ON/OFF 14
2.1.27 VARIABLE 27 TEMPERATURE INDICATION IN °C (CELSIUS)/°F (FAHRENHEIT) ON/OFF 14
2.1.28 VARIABLE 28 INDICATION/INPUT OF TROLLEY NUMBER ON/OFF 15
2.1.29 VARIABLE 29 ADVANCE TIME FOR SECOND CORE TEMPERATURE PROBE 15
2.1.30 VARIABLE 30 HUMIDITY SUPERVISION ON/OFF 15
2.1.31 VARIABLE 31 INDICATION OF ACTAUAL HUMIDITY VALUE ON/OFF 15
2.1.32 VARIABLE 32 DELTA-T FOR (EXTERNAL) FRESH AIR COOLING 15
2.1.33 VARIABLE 33 MAXIMUM TEMPERATURE FOR (EXTERNAL) FRESH AIR COOLING 16
2.1.34 VARIABLE 34 P-PART FOR PI REGULATOR-HEATING 16
2.1.35 VARIABLE 35 I-PART FOR PI REGULATOR-HEATING 16
2.1.36 VARIABLE 36 INDICATION OF DEGREE/HOURS-VALUE ON/OFF 16

3. SERVICE PROGRAM 17

3.1 EXAMINATION INDIVIDUALLY 17
3.2 EXAMINATION AUTOMATICALLY 17

4. ERROR CODES - THEIR SIGNIFICANCE AND CORRESPONDING ELIMINATION 18

4.1 RAM - ERROR 18
4.2 RESTART ERROR 18
4.3 PROBE ERROR 19

4.4 IGNITION ERROR 19
4.5 ERROR 5 20
4.6 DEFECTIVE TIMER 20
4.7 TEMPERATURE SUPERVISION 20
4.8 CHECK - SUM OF DIGITS-ERROR 21
4.9 SERVICE VARIABLES 21
4.10 FEEDING ADVANCE-ERROR/MATERIAL IN SMOKE GENERATOR 21
4.11 GLYCOL-TEMP. ALARM 22
4.12 OPTO 1 22
4.13 OPTO 2 23
4.14 OPTO 3 23
4.15 OPTO 4 24
4.16 OPTO 5 24
4.17 OPTO 6 25
4.18 OPTO 7 25
4.19 OPTO 8 26

5. SPECIAL ERRORS WHICH INDEED SHOW ONE OF THE PREVIOUSLY MENTIONED ITEMS BUT CANNOT BE ELIMINATED IN THE DESCRIBED WAY 26

6. INSCRIPTION OF PROGRAM NAMES VIA KEYBOARD ONLY SINCE VERSION V.60 27-28

7. INSTRUCTIONS TO USE EBCOM 29

7.1 DOS - PROGRAM 29
7.1.1 TRANSMISSION CABLE 29
7.1.2 TO LOAD A NEW BOOT-PROGRAM 30
7.1.3 LOADING OF BASIC SOFTWARE 31
7.1.4 TO RECEIVE PROGRAM DATA (TECHNOLOGICAL PROGRAMS, PROGRAMMED BY CUSTOMERS) 31
7.1.5 PLANT TEXTS AS TITELS AND PROGRAM NAMES 32
7.1.6 LOADING OF THE TEXTS 32
7.1.7 FOREIGN LANGUAGE TEXTS 33

8. EBCOM-WINDOWS-PROGRAM 34-35

9. GENERAL MOUNTING INSTRUCTIONS FOR MICROPROCESSORS OF E&B 36

10. MOUNTING INSTRUCTION FOR PROCESSORS OF E&B 37

10.1 SUBJECT: INTERFERENCE ELIMINATION AT SOLENOIDS 37
10.2 TO EQUALIZE TEMPERATURES AT THE SC-2000/SC-9000 38
10.2.1 MATERIAL 38
10.2.2 DESCRIPTION OF HOW TO ADJUST THE POTENTIOMETERS 38
10.2.3 DESCRIPTION OF POSITIONING 38
10.2.4 DEFINITIVE ADJUSTMENT OF HUMIDITY IN REL. HUM. IN % 39
10.2.5 RECOMMANDED OPERATION STEPS 39
10.2.5.1 ADJUSTMENT OF THE OPERATING TEMPERATURE 39
10.2.5.2 ADJUSTMENT OF THE HUMIDITY TEMPERATURE 39
10.2.5.3 ADJUSTMENT OF THE CORE TEMPERATURE 39
10.2.5.4 FINAL ADJUSTMENT OF RELATIVE HUMIDITY 40

11. ADJUSTMENT OF THE TEMPERATURES AT THE SC-9000 WITH THE LARGE RELAY BOARD 40

12. DESCRIPTION OF THE OPTOCOUPLER OCCUPATIONS AT THE SC-9000 40

1. QUICK REFERANCE SC-9000 (WITHOUT PIC/CIRCUIT BOARD)

1.1 PROGRAMMING:

[C] "LOGIN" – Enter program number - [C] - [C] - Step number - □ - Process code - □ - Values + □ - [A] "NEXT STEP" or [B] "END"

Input for single step control systems:
At the last position of a step (under the symbol"→") appears a 0. In case that the program – after having finished this step – shall interrupt the whole program performance write an 1, in order to activate the single step control system. When programming this way the plant – after having finished this step – stops and waits for somebody to press the key A to start the next step or the key B to stop the program.

The programmed program position appears as „occupied". You can directly enter the next program.

1.2 STARTING A PROGRAM:

[C] "LOGIN" – Enter program number [B] ev. Number of Step [A] "START" – ev. advance time + □ [A] "START"

1.3 READING A PROGRAM:

[C] "LOGIN" – Enter program number [B] "PROGRAM SURVEY" [D] "NEXT SCREEN" [E] - [E] "RETURN" to NORMAL POSITION

1.4 „STOP" IN CURRENT PROGRAM FOR 2 MINUTES:

[B] "2 MINUTES PAUSE" – ev. Start sooner [A] "START"

1.5 CHANGING OF REMAINING TIME IN CURRENT PROGRAM:

[D] "REMAINING TIME" - enter time - □ [A] "START"

1.6 „STOP" IN CURRENT PROGRAM:

[C] "LOGIN" - [A] "END PROGRAM"

1.7 „READ A PROGRAM“ IN THE CURRENT PROGRAM:

[C] "LOGIN" – ENTER PROGRAM NUMBER- [B] - “PROGRAM SURVEY" - [E] - [E] – "RETURN"

1.8 ENTER SERVICE VARIABLES:

[C] "LOGIN" - [C] "PROGRAMMING" - [A] "EDIT VARIABLES" – select variable number - □ - enter value - □ -
[A] "NEXT" or select variable number - etc.

1.9 INDIVIDAL RELAY TEST:

[C] "LOGIN" - [C] "PROGRAMMING" - [B] "SERVICE PROGRAM" -[1] - □ - [A] "START" - select relay number - [A] "START" -
[B] "STOP" etc. - [C] "NEXT" - [A] "START" - [B] "STOP" etc. - [C] "NEXT" etc.

2. SERVICE „SC-9000“

2.1 SERVICE VARIABLES

The control system has different service programs with which some of the variables can be determined. These variables are described below.

The setting of the values is carried out exclusively by our service personnel. Before a user changes a value, we recommend that he contacts us E&B. However, it is important that the operator has a certaine knowledgement of these possibilities. Since the variables have to be set again in some cases of breakdowns.

The calling up, of this program is realized from the normal position as follows:
Following keys are pressed one after another (identify)**-"C"-**(programming)**-"C"-**(change variables)**-"A"**.

In this program, you can select the variables from no. 1-36 choosing a number from the list shown on the display or by calling up the nearest variable with key **"A"**. Confirme with „arrow-key“. The field „value“ shows the adjusted value which can be edited. After having changed the value you have to confirm with the arrow-key. Please, be ware that some of the variables are only optionally available or do only work with a Large Relay Board. Please, discuss this with your supplier.

2.1.1 VARIABLE 01 HUMIDIFICATION

Herewith the opening time of the humidification valve is determined. It is permissible to select a figure between “01” and “99”. The co-ordinated value corresponds to 1/10 of a second per figure.

Therefore is: 99 = 9.9 seconds.

Especially: At combined plants of smoking, cooking and intensive cooling this variable is set to the value 1 second per figure and is used for humidification in the chilling stage.

2.1.2 VARIABLE 02 DE-HUMIDIFICATION

Herewith the opening time of the fresh air- and exhaust flaps during de-humidification is determined. It is permissible to select a figure between "01" and "99". The co-ordinated value corresponds to 1 second per figure.

Therefore is: „99“ = 99 seconds.

2.1.3 VARIABLE 03 HORN

Herewith the duration of the horn signal at the end of a program is determined. It is permissible to select a figure between "01" and "99". The coordinated value corresponds to 1 second per figure.

Therefore is: "99" = 99 seconds.

Optionally the value is set for minutes.

2.1.4 VARIABLE 04 MATERIAL FEED AT SMOKE GENERATOR

Herewith the time period is determined, during which the drive gear for the smoking material transport is to run. It is permissible to select a figure between "01" and "99". The co-ordinated value corresponds to 1 second per figure.

Therefore is: "99" = 99 seconds.

Please note, feeder should always make a whole turn.

2.1.5 VARIABLE 05 CORE TEMPERATURE-ACTUAL VALUE ON/OFF

Herewith the indcation of the actual value of the core temerature is activated, also if none theoretical value has been programmed.

Therefore is: ”0” = inactive and “1” = active

2.1.6 VARIABLE 06 HEATING POWER REDUCTION

Herewith the duration of the heating cycle with Delta “T”-cooking processes is determined. It is permissible to select a figure between "01" and "10". The co-ordinated value corresponds to ten times the figure in % .

Therefore is: "10" = 100 % .

2.1.7 VARIABLE 07 HUMIDIFICATION STEP

Herewith the opening time of the humidification valve is determined by means of the humidification controller. It is permissible to select a figure between "01" and "10". The co-ordinated value corresponds ten times the figure in % .

Therefore is: "10" = 100 % .

2.1.8 VARIABLE 08 ADDITIONAL IGNITION SMOKE GENERATOR

Herewith the duration of the post-ignition time of the smoke generator is determined. It is permissible to select a figure between "00" and "15". The co-ordinated value corresponds to 1 minute per figure.

Therefore is: "15" = 15 minutes.

2.1.9 VARIABLE 09 REDUCTION SHOWER

Herewith the duration of the shower stage during the cooling process is determined. It is permissible to select a figure between "01" and "10". The co-ordinated value corresponds to ten times the figure in % .

Therefore is: "10" = 100 %.

2.1.10 VARIABLE 10 INTERVAL-CLEARING PROCESS

Herewith is determined how many hours smoking is allowed, until the next cleaning should be carried-out. It is permissible to select a figure between "01" and "99". The co-ordinated value corresponds to 1 hour per figure.

Therefore is: "99" = 99 hours.

2.1.11 VARIABLE 11 TEST PROGRAM

This program is used for a self-test in all extreme situations. The input is realized in days, hours and minutes. During the chosen time, not visible from outside, runs a test which stops the microprocessor after having finished the program. A specific code restarts the system.

ATTENTION:THIS PROGRAM MAY ONLY BE OPERATED BY THE PRODUCER. THE USER BEARS THE RESULT OF AN UNAUTHORIZED START.

2.1.12 VARIABLE 12 TEMPERATURE SUPERVISION ON/OFF

Herewith it is determined whether the temperature supervision shall be active or inactive. It is permissible to select a figure between "0" and "1".

Therefore is: "0" = inactive, "1" = active.

2.1.13 VARIABLE 13 IMPULSE CONTROLLER-HEATING A

Herewith is determined how many degrees centigrades the heating controller A has to start – before the programmed theoretical value – with timing impulse operation. It is permissible to select between a figure “00” and “50”. The co-ordinated value corresponds to 1 degree per figure.

Therefore is: 15" = 15°C.

With Input 00 the interval is swiched off.

2.1.14 VARIABLE 14 IMPULSE CONTROLLER – HEATING B

Herewith is determined how many degrees centigrades the heating controller A has to start – before the programmed theoretical value – with timing imopulse operation. Itg is permissible to select between a figure “00” and “50”. The co-ordinated value corresponds to 1 degree per figure.

Therefore is: 15" = 15°C before teh theoretical value.

With Input of 00 the natural process is switched off.

2.1.15 VARIABLE 15 MINIMUM ON/OFF TIMES FOR HEATING WITH OIL-AND GASBURNERS

Because of the legal Prescriptions and Safety Rules for gas- and oil heatings concerning ventilation of the system before and after operaton, it is nessesary to provide a minimum time for the heating being active or inactive. The desired value is fixed in the program and cannot be changed by the user. However, it is possible to connect or disconnect this modes. It is permissible to select between figure “0” and “1”.

Therefore is: "0" for inactive, "1" for active.

2.1.16 VARIABLE 16 NUMBER OF FEEDER TURNS DURING PRE-IGNITION AT SMOKE GENERATOR

Herewith is determined, how many feeder terms shall be executed at pre-ignition. It is permissible to select between figure “1” and “9”
Therefore is: “1” = ONE feeder term and “9” = NINE feeder terms

2.1.17 VARIABLE 17 GLYCOL CONTROLLER ON/OFF

Herewith is determied wheather the control system shall work with the controller regulator or not. It is permissible to select between a figure “0” and “1”.

Therefore is: “0” = controller inactive and “1” = controller active.

Note: Only possible with the large relay board (32 relays).

2.1.18 VARIABLE 18 ADJUSTMENT OF REGULATOR ACC. TO INPUT TEMPERATURE

Herewith is determined with which DELTA-T-in relation to the room temperature - the input temperature of the glycol circuit should be controlled. It is permissible to select a figure between “1” and “20”.

Example: Set Delta-T=15. If the room temperature is higher than 15°C the theoretical value of the input temperature is 0°C. If the room temperature is adjusted with minus 15°C for the room temperature. The minimum value is fixed with –7°C.

Therefore is: “1”=1°C Delta-T and “20”=20°C Delta-T.

Note: Only possible with the large relay board (32 relays).

2.1.19 VARIABLE 19 GLYCOL CONTROLLER REACTION TIME-RETARDATION

Herewith is determined with how many measurements the position of the mixing valve shall be changed. It is permissible to select between figure “1” and “20”.

Therefore is: “1” = change of position every 6 seconds and “20” = every 120 seconds.

Note: Only possible with the large relay board (32 relays).

2.1.20 VARIABLE 20 GLYCOL TEMPERATURE SUPERVISION

Herewith is determined wheather the temperature supervision of the glycol circuit is active or inactive. It is permissible to select between figure “0” and “1”.

Therfore is: "0" = supervision OFF and “1” = supervision ON.

Note: Only possible with the large relay board (32 relays).

2.1.21 VARIABLE 21 ENTALPHY CONTROLLER ON/OFF

Herewith is determined wheather the control system shall work with the Enthalpy controller or not. It is permissible to select figure between “0” and “1”.

Therefore is: “0” = controler inactive and "1" = controller active.

Note: Only possible with the large relay board (32 relays).

2.1.22 VARIABLE 22 ENTHALPY CONTROLLER HYSTERESIS TEMPERATURE

Herewith is determined from which difference on in relation to the room temperature (actual value) the external air is to be used. It is permissible to select a figure between “0” and “9”.

Therefore is: “0” = 0°C temperatue range and “9” = 9°C temperature range.

Note: Only possible with the large relay board (32 relays).

2.1.23 VARIABLE 23 ENTHALPY CONTROLLER PROPORTIONAL BAND-TEMPERATURE

Herewith is determined up to which difference in relation to the theoretical value of the room temperature the fresh air flap shall be completely opened. It is permissible to select a figure between “0” and “20”.

Therefore is: “0” = 0°C proportional band and “20” = 20°C proportional band.

Note: Only possible with the large relay board (32 relays).

2.1.24 VARIABLE 24 ENTHALPY CONTROLLER HYSTERESIS HUMIDITY

Herewith is determined from which difference on in relation to the humidity (actual value) (external) fresh air shall be applied. It is permissible to select a figure between “0” and “9”.

Therefore is: “0” = 0% humidity band and “9” = 9% humidity vand.

Note: Only possible with the large relay board (32 relays).

2.1.25 VARIABLE 25 ENTHALPY CONTROLLER PROPORTIONAL BAND HUMIDITY

Herewith is determined from which difference in relation to the theoretical value of the humidity the fresh air flap shall be completely opened. It is permissible to select a figure beteeen “0” and “20”.

Therefore is: “0” = 0% proportional band and “20” = 20% probortional band.

Note: Only possible with the large relay board (32 relays).

2.1.26 VARIABLE 26 ADDITIONAL CORE TEMPERATURE PROBES ON/OFF

Herewith is determined whether the control system should work with additional core temperature probes or not. It is permissible to select a figure beteeen "0" and "1".

Therefore is: “0“ = mode OFF and “1“ mode ON

Note: Only possible with the large relay board (32 relays).

2.1.27 VARIABLE 27 TEMPERATURE INDICATION IN °C (CELSIUS)/°F (FAHRENHEIT) ON/OFF

Herewith is determined whether the temperature is indicated in °C or in °F. It is permissible to select a figure between "0" and "1".

Therfore is: “0“= shown in °C and “1“ shown in °F

2.1.28 VARIABLE 28 INDICATION/INPUT OF TROLLEY NUMBER ON/OF

Herewith is determined whether while starting you can enter different trolley numbers. It`s permissible to select a figure between “0“ and “1“.

Therefore is: “0“ = without entering trolley number and “1“ = with entering wagon number.

2.1.29 VARIABLE 29 ADVANCE TIME FOR SECOND CORE TEMPERATURE PROBE

Herewith is determined how long the plant should continue cooking according to a second core temperature probe. It is permissible to select a figure between “1“ and “59“.

Therefore is: "1" = 1 minute extra cooking time and "59" = 59 minutes extra cooking time.

2.1.30 VARIABLE 30 HUMIDITY SUPERVISION ON/OFF

Herewith is determined whether the additional humidity supervision is activ (Time, during which existe more than 90% humidity in the process in % in relation to the total time). It is permissable to select a figure between “0“ and “1“.

Therefore is: "0" = inactive and "1" = active.

2.1.31 VARIABLE 31 INDICATION OF ACTUAL HUMIDITY VALUE ON/OFF

Herewith is determined whether the actual humidity should always be announced. It is permissible to select between "0" and "1".

Therefore is: "0" = indication off and on "1" = indication on.

2.1.32 VARIABLE 32 DELTA-T FOR (EXTERNAL) FRESH AIR COOLING

Herewith is determined up to which atmospheric temperature (core temperature minus Delta T) the (external) air should be applied. It is permissible to select a figure between "0" and "20".

Therefore is: "0" = 0°C Delta T and "20" = 20°C Delta T

2.1.33 VARIABLE 33 MAXIMUM TEMPERATURE FOR (EXTERNAL) FRESH AIR COOLING

Herewith is determined up to which atmospheric temperature fresh air should be applied. It is permissible to select a figure between "0" and "40".

"0" = max. 0°C air temperature and for "40" = max. 40°C air temperature.

2.1.34 VARIABLE 34 P-PART FOR PI REGULATOR - HEATING.

Herewith is determined with which P-part the PI regulator should work. It is permissible to select a figure between "0" and "99".

"0" = no P-part and for "99" = P-part 99.

2.1.35 VARIABLE 35 I-PART FOR PI REGULATOR - HEATING

Herewith is determined with which I-part the PI regulator should work. It is permissible to select a figure between "0" and "99".

"0" = no I-part and "99" = I-Anteil 99.

2.1.36 VARIABLE 36 INDICATION OF DEGREE/HOURS-VALUE ON/OFF.

Herewith is determined whether the degree/hours-value should be announced. It is permissible to select a figure between "0" and "1".

"0" = none indication and "9" = degree/hours-value indication.

3. SERVICE PROGRAM

To start this program from the normal position proceed as follows:

Press following key one after another in sequence - **"C"** (announce) - **"C"** (to program) - **"B"** (service program)

3.1 RELAY EXAMINATION INDIVIDUALLY

Herewith, a specific relay is put at the microprocessor is put into action and in it`s corresponding function at the plant is released and/or tested. It is permissible to select a figure between "01" and "24". Each digit is assigned to a relay output. The assignment is notable on the display

To activate the selected relay press the key (START) **"A"**, desactivation with key (STOP) **"B"**. In order to choose the next relay press key **"C"**. Consequently, the input of a new digit becomes possible. Becaue of safety rules the controller doesn`t permit that two relays can be put simultaneously.
Interval conduct (working cycles) cannot be tested with this program, because the relays are set statically.

3.2 RELAIS EXAMINATION AUTOMATICALLY

Herewith, a program is started, which activates - beginning with relay number 01 - every 2 seconds a next relay.
The start is realized by pressing key (START) **"A"**. The program runs as long as it will be stopped by key (STOP) **"B"**.

ATTENTION: This program may only be started when power supply is disconnected.

4. ERROR CODES - THEIR SIGNIFICANCE AND CORRESPONDING ELIMINATION

4.1 RAM - ERROR

The computer has found changed data in the RAM as a result of a checksum of digits. The program or programs in which the errors were found have been deleted.

Quit error with [E] "QUIT". The SC-9000 returns into its normal position.

Program the program again and re-start it.

If error remains the RAM is defective and has to be replaced.

This has to be done by the service center.

4.2 RESTART ERROR

The microprocessor was not able – in case of a voltage drop – to secure the actual data. Therefore, it could not be restarted at that position where the program had been interrupted.

QUIT ERROR WITH "E".

The SC-9000 returns in normal position.
Program has to be restarted. If possible there, where it was interrupted during the power failure.

SELF CORRECTION

4.3 PROBE ERROR

The temperature probe needed for the measurement has a short circuit. Caused by that, the microprocessor is not able to work and therefore has interrupted the program performance.

QUIT ERROR WITH "E".

The SC-9000 announces the program state in which the mistake has occurred. Moreover, the display shows where the defective probe works, three respectively two small "u" or "c". "u" stands for probe short circuit.
"c" is shown for broken probe.

Provided that the probe error can immediately be repaired, key **"A"** restarts the program or breaks off with **"E"**.

SELF-CORRECTION

4.4 IGNITION ERROR

SC-9000 doesn`t measure at the beginning of the ignition process 220 Volt on terminal 39. Provided that the ignition element (Resistance) is checked in its function is checked by means of a current supervision relay, means that the smoke generator could not ignite. The SC-9000 interrupts the current program.

QUIT ERROR WITH "E".

If needed with some smoke generators a gas burner can also light the smoke material. If this is possible, the smoke program can be started without pre-ignition.

Proceed for this as follows:

1. Call programm-number and quit with. "C"-"B"
2. Select the smoke step with the input of a number.
3. Start program. "A"
4. Call preselection time and confirm with 0. "D"-press twice key "arrow"

EXECUTION IN MOST OF THE CASES BY SERVICE CENTER.

4.5 ERROR 5

The microprocessor has stopped all functions.

QUIT ERROR WITH "E".

SC-9000 is without display.
In the case of attemption to start a program, this error is indicated again.

EXECUTION: BY TELEPHONECALL WITH THE MANUFACTURER AND/OR THE SUPPLIER. THE INPUT OF A SPECIFIC DIGIT STARTS THE COMPUTER AGAIN.

4.6 DEFECTIVE TIMER

The integrated timer is defective. The microprocessor cannot work any more.

QUIT ERROR WITH "E".

EXECUTION: IN MOST OF THE CASES BY SERVICE CENTER.

4.7 TEMPERATURE SUPERVISION

This error is indicated when the actual operating temperature value is 10°C and more (depending on plant, also 5°C is possible) away from the required value and doesn`t approach during the next 4,5 minutes (optionally an other time is possible, too).
Further conditions are: The process has to approve heating and cooling. The process should not be engaged with an interval operation. The process is not engaged with NTH (NO High Temperature Control) or NTL (NO Low Temperature Control), that means, basicly, it can be supervised.

QUIT ERROR WITH "E".

SC-9000 announces the program state in which the errore has occurred.
Provided that the mistake can immediately be eliminated by pressing key **"A"** the program can be restarted or broken off with **"E"**.

EXECUTION: NORMALLY DONE BY YOURSELF WITH THE SUPPORT OF AN ELECTRICIAN, HEATING- OR COOLING SPECIALIST.

4.8 CHECK-SUM OF DIGITS-ERROR

This error happens only if a new configured EPROM is built-in the equipment.

QUIT ERROR WITH "E".

SC-9000 goes returns to normal position.
Reset the service variables with "C" - "C" - "A" from variable 1 to 16.

4.9 SERVICE VARIABLES

When service variables with "C" - "C" - "A" from variables 1 to 16 were not set before the first start, this error happens. It is especially released in case of input lack of variable 4.

QUIT ERROR WITH "E".

SC-9000 returns to normal position.
Reset the service variables with "C" - "C" - "A" from variables 1 to 16.

SELF CORRECTION

4.10 FEEDING ADVANCE-ERROR / MATERIAL IN SMOKE GENERATOR

This error is only announced when the smoke generator works in a closed system and the safety program in the software is activated.
If this error happens, it is shown that the feeding advance and/or the function of material advance doesn`t work correctly. There is no tension at terminal 38 with feeding advance pause.

QUIT ERROR WITH "E".

SC-9000 announces the program state in which the mistake happened.
Provided that the mistake can immediately be eliminated by pressing key "A" the program can be restarted or broken off with “E“.

EXECUTION NORMALLY: IS DONE BY YOURSELF WITH THE SUPPORT OF AN ELECTRICIAN.

4.11 GLYCOL-TEMP. ALARM

This error is announced when the glycol temperature value is not achieved for a longer time than 10 minutes.

QUIT ERROR WITH "E".

SC-9000 announces the program state in which the mistake has occurred.
Provided that the mistake can immediately be eliminated, by pressing key "A" the program can be restarted or broken off with "E".

EXECUTION NORMALLY: IS DONE BY YOURSELF WITH THE SUPPORT OF THE ELECTRICIAN, HEATING- OR COOLING SPECIALIST.

4.12 OPTO 1

This error happens, after having turned on the relay 25, there is no 24V at optocoupler 1 during 5 seconds.

QUIT ERROR WITH "E".

SC-9000 announces the program state in which the mistake has occurred.
Provided that the mistake can immediately be eliminated; by pressing key "A" the program can be restarted or broken off with "E".

EXECUTION NORMALLY: IS DONE BY YOURSELF WITH THE SUPPORT OF THE ELECTRICIAN, HEATING- OR COOLING SPECIALIST.

4.13 OPTO 2

This error is indicated when – after having turned on relay 26 – no tension of 24V on the optocoupler is appllied within 5 seconds.

QUIT ERROR WITH "E".

SC-9000 announces the program state in which the error has occurred.
Provided that the error can be immediately eliminated, restart the program by pushing key "A" or stop it with "E".

NORMALLY, ELIMINATION IS DONE BY YOURSELF WITH THE SUPPORT OF AN ELECTRICIAN, HEATING- OR COOLING SPECIALIST.

4.14 OPTO 3

This error is indicated when – after having turned on relay 27 – no tension of 24V on the optocoupler 3 is applied within 5 seconds.

QUIT ERROR WITH "E".

SC-9000 announces the program state in which the error has occurred.
Provided that the error can be immediately eliminated, restart the program by pushing key "A" or stop it with "E".

NORMALLY ELIMINATION IS DONE BY YOURSELF WITH THE SUPPORT OF AN ELECTRICIAN, HEATING- OR COOLING SPECIALIST.

4.15 OPTO 4

This error is indicated when – after having turned on relay 28 – no tension of 24V on the optocoupler is applied within 5 seconds.

QUIT ERROR WITH "E".

SC-9000 announces the program state in which the error has occurred.
Provided that the error can be immediately eliminated, restart the program by pushing key "A" or stop it with "E".

NORMALLY ELIMINATION IS DONE BY YOURSELF WITH THE SUPPORT OF AN ELECTRICIAN, HEATING- OR COOLING SPECIALIST.

4.16 OPTO 5

This error is indicated when – after having turned on relay 29 – no tension of 24V on the optocoupler is applied within 5 seconds.

QUIT ERROR WITH "E".

SC-9000 announces the program state in which the error has occurred.
Provided that the error can be immediately eliminated, restart the program by pushing key "A" or stop it with "E".

NORMALLY ELIMINATION IS DONE BY YOURSELF WITH THE SUPPORT OF AN ELECTRICIAN, HEATING- OR COOLING SPECIALIST.

4.17 OPTO 6

This error is indicated when – after having turned on relay 30 – no tension of 24V on the optocoupler is applied within 5 seconds.

QUIT ERROR WITH "E".

SC-9000 announces the program state in which the error has occurred.
Provided that the error can be immediately eliminated, restart the program by pushing key "A" or stop it with "E".

NORMALLY ELIMINATION IS DONE BY YOURSELF WITH THE SUPPORT OF AN ELECTRICIAN, HEATING- OR COOLING SPECIALIST.

4.18 OPTO 7

This error is indicated when – after having turned on relay 31 – no tension of 24V on the optocoupler is applied within 5 seconds.

QUIT ERROR WITH "E".If the relays is not switched, and 24V is applied, disconnect immediately the whole processor. Announcement "OPTO 7".

Quit possible errors. Processor is in normal position.

The SC-9000 breaks off the current program and returns into normal position.

NORMALLY ELIMINATION IS DONE BY YOURSELF WITH THE SUPPORT OF AN ELECTRICIAN, HEATING- OR COOLING SPECIALIST.

4.19 OPTO 8

This error is indicated when – after having turned on relay 32 – no tension of 24V on the optocoupler is applied within 5 seconds.

QUIT ERROR WITH "E".

The SC-9000 breaks off the current program and returns into normal position.

NORMALLY ELIMINATION IS DONE BY YOURSELF WITH THE SUPPORT OF AN ELECTRICIAN, HEATING- OR COOLING SPECIALIST.

5. SPECIAL ERRORS WHICH INDEED SHOW ONE OF THE PREVIOUSLY MENTIONED ITEMS, BUT CANNOT BE ELIMINATED IN THE DESCRIBED WAY

If this case should happen, it is a question of an external trouble which disturbs the processor. Such a trouble will probably cause that the processor does not respond to any keyboard manipulation. Also a break-off with “E“ would not be possible. Therefore proceede as follows:

1. SWITCH OFF CONTROL VOLTAGE (master switch or fuse)
2. TURN ON CONTROL VOLTAGE (master switch or fuse)

Herewith, the processor can initiate again and will probably work normally again.

If such an error happens, the manufacturer or the supplier should be informed without fail. It is by all means a question of an external trouble and has to be eliminated. It is mostly released by absence of an RC element or lose terminal clamp.

6. INSCRIPTION OF PROGRAM NAMES WITH THE KEYBOARD. SINCE VERSION V.60.

HANDY-NOKIA-KEYBOARD.



SC-9000 VERTICAL EXECUTION

Write a Word with two characters on the same button:→ Insert two signs after the first character with other buttons, → delete one step back with the CL-button
e.g. BACON, B and A are both on the button 2. Press for B button 2 (2x), then for excample button 1 and button 3. Display shows B1D.Now, press the button CL and B1 appears.The cursor flashes below 1 and that means you can now type in A with the button 2 (1x).

HANDY-NOKIA-KEYBOARD

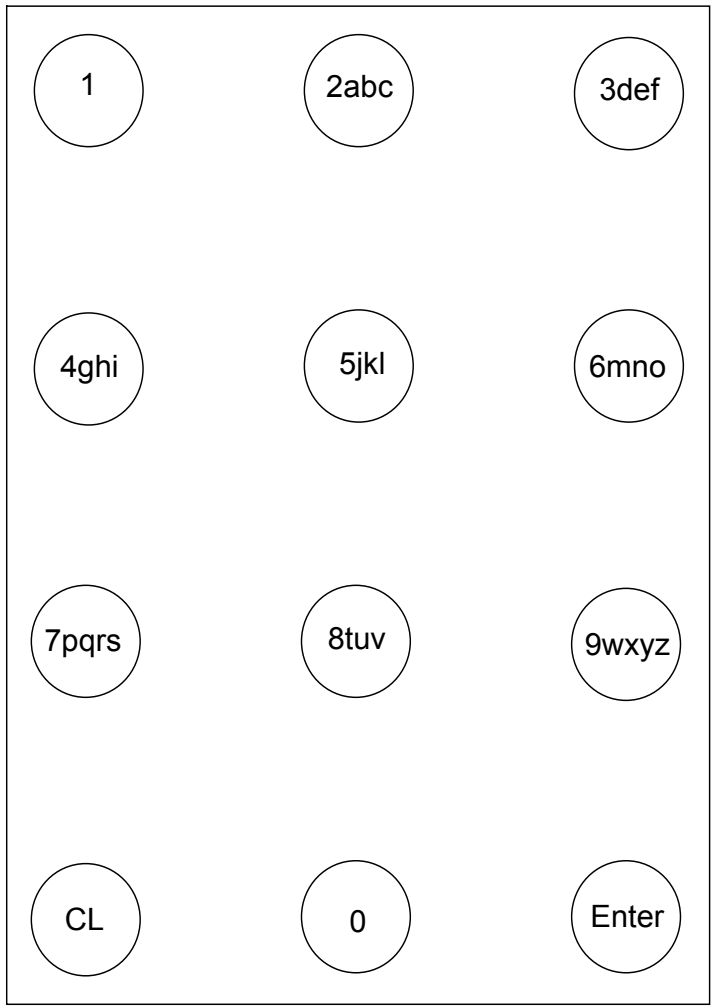

Write a Word with two characters on the same button:→ Insert two signs after the first character with other buttons, → delete one step back with the CL-button
e.g. BACON, B and A are both on the button 2. Press for B button 2 (2x), then for excample button 1 and button 3. Display shows B1D.Now, press the button CL and B1 appears.The cursor flashes below 1 and that means you can now type in A with the button 2 (1x).

SC-9000 IN HORIZONTAL EXECUTION

7. INSTRUCTIONS FOR THE USE OF EBCOM

7.1 DOS-PROGRAM

EBCOM is the „E&B-Communication-Program“ for the SC-9000. Actually this program is operated by DOS level. Beside this program a corresponding data cord is required.

7.1.1 TRANSMISSION CABLE

Allocation of DB-9 connector:

DB-9M	Connection	DB-9F
To SC-9000		With PC
1		1
2		2
3		3
4		4
5		5
6		6
7		7
8		8
9		9

7.1.2 LOAD A NEW BOOT-PROGRAM

On former processors (before 2000) whereon you load an up-to-date software, you have to load a new boot-program first. This is made fundamentally in the same way as the transfer of the basic program. In detail as follows:

The file **bstrp2.hex** should also be in the same list as ebcom.exe.

1. Bring the SC-9000 in state of communication with the PC: c=login, c= program, d=configuration, a=communication
2. Combine RS-232 interface with data cord on SC-9000 to the COM-port of PC.
3. Start ebcom.exe on the PC.
4. Choose language, choose COM-port, choose „send“ and choose number 1.
5. Register **bstrp2.hex** as file.
6. With RETURN starts the transfer
7. After the end of data transmission SC-9000 shows a white screen.
8. Make the processor de-energized for 30 seconds. Then start again, the screen remains white.
9. Now transmit the basic software.

7.1.3 LOADING OF BASIC SOFTWARE

The practicing file **axxxhard.hex** should also be in the same list as ebcom.exe (or a hard.hex file with another name?).

1. Bring the SC-9000 in state of communication with PC: c=login, c= program, d=configuration, a=communication
2. Combine RS-232 interface with data cord on SC-9000 to the COM-port of the PC.
3. Start ebcom.exe on the PC.
4. Choose language, choose COM-port, choose „send“ and choose number 1.
5. With RETURN starts the transfer. (Register with file-name **hardxx?.hex** provided that another name as axxxhard.hex was chosen)
6. After the end of data transmission the SC-9000 makes a reset. Quit the error indication with „E“.

The SC-9000 should now have the new version. Before it can be started with a program, service variable 4 must be quitted.

7.1.4 TO RECEIVE PROGRAM DATA (TECHNOLOGICAL PROGRAMS, PROGRAMMED BY CUSTOMERS)

1. Bring the SC-9000 in state of communication with PC: c=login, c= program, d=configuration, a=communication
2. Combine RS-232 interface with data cord on the SC-9000 to the COM-port of the PC.
3. Start ebcom.exe on the PC.
4. Choose language, choose COM-port, choose „send“ and choose number 3.
5. With RETURN starts the transfer.
6. After the end of data transfer appears in the directory – from which EBCOM has been started - a file **axxxdata.hex**. It includes the programmed data of the application-programmes. These can be transmitted onto another PC.

7.1.5 PLANT TEXTS AS TITLES AND PROGRAM NAMES

To be able to indicate the title and the program names on the the SC-9000 a file **axxxtext.tx** edited correspondingly can be entered into the SC-9000. For this case, two lines for the title are available, 14 signs can be employed for the program names.

7.1.6 LOADING OF THE TEXTS

The practicing file **axxxtext.txt** should also be in the same list as ebcom.exe.

1. Bring the SC-9000 in state of communication with PC: c=login, c= program, d=configuration, a=communication
2. Combine RS-232 interface with data cord on the SC-9000 to the COM-port of the PC.
3. Start ebcom.exe on the PC.
4. Choose language, choose COM-port, choose „send“ and choose number 5.
5. With RETURN stats the transfer.
6. After the end of data transmission, the SC-9000 remains on „communication with PC“. With botton „E“ it returns to normal position.

7.1.7 FOREIGN LANGUAGE TEXTS

To indicate any foreign language on the SC-9000 (exception Cyrillic, Japanese and similar languages) a file **axxxusys.txt** can be edited correspondingly.

Loading a foreign language file:

The practicing file **axxxusys.txt** should also be in the same list as ebcom.exe.

1. Bring the SC-9000 in state of communication with PC: c=login, c= program, d=configuration, a=communication
2. Combine RS-232 interface with data cord on the SC-9000 to the COM-port of the PC.
3. Start ebcom.exe on the PC.
4. Choose language, choose COM-port, choose „send“ and choose number 4.
5. With RETURN starts the transfer.
6. After the end of data transmission, the SC-9000 remains on „communication with PC“. With botton „E“ it returns to normal position.

8. EBCOM-WINDOWS-PROGRAM

Before data can be transmitted to the SC-9000, it has to be put into the state "connection with PC". This happens with the key sequence: C - C - D - A. Then a connectiion between PC and SC-9000 has to be set up. See the remark under the item EBCOM DOS PROGRAM Instruction abovementioned up in this manual. After starting EbCom Tool.exe appears the mentioned window below on the left. Under OPTIONEN/EINSTELLUNGEN can be chosen the available interface, which is disposal for a connection with the SC-9000. See window below on the right.

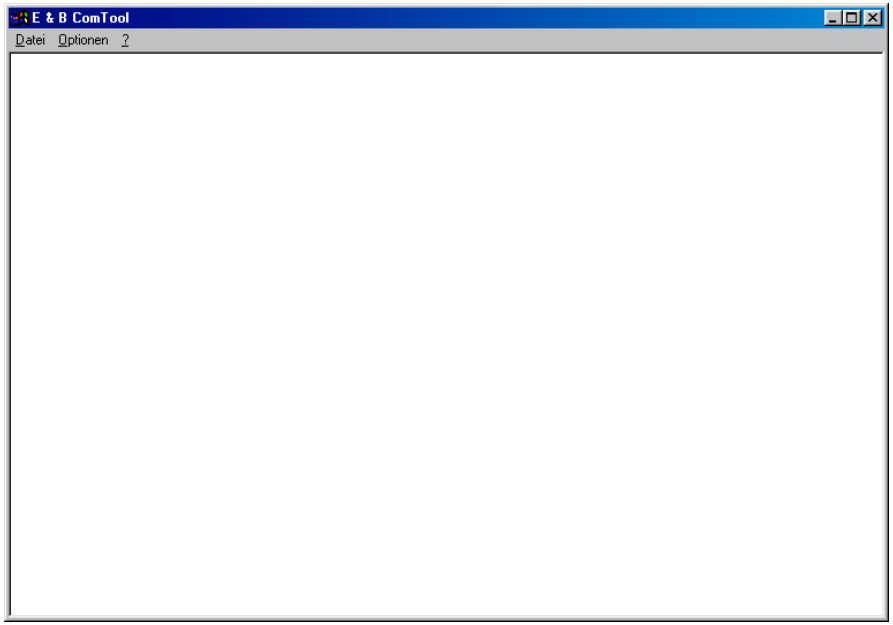

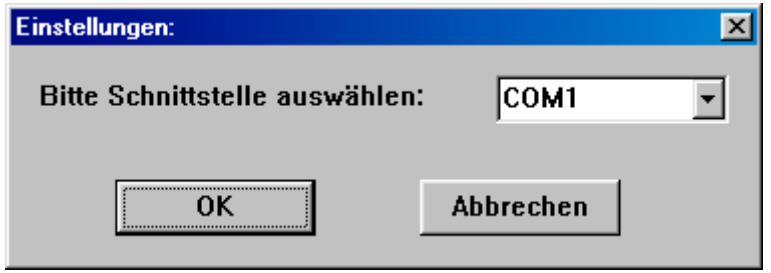

In the menue DATEI you can choose: SENDEN, EMPFANGEN or BEENDEN.
After have chosen send and recieve, following selection appears, as shown on the right.

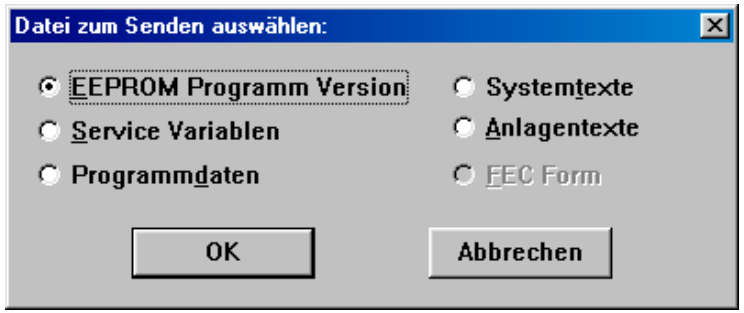

After having chosen a program point and confirmed with OK appears the display as shown on the right. There you can choose the corresponding file and start the transfer with „open“.

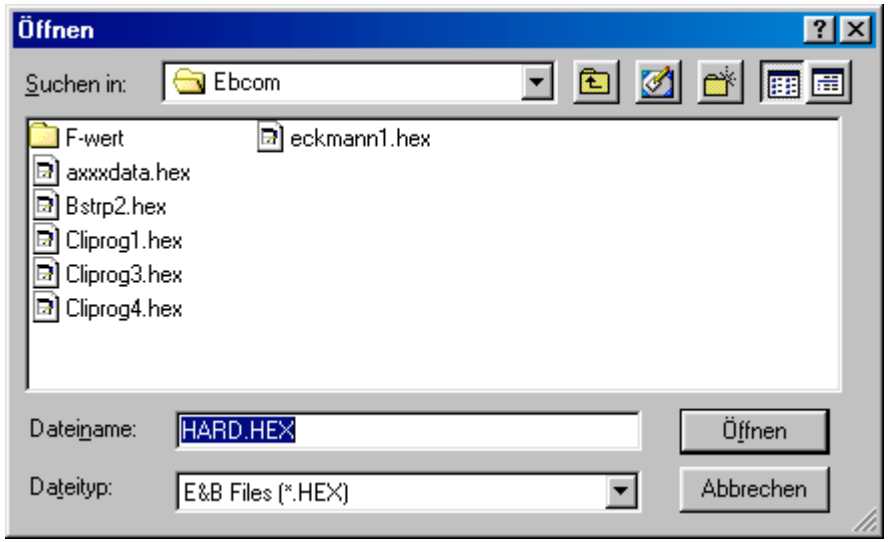

9. GENERAL MOUNTING INSTRUCTIONS FOR MICROPROCESSORS OF E&B.

Following rules are to be observed for mounting of E&B processors in new control panels for new installations. These installation rules are supposed to be to guarantee that thr E&B processors, which fulfil the strict requirements of EMU No. 89/336/EWG AND THE STANDARDS OF EN 55011,EN 61000-4-2 and EN 61000-4-4, are installed that way that no essential negative influences are to be expected.

1. Ensure a sufficient earthing of the control panel.

2. Ensure a separat derivation between the door and the control panel.

3. All temperature probes have to be wired with screen cable.

4. The screening of the temperature probe-connecting cable has to be connected to earth at the processor.

5. Digital outputs to relays and coils have to be wired corresponding to the installation-guidelines of E&B sheet 1.3.

6. Control panels - where a processor of E&B is to be installed – have to have a circuit breaker with emergency-off-function integrated in the door. The door can only be opened in the zero position of the circuit breaker. (Alternatively, an emergency-stop switch could be sufficient, depending on country rules, with a corresponding shut off device.)

7. Concerning the internal wiring of the controller with the power units component, the low voltage-guideline N° 73/23/EWG has to be fulifilled.

8. Before delivering to the end users, the control panel has to be checked according to the voltage guideline Nr.: 73/23/EWG.

9. The employed control panels have to correspond to protection type of at least IP65.

10. Processors of E&B smoke-technologies have to be installed in the control panel in such way that the connection between proicessor frame and the control panel door corresponds to protection type of at least IP65.

11. All cable inlets must be constructed correspondingly the country rules. They should lead into the control panel from below and Correspond to protection type of at least IP65.

10. MOUNTING INSTRUCTIONS FOR PROCESSORS OF E&B

10.1 SUBJECT: INTERFERENCE ELIMINATION AT SOLENOIDS

Basically, all coils which are integrated into a processor as "primary command receiver" are protected and streened by a RC-element. However, there are again and again wirings that require an interference elimination of the coils. These are all "second-command-receivers" which must receive unconditionally a separate RC-element.

The reason for the application of a RC-element is that: a magnetic coil builds up a magnetic field when pulled up. Which causes high peaks of voltage in the pilot cable when dropping and can destroy the processor.

Now the mentioned text might be explained by examples.

Example "primary-command-receiver"

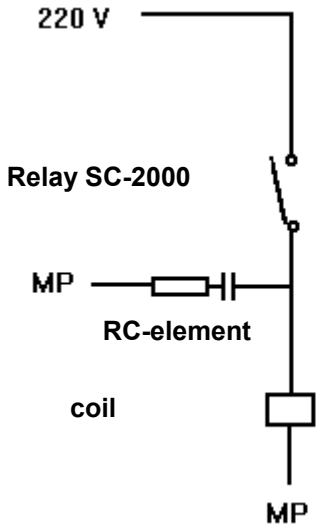

This version does not need an additional RC-element. That element integrated on the printed board is sufficient for interference elimination of the coil.

Example "secondary-command-receiver"

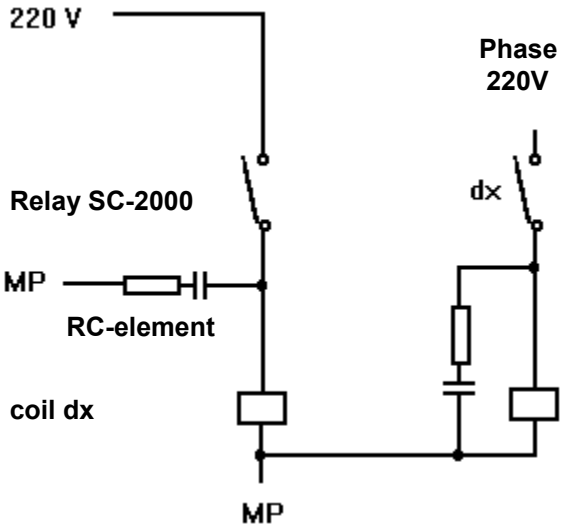

This version does need an additional RC-element. That element integrated on the printed board is NOT sufficient for inteference elimination of the additional coil, which is activated by the contactor of dx.

10.2 TO EQUALIZE TEMPERATURES AT THE SC-2000/SC-9000

10.2.1 MATERIAL

Fixed Resistance calibrated	+-	0°C
Fixed Resistance calibrated	+	95°C
Fixed Resistance calibrated	+	155°C
Fixed Water tank with about 30"C Wasser		

10.2.2 DESCRIPTION OF ADJUSTING POTENTIOMETERS

On the relay board (back side of the processor) are installed – on the upper left - three pairs of spindle potentiometers (blue). Each pair is co-ordinated to a probe input. Beginning on the left the first pair is for the core temperature, the second for the humidity temperature and the third for operating temperature. The left potentiometer is to adjust the neutral point and the right to adjust the range.

10.2.3 DESCRIPRION OF POSITIONING

Basically the processors are adjusted at factory. But because of a reason that cable length and kind of cable for the connection of the probes varies, adjustment is always necessary.

At the processor, button FII has to be pressed on SC-2000 respect. button E in the case of SC-9000. Herewith it, a status message appears on the display. The actual values of the connected probes appear in the temperature display respect. on the LCD (AEIN1, AEIN2 etc.). Please note that the actual value indication for the humidity (in %, rel.) appears as a result of temperature difference between operating temperature and humidity temperature. The absolute humidity temperature is indicated above on the display for the theoretical value.

On the terminal of the probe (at the plant), at first, the resistance with 0°C has to be connected. On the display also has to be indicated 0°C for the corresponding value. If the value is below zero, 2 or 3 small U appear. With turning the neutral points potiometer (left potentiometer of the corresponding pair) the value is brought to 0°C. For checking, the corresponding range resistance has to be connected to the chosen clamp. For core- and humidity-temperature 95°C, for operating temperature 155°C. You have to adjust correspondingly with right potiometer provided that the indicated value deviates from the resistance value.

10.2 4 DEFINITIVE ADJUSTMENT OF HUMIDITY IN % REL. HUM.

To adjust precisely the relative value, bucket with warm water, approx. 30°C, has to be set up to the probes. Humidity- and operating-probe must be put together into the water (top at same height). Thereby, a slight circling movement should be carried out. On the display, the value of rel. Hum. In % should alternate between 98% and 99%. If an other value is indicated, specificly 99% you have to re-adjust. For this purpose, you turn on the neutral-point-potiometer of the humidity probe as long as the desired value is adjusted.

10.3 RECOMMANDED OPERATION STEPS.

10.3.1 ADJUSTMENT OF THE OPERATING TEMPERATURE

1. Connect fixed resistance for 0°C instead of the probe.
2. Provided that necessary, adjust on neutral-point-potiometer
3. Connect fixed resistance for 155°C instead of the probe.
4. If necessary adjust on the range potiometer.

10.3.2 ADJUSTMENT OF THE HUMIDITY TEMPERATURE

1. Connect fixed resistance for 0°C instead of the probe.
2. Provided that necessary, adjust neutral-point-potiometer.
3. Connect fixed resistance for 95°C instead of the probe.
4. If necessary adjust on the range potiometer.

10.3.3 ADJUSTMENT OF THE CORE TEMPERATURE

1. Connect fixed resistance for 0°C instead of the probe.
2. Provided that necessary, adjust neutral -point-potiometer.
3. Connect fixed resistance for 95°C instead of the probe.
4. If necessary adjust on the range potiometer.

10.3.4 FINAL ADJUSTMENT OF RELATIVE HUMIDITY

1. Put operating- and humidity probe together into the water.
2. Adjust on the neutral-point-potiometer of the humidity probe, as long as the indication of the relative humidity alternates between 98% and 99%.

11. ADJUSTMENT OF THE TEMPERATURES ON THE SC-9000 WITH THE LARGE RELAY BOARD

C - login - C - program - B – service program - 3 –probe adjustment - A - start
Input of probe number and installation of fixed resistance for 0% respect. 0°C - A - save 0%
Installation of fixed resistance for 100% respect. 155°C - B – save 100%
C - next or direct input of probe number. Repetition of the procedure as described above from. Installation of Fixed Resistance.
Continue for all probes. Finish with E E E.

12. DESCRIPTION OF THE OPTOCOUPLER OCCUPATIONS AT THE SC-9000

These optocouplers are on the large relay board with 32 relay outputs.

Optocouplers	Relay/ Command	Clamp (-)	Clamp (+)	Examination/Action
1	25	71	51	When relay is switched-statically or dynamically - check after 5 seconds. If 24V is applied = O.K., otherwise bread off = FAULT. Announcement „OPTO1“ respect. "motor failure“. Possible „Start or Stop“
2	26	72	52	Proceed as point 1. „OPTO 2“ respect. „Sawdust failed“
3	27	73	53	Proceed as point 1. „OPTO 3“ respect. „Check shower“
4	28	74	54	Proceed as point 1. „OPTO 4“ respect. „HP steam failed“
5	29	75	55	Proceed as point 1. „OPTO 5“ respect. „HP air failed“
6	30	76	56	Proceed as point 1. „OPTO 6“ respect. „LP steam failed“
7	31	77	57	If relay is not switched and 24V is not applied, interrupt processor immediately. Announcement "OPTO 7". Possible to quit errors. Processor is in normal position.
8	32	78	58	Proceed as point 8. „OPTO 8“

The negative wire of the 24V (71-78) can be bridged. The positive is led over the corresponding potential free contact and from there to the corresponding terminal at the SC-9000. It is not urgent that a control command is connected by relay 25-32.