Räuchertechnologien AG

Operating Instructions
for the Control System

PLATIUM

E&B Smoke Technologies AG Weinfelderstrasse 8 CH-8575 Bürglen Telephone +41(0)71/634 60 50 Fax +41(0)71/634 60 55 Internet: http://www.ebsmoke.com

BASIC PLATIUM OPERATION — QUICK REFERENCE GUIDE WITHOUT PIC/CARD **4** PROGRAMMING: 4

START PROGRAM: 4
VIEW PROGRAM: 4
DURING AN ACTIVE PROGRAM “STOP”: 4
DURING AN ACTIVE PROGRAM "CHANGE REMAINING TIME": 5 DURING AN ACTIVE PROGRAM "CANCEL": 5

DURING AN ACTIVE PROGRAM "VIEW A PROGRAM": 5
ENTER SERVICE VARIABLE: 5
PERFORM INDIVIDUAL RELAY TEST: 5

CONFIGURING VARIABLES 6
VARIABLE 01 HUMIDIFICATION 6
VARIABLE 02 DEHUMIDIFICATION 7
VARIABLE 03 BUZZER 7 VARIABLE 04 ADVANCE REZ 7

VARIABLE 05 CORE TEMPERATURE ACTUAL VALUE ENABLE-/DISABLE 7 VARIABLE 06 REDUCTION OF HEATING OUTPUT 8

VARIABLE 07 HUMIDIFICATION CYCLE 8 VARIABLE 08 ADDITIONAL IGNITION REZ 8

VARIABLE 09 REDUCTION SHOWERS 8 VARIABLE 10 CLEANING INTERVAL 9

VARIABLE 11 TEST PROGRAM 9
VARIABLE 12 TEMPERATURE MONITORING ENABLE-/DISABLE. 9
VARIABLE 13 PULSE CONTROLLER HEATING A
VARIABLE 14 PULSE CONTROLLER HEATING B 10 VARIABLE 15 MINIMUM ON/OFF TIME FOR HEATING WITH OIL- AND GAS BURNER 10

VARIABLE 16 NUMBER OF FEED ADVANCES DURING PRE-IGNITION OF THE SMOKE GENERATOR 10 VARIABLE 17 ENABLE/DISABLE GLYCOL CONTROLLER 11

VARIABLE 18 GLYCOL CONTROLLER—ADJUST SUPPLY TEMPERATURE 11
VARIABLE 19 GLYCOL CONTROLLER CONTROL DELAY 11
VARIABLE 20 GLYCOL CONTROLLER TEMPERATURE MONITORING 12
VARIABLE 21 ENABLE/DISABLE ENTHALPY CONTROLLER 12
VARIABLE 22 ENTHALPY CONTROLLER TEMPERATURE HYSTERESIS 12
VARIABLE 23 ENTHALPY CONTROLLER TEMPERATURE PROPORTIONAL BAND 13 VARIABLE 24 ENTHALPY CONTROLLER HUMIDITY HYSTERESIS 13

VARIABLE 25 ENTHALPY CONTROLLER PROPORTIONAL BAND HUMIDITY 13
VARIABLE 26 ENABLE/DISABLE ADDITIONAL CORE TEMPERATURE PROBE 14
VARIABLE 27 ENABLE/DISABLE TEMPERATURE DISPLAY IN °C (CELSIUS)/°F (FAHRENHEIT) 14
VARIABLE 28 ENABLE/DISABLE DISPLAY AND ENTRY OF CART NUMBERS 14
VARIABLE 29 TIME SETPOINT FOR THE SECOND CORE TEMPERATURE PROBE 14
VARIABLE 30 ENABLE/DISABLE HUMIDITY MONITORING 15
VARIABLE 31 ENABLE/DISABLE DISPLAY OF CURRENT HUMIDITY 15
VARIABLE 32 DELTA-T FOR OUTSIDE-AIR COOLING. 15
VARIABLE 33 MAXIMUM TEMPERATURE FOR OUTSIDE-AIR COOLING. 15
VARIABLE 34 REVERSING FLAP POSITION 1 16
VARIABLE 35 REVERSING FLAP POSITION 2 16
VARIABLE 36 REVERSING FLAP POSITION 3 16
VARIABLE 37 ANALOG HUMIDITY BAND IN % 16
VARIABLE 38 DELTA-T FOR E&B COOKING 17
VARIABLE 39 SWITCHING TIME FOR CODE RSE 17
VARIABLE 40 RECORDING INTERVAL 17
VARIABLE 41 ENABLE REMOTE POWER-ON 17
VARIABLE 42 RELAY PULSE INTERVAL FOR TAK 17
VARIABLE 43 SCALE TEMPERATURE COMPENSATION TEMPERATURE LIMIT 18
VARIABLE 44 SCALE TEMPERATURE COMPENSATION FACTOR 18
VARIABLE 45 DEVICE NUMBER 18
VARIABLE 46 FAN MINIMUM FOR MATURATION RF 18
VARIABLE 47 ENABLE/DISABLE DEGREE/HOURS-VALUE DISPLAY 18

SERVICE PROGRAMS 19
SINGLE RELAY QUERY 19
AUTOMATIC RELAY QUERY CAUTION 19
CALIBRATE SENSORS 19
DATE AND TIME 20
SCREEN BRIGHTNESS/CONTRAST 20
CALIBRATE ANALOG OUTPUTS CAUTION 20

ERROR CODES - THEIR MEANING AND APPROPRIATE CORRECTIVE ACTION 20
RAM ERROR 20
ATTACHMENT ERROR 21
SENSOR ERROR 21
MOTOR MONITORING 22

ERROR 5 22
TIMER MALFUNCTION 23 TEMP. MONITORING 23

CHECKSUM ERROR 23
SERVICE VARIABLE NO. 4 24
FEED ERROR 24
GLYCOL-TEMP. ALARM 25
WATCHDOG ERROR 25
PLEASE ENTER THE DATE AND TIME 25
RELAY FAULT 25
OPTO 1 OR PIN ASSIGNMENT 25
OPTO 2 OR PIN ASSIGNMENT 26
OPTO 3 OR PIN ASSIGNMENT 26
OPTO 4 OR PIN ASSIGNMENT 26
OPTO 5 OR PIN ASSIGNMENT 27 OPTO 6 OR PIN ASSIGNMENT 27

OPTO 7 OR PIN ASSIGNMENT 28
OPTO 8 or. Assignment 28

SPECIAL ERRORS THAT DO DISPLAY ONE OF THE AFOREMENTIONED NUMBERS, BUT CANNOT BE RESOLVED IN THE MANNER DESCRIBED. 29

GENERAL INSTALLATION REQUIREMENTS FOR E&B CONTROLLERS. 30

INSTALLATION GUIDELINE FOR E&B CONTROLLERS 31

TOPIC: SUPPRESSION OF INTERFERENCE FROM SOLENOID COILS. 31

ADJUSTMENT OF TEMPERATURES ON THE PLATIUM 32

DESCRIPTION OF OPTOCOUPLER ASSIGNMENT PLATIUM 33

PLATIUM Operation - Quick Operating Instructions (without PIC/card)

PROGRAMMING:

F - LOG IN – Select a program number using the cursor – F3 F3 – Select the step number using the cursor - ENTER – Select the process code using the cursor or F1 or F2 - ENTER – Enter values*** with ENTER - F1 - NEXT STEP or F2 SAVE / END

* Entry for single-step control: At the last position of a step (under the symbol " ->¦ ") there is a 0. If the program is to interrupt the sequence after this step has completed, enter a 1 to activate single-step control. If this setting is programmed, the system will stop after this step and will wait for someone to press F1 to start the next step, or F2 to stop the program.

You may now enter a program name using the keypad. If no name is entered, the programmed program slot will be displayed as "Occupied". You may then enter the next program directly.

STARTING THE PROGRAM:

F - LOG IN - Select a program number using the cursor – F2 - If applicable, select the step number using the cursor – F1 - Press START – and, if applicable, set the preselection time - or press START – F1, if applicable select the preselection time, and press F2

VIEWING THE PROGRAM:

F - LOG IN - Select a program number using the cursor – F2 - PROGRAM OVERVIEW – F4 - If applicable, scroll – F5 F5 - RETURN to the basic screen

DURING AN ACTIVE PROGRAM: "STOP":

F - 2-MINUTE PAUSE - if applicable, restart earlier – F1 – START (For specific applications, such as HVAC systems, a different time setting may be stored.)

DURING AN ACTIVE PROGRAM "CHANGE REMAINING TIME":

F4 – MODIFY VALUES – F1 - REMAINING TIME – Select the new time using the cursor - F2 – START

DURING AN ACTIVE PROGRAM "CANCEL":

F3 – GO TO MAIN MENU – F1 - END PROGRAM

DURING AN ACTIVE PROGRAM "READ A PROGRAM":

F3 – TO THE MAIN MENU – Select a program number using the cursor – F2 – PROGRAM OVERVIEW – F5 F5 – BACK

ENTER SERVICE VARIABLE:

F3 – LOG IN – F3 – PROGRAMMING – F1 – EDIT VAR. – Select the variable number using the cursor – ENTER – Select the value using the cursor – F2 – Select the next variable number using the cursor – ENTER, etc.

PERFORM INDIVIDUAL RELAY TEST:

F3 – LOG IN – F3 – PROGRAMMING – F2 – SERVICE PROGRAM – Select INDIVIDUAL RELAY TEST using the cursor – ENTER – – Select the relay number using the cursor – F1 – START – F2 – STOP, etc. Select the next number using the cursor – F1 – START – F2 – STOP, etc. – return with F5F5-F5-F5.

CHANGE LANGUAGE:

F3 – LOG IN – F3 – PROGRAMMING – F4 – CONFIGURATION – F2 – CHANGE LANGUAGE

Setting the Variables

The controller includes several service programs that allow certain variables to be defined. These programs are described below.

The values are configured by the supplier during commissioning. However, it remains important for the system operator to be familiar with these options, as certain fault conditions may require the variables to be reset.

This program is accessed from the basic screen as follows:
Press the following keys in sequence (log in) - **"F3"** (Programming) **"F3"** (Change variable) **-"F1"**

Within this program, you may select variables no. 1–36 by using the cursor to choose a variable from the list shown on the display. Confirm your selection by pressing the "ENTER" key. In the Value field, you will see the currently set value, which you may edit using the cursor. After making changes, you must confirm by pressing the F2 key. Please note that certain variables are available only as options. Please review this with your supplier.

Variable 01 Humidification

This setting determines the opening time of the humidification valve. You may select a value between "01" and "99". The assigned value corresponds to 1/10 second per digit.

Accordingly, 99 = 9.9 seconds.

Special note: In combined smoke, cooking, and intensive cooling systems, this variable is set to 1 second per digit and is used there for humidification during the cooling phase.

Variable 02 Dehumidification

This setting determines the opening time of the fresh-air and exhaust-air dampers during dehumidification. You may select a value from "01" to "99". The assigned value corresponds to 1 second per digit.

Accordingly, 99 = 99 seconds.

Variable 03 Horn

This setting defines the duration of the horn signal at the end of the program. You may select a value from "01" to "99". The assigned value corresponds to 1 second per digit.

Accordingly, 99 = 99 seconds.

Optionally, the value may be set in minutes.

Variable 04 REZ Feed

This setting specifies the duration for which the gearbox is to run to transport the smoking material. You may select any value from "01" to "99". The assigned value corresponds to 1 second per digit.

Accordingly, 99 = 99 seconds.

Please note that the feed should always complete one full revolution.

Variable 05 Enable/Disable Actual Core Temperature Value

This activates the display of the current core temperature value, even if no target value has been programmed.

In this case, “0” = inactive and “1” = active.

Variable 06 Heating Output Reduction

This parameter defines the duration of the heating cycle for delta cooking processes. You may select a value from "01 " to "10". The assigned value corresponds to ten times the percentage value.

Accordingly, 10 = 100%.

Variable 07 Humidity Cycle

This defines the cycle duration for the humidity valve, controlled via the humidifier through the humidity controller. It is permissible to select a digit from "01" to "10". The assigned value corresponds to ten times the value in %

Accordingly, 10 = 100%.

Variable 08 Additional Ignition REZ

This defines the duration of the post-ignition time for the smoke generator. It is permissible to select a digit from "00" to "15". The assigned value corresponds to 1 minute per digit.

Accordingly, 15 = 15 minutes

Variable 09 Showering Reduction

This setting defines the duration of the shower cycle for the shower process with cyclic operation. You may select a value between "01" and "10". The assigned value corresponds to ten times the value in %

Accordingly, 10 = 100%.

Variable 10 Cleaning Interval

This setting specifies how many hours the unit may be used for smoking before the next cleaning is required. You may select a value from "01" to "99". The assigned value corresponds to 1 hour per digit.

Accordingly, 99 = 99 hours.

Variable 11 Test Program

This program is intended for self-testing only in extremely exceptional situations. Input is entered in days, hours, and minutes. For the selected duration, an internal test— not visible externally—will run and, once completed, will bring the computer to a stop. A special code is required to restart the system.

WARNING: THIS PROGRAM MAY BE OPERATED ONLY BY THE MANUFACTURER. THE OPERATOR SHALL BE RESPONSIBLE FOR ANY CONSEQUENCES RESULTING FROM UNAUTHORIZED STARTUP.

Variable 12 Enable/disable temperature monitoring.

This setting determines whether temperature monitoring is active or inactive. You may select either the digit "0" or "1 ".

"0" = inactive and "1 " = active.

Variable 13 Pulse controller, Heater A

This setting specifies how many °C below the programmed setpoint Heating Controller A is to begin its cycling behavior. A value from "00" to "50" may be selected. The assigned value corresponds to 1 °C per digit.

Accordingly, 15 = 15 °C below the setpoint.

Entering 00 disables the cycling behavior.

The configured delta T simultaneously applies to the proportional control behavior of the heating controller via analog output 1 (0-10 V) and output 5 (4-20 mA)

Variable 14 Cycling Controller, Heating B

This setting specifies how many °C before the programmed setpoint Heating Controller B is to begin cycling operation. You may select a value from "00" to "50". The assigned value corresponds to 1 °C per digit.

Accordingly, a setting of 15 equals 15 °C below the setpoint.

Entering 00 disables cycling operation.
The configured ΔT also applies to the proportional control behavior of the heating controller via analog output 1 (0–10 V) and output 5 (4–20 mA).

Variable 15 Minimum ON/OFF time for heating systems with oil and gas burners

Due to legally mandated safety requirements for oil and gas heating systems—specifically, ventilation of the system before and after operation—it is necessary to provide a minimum period during which the heater remains active or inactive. The specified time is defined in the program and cannot be modified by the operator. However, this mode may be enabled or disabled. You may select a value between the digit "0" and "1 ".

In this context, "0" = inactive and "1" = active.

Variable 16 Number of feed cycles during pre-ignition of the smoke generator

This setting specifies how many feed cycles are to be carried out during the pre-ignition phase. It is permissible to select a digit between "1 " and "9".

Accordingly, "1 " = one feed cycle and "9" = nine feed cycles.

Variable 17 Enable/Disable Glycol Controller

This setting specifies whether the control system shall operate with the glycol controller. It is permissible to select either the digit "0" or "1".

"0" = controller inactive; "1" = controller active.

Variable 18 Adjusting the Glycol Controller Supply Temperature

This setting specifies the Delta T relative to room temperature that shall be used to control the supply temperature of the glycol circuit. It is permissible to select a value between "1 " and "20".

Example: Set Delta T = 15. If the room temperature is greater than 15°C, the setpoint for the supply temperature is 0°C. If the room temperature is less than 15°C, the supply temperature is controlled as room temperature minus 15°C. The minimum value is –7°C specified.

Accordingly, "1" = 1°C Delta T and "20" = 20°C Delta T

Variable 19 Glycol Controller Control Delay

This parameter specifies after how many measurements the status of the mixing valve shall be changed. It is permissible to select a value between "1 " and "20".

For "1 ", the status changes every 6 seconds; for "20", the status changes every 120 seconds.

Variable 20 Glycol Controller Temperature Monitoring

This setting defines whether temperature monitoring of the glycol circuit is active or passive. You may select between the digits "0" and "1".

In this context, "0" = monitoring OFF and "1" = monitoring ON.

Variable 21 Enable/Disable Enthalpy Controller

This specifies whether the control system is to operate with the enthalpy controller or not. It is permissible to select either the digit "0" or "1".

In this context, "0" = controller inactive and "1" = controller active.

Variable 22 Enthalpy Controller Temperature Hysteresis

This specifies the temperature difference from the room temperature (actual value) from which outside air is used. It is permissible to select a digit between "0" and "9".

In this case, "0" corresponds to a 0°C temperature band, and "9" corresponds to a 9°C temperature band.

Variable 23 Enthalpy Controller Proportional Band Temperature

This parameter specifies the maximum deviation from the room temperature setpoint for which the fresh-air damper remains fully open. You may select a value between the digits "0" and "20".

In this context, "0" corresponds to a 0°C proportional band, and "20" corresponds to a 20°C proportional band.

Variable 24 Enthalpy Controller Humidity Hysteresis

This setting defines the humidity (actual value) deviation at which outside air is used. It is permissible to select a value between "0" and "9".

In this context, "0" corresponds to a % humidity band, and "9" corresponds to a 9% humidity band.

Variable 25 Enthalpy Controller Proportional Band — Humidity

This setting defines the deviation from the humidity setpoint up to which the fresh-air damper remains fully open. It is permissible to select a value between "0" and "20".

In this context, "0" corresponds to a 0% proportional band, and "20" corresponds to a 20% proportional band.

Variable 26 Enable/Disable Additional Core Temperature Probes

This setting defines whether the controller shall operate with additional core temperature probes. You may select either the digit "0" or "1".

In this context, "0" = OFF mode and "1" = ON mode.

Variable 27 Enable/Disable Temperature Display in °C (Celsius)/°F (Fahrenheit)

This setting defines whether the temperature shall be displayed in °C or in °F. You may select either the digit "0" or "1".

In this context, "0" indicates display in °C, and "1" indicates display in °F.

Variable 28 Enable/disable display and entry of cart numbers

This setting determines whether different cart numbers may be entered when starting a program. You may select either the digit "0" or "1".

In this context, "0" = without entering cart numbers, and "1" = with entering cart numbers.

Variable 29 Time setting for the second core temperature probe

This setting specifies how long the system shall continue cooking after the value for the second core temperature probe has been reached. You may select any digit between "1" and "59".

In this context, "1" corresponds to 1 additional minute of cooking time, and "59" corresponds to 59 additional minutes of cooking time.

Variable 30 Enable/Disable Humidity Monitoring

This setting defines whether the additional humidity monitoring is active (time during the process in which humidity exceeds 90%, expressed as a percentage of the total time). You may select a value of either "0" or "1".

In this context, "0" = inactive and "1" = active.

Variable 31 Enable/Disable Actual Humidity Display

This setting defines whether the actual humidity should always be displayed. You may select a value of either "0" or "1".

In this case, "0" means the display is disabled, and "1" means the display is enabled.

Variable 32 Delta T for outside-air cooling.

This setting specifies up to which outside-air temperature (core temperature minus Delta T) outside air is to be used. It is permitted to select a value between "0" and "20".

In this case, "0" corresponds to a 0°C Delta T, and "20" corresponds to a 20°C Delta T.

Variable 33 Maximum temperature for outside-air cooling.

This setting defines the maximum outdoor air temperature up to which it will be used. It is permissible to select a value between "0" and "40" .

In this context, "0" = maximum air temperature of 0°C, and "40" = maximum air temperature of 40°C.

Variable 34 Reversing Flap Position 1 (Cylinder-Controlled)

This setting specifies how long Position 1 remains engaged. You may select any value from "0" to "99".

In this context, "0" = no time and „99" = 99 seconds. (no relays are activated)

Variable 35 Reversing Flap Position 2 (Cylinder-Controlled)

This setting specifies how long the relays for Position 2 remain engaged. You may select any value from "0" to "99".

In this context, "0" indicates no time, and "99" indicates 99 seconds.

Variable 36 Reversing Flap Position 3 (Cylinder-Controlled)

This setting determines how long the relays for Position 3 remain engaged. It is permissible to select a digit between "0" and "99".

In this context, "0" indicates no time, and "99" indicates 99 seconds.

Variable 37 Analog Humidity Band (with FI)

This setting determines when an analog-controlled flap is opened to 100%. It is permissible to select a digit between "0" and "50".

In this context, “0” indicates no humidity band, and “50” indicates 50% above the programmed humidity setpoint.

This also provides the option to control a damper with two positions. The configured value represents 100%, and when this value is exceeded, a designated relay is activated. When 50% is exceeded, a different relay is activated.

Variable 38 Delta-T for “E&B Cooking”

This setting defines how many degrees above the core temperature the maximum chamber temperature may be permitted. A value between “0” and “50” may be selected.

In this context, “0” = no temperature differential, and “50” = 50°C above the measured core temperature.

Variable 39 Switching time for code “RSE” (Switch relay off before the end of the step.)

This setting defines how many minutes before the end of the step a relay switches off. A value between “0” and “99” may be selected.

In this context, “0” = no time, and “99” = a specified relay is switched off 99 minutes before the end of the step.

Variable 40 Recording Interval

This setting defines the interval at which data are entered into the chart. You may select a value between “1” and “99”.

“1” = one entry every second; “99” = one entry every 99 seconds.

Variable 41 Enable Remote Activation

This setting specifies whether remote activation is enabled. You may select either “0” or “1”.

“0” = no remote control; “1” = remote control enabled.

Variable 42 Pulse Interval for Code “TAK”

This setting defines the interval at which a specific relay is pulsed. You may select a value between “1” and “3000”.

For “1”, the pulse pattern is 1 second ON and 1 second OFF; for “3000”, the pulse pattern is 3000 seconds ON and 3000 seconds OFF. This variable is entered at the start of the program.

Variable 43 Scale Temperature Compensation—Temperature Limit

Variable 44 Scale Temperature Compensation—Factor

Variable 45 Device Number

This setting specifies which device number is available for IMPULS XP. It is permitted to select a value between "1" and "4".

In this context, "1" corresponds to Device Number 1, and "4" corresponds to Device Number 4.

Variable 46 Fan Minimum for “RF” tires

This setting specifies the minimum percentage at which the fan is controlled via the VFD. You may select a single digit between "0" and "99".

In this context, "0" = no output to the VFD, and "99" = 99% output to the VFD.

Variable 47 Enable/disable display of the degree/hours value

This setting specifies whether the degree/hours value is to be displayed. You may select a single digit between "0" and "1".

In this context, "0" indicates that no display is shown, and "1" indicates that the degree/hours value is displayed.

Additional service variables are added to the controllers as needed. Please request the corresponding documentation from the manufacturer.

S E R V I C E P R O G R A M

To access this program from the basic screen, please press the following keys in sequence (Log in) - **"F3"** (Programming)-**"F3"** (Service Program) **-"F2"**

Relay Test (Manual)

This function sets a specific relay on the microprocessor and triggers or verifies the corresponding system function. You may select a relay using the cursor. Each digit is assigned to a relay output. The assignment is shown on the display.

To activate the selected relay, please press the (START) key **"F1",** and to deactivate it, press the (STOP) key **-"F2".** To select the next relay, please use the cursor. This allows entry of a new digit. For safety reasons, the control system does not permit two relays to be set simultaneously.\

The switching behavior cannot be tested with this program, as the relays are set in a fixed (static) state.

Automatic Relay Test

This starts a program that, beginning with relay number 01, activates the next relay every 2 seconds. To start, press the (START) **-"F1".** The program continues to run until it is interrupted with the (STOP) **-"F2"** key.

CAUTION: THIS PROGRAM MAY ONLY BE STARTED WHEN THE POWER SECTION IS NOT ENERGIZED.

Sensor Calibration

Please refer to page 32 of this operating manual.

Date and Time

This menu is used to set the values for date and time. Press **“F2”** to activate the mode, then enter the values in sequence for day, month, year, hours, minutes, and seconds, confirming each entry with ENTER. Finally, press **“F2”** to apply the settings.

Screen Brightness and Contrast

This option allows you to adjust the display brightness and contrast to meet your requirements. Press **“F3”** and use the cursor Up/Down to change the brightness; press **“F4”** to adjust the contrast. Press **“F2”** to save the setting.

Calibrate Analog Outputs. CAUTION!

This allows the controller’s analog outputs to be calibrated. Specialized measuring instruments are required for this purpose. This service program may be performed only by E&B personnel.

ERROR CODES – THEIR MEANING AND CORRECTIVE ACTIONS

RAM Error

Based on checksum calculation and verification, the computer has detected modified data in RAM. The program or programs in which the error was found have been deleted.

ACKNOWLEDGE THE ERROR WITH **"F2"** .

The SC returns to its home position.

Reprogram the program and restart it. If the error persists, the RAM is defective and must be replaced.

TO BE HANDLED BY THE SERVICE DEPARTMENT

Restart Error

When a voltage drop occurred, the computer was unable to save the current data and therefore could not resume the program at the point where it was interrupted.

ACKNOWLEDGE THE ERROR WITH **"F2"** .

The SC returns to its home position.
The program must be restarted. If possible, please resume from the point reached at the time of the power interruption.

AUTOMATIC RESET

Sensor Fault

The temperature sensor used for measurement has an open circuit or a short circuit. The computer cannot operate under these conditions and has therefore interrupted the program sequence.

ACKNOWLEDGE THE ERROR WITH **"F2"** .

The SC displays the program step at which the fault occurred. In addition, the display associated with the defective sensor shows three or two small "u" or "c" symbols. "u" indicates a sensor short circuit. "c" indicates an open circuit (sensor interruption).

If the sensor fault can be corrected immediately, press the **"F1"** key to restart the program, or press **"F5"** to cancel.

AUTOMATIC RESET

Ignition Fault

At the start of the smoke generator's ignition sequence, the SC did not measure 220 volts at terminal 39. If the ignition rod is monitored for proper operation by a current-monitoring relay, this indicates that the smoke generator was unable to ignite. The SC interrupts the active program.

ACKNOWLEDGE THE FAULT WITH **"F2"** .

The SC displays the program step at which the fault occurred.
If the fault can be corrected immediately, restart the program with **"F1"** , or cancel it with **"F5"** .

If necessary, on certain smoke generators, embers may also be ignited using a gas burner. If this is possible, the smoking program may be started while omitting the pre-ignition.

Please proceed as follows:
1. Access the program number and acknowledge it. **"F3" - "F2"**
2. Use the cursor to select the smoking step.
3. Start the program. **"F1"**
4. Open the preset time and confirm with 0. **"F4" -** then press the **"ENTER"** key twice

RESOLUTION USUALLY REQUIRES SERVICE SUPPORT

Error 5

The controller has shut down all functions.

ACKNOWLEDGE THE FAULT WITH **"F2"** .

The SC display is blank.
When attempting to start a program, the fault is displayed again.

RESOLUTION REQUIRES CONTACTING THE MANUFACTURER OR THE SUPPLIER. ENTERING A SPECIFIC DIGIT REINITIALIZES THE COMPUTER.

Timer malfunction

The timer integrated into the device is defective. The device can no longer operate.

Acknowledge the error with **"F2"** .

Resolution by the service department.

Temperature monitoring

This error is displayed when the actual operating temperature deviates from the setpoint by 10°C or more (depending on the system, 5°C may apply) and does not move closer to the setpoint within the next 4.5 minutes (an alternative time may be configured). Additional conditions apply: The process must permit both heating and cooling. The process must not be assigned an interval. The process must not be assigned NTH or NTL; therefore, it is generally eligible for monitoring.

Acknowledge the error with **"F2"** .

The SC displays the program step at which the error occurred.
If the error can be corrected immediately, press **"F1"** to restart the program, or press **"F5"** to cancel.

IN MOST CASES, RESOLUTION CAN BE PERFORMED BY THE USER WITH ASSISTANCE FROM AN ELECTRICIAN OR A HEATING OR REFRIGERATION SPECIALIST.

Checksum error

This error appears only when a newly configured EPROM is installed in the device.

Acknowledge the error with **"F2"** .

The SC returns to its default position.
Reset the service variables using **"F3" - "F3" - "F1"** .

Service Variables

If the service variables were not configured prior to the initial start-up using **"F3" - "F3" - "F1"** this error will be displayed. It is triggered in particular by the absence of an entry for Variable 4.

Acknowledge the error using **"F2"** .

The SC returns to its home position.

Reconfigure the service variables using **"F3" - "F3" - "F1"** .

SELF-RESOLVING

Feed Fault

This fault is displayed only when the smoke system is a closed system and the safety program is enabled in the software.

If this fault occurs, it indicates that the feed behavior, or the material feed function, is not operating correctly. No voltage is present at terminal 38 during a feed pause.

Acknowledge the error using **"F2"** .

The SC displays the program step at which the fault occurred. If the fault can be corrected immediately, press **"F1"** to restart the program, or press **"F5"** to cancel.

Typically resolved independently, with the assistance of a qualified electrician.

Glycol Temperature Alarm

This error is displayed when the glycol temperature setpoint is not reached for more than 10 minutes.

Acknowledge the error with **"F2"** .

The SC indicates the program step at which the error occurred.
If the error can be corrected immediately, press **"F1"** to restart the program, or press **"F5"** to cancel.

RESOLUTION IS GENERALLY TO BE CARRIED OUT IN-HOUSE WITH THE ASSISTANCE OF A QUALIFIED ELECTRICIAN, HEATING TECHNICIAN, OR REFRIGERATION SPECIALIST.

Relay Fault

This error is displayed when the software activates a relay, but the relay does not function.

Acknowledge the error with **"F2"** .

RESOLUTION BY AUTHORIZED SERVICE PERSONNEL.

OPTO 1

This error is displayed if, within a preset time period (in seconds) after relay 25 is switched on, no 24 V is present at optocoupler 1.

Acknowledge the error with **"F2"** .

The SC indicates the program step at which the error occurred.

If the error can be corrected immediately, press **"F1"** to restart the program, or press **"F5"** to cancel.

OPTO 2

This error is displayed if no 24 V is present at optocoupler 2 within a preset time period (in seconds) after relay 26 is switched on.

Acknowledge the error with **"F2"** .

The SC indicates the program step at which the error occurred.
If the fault can be corrected immediately, press **"F1"** to restart the program, or press **"F5"** to cancel.

OPTO 3

This fault is displayed when no 24 V is present at optocoupler 3 within a preset time, in seconds, after relay 27 is switched on.

Acknowledge the error with **"F2"** .

The SC indicates the program step at which the error occurred.

If the fault can be corrected immediately, press **"F1"** to restart the program, or press **"F5"** to cancel.

OPTO 4

This error is displayed when, within a preset time in seconds after relay 28 is switched on, no 24 V is present at optocoupler 4.

Acknowledge the error with **"F2"** .

The SC indicates the program step at which the error occurred.

If the fault can be corrected immediately, press **"F1"** to restart the program, or press **"F5"** to cancel.

OPTO 5

This error is displayed if, at optocoupler 5, no 24 V is present within a preset time in seconds after relay 29 is switched on.

Acknowledge the error with **"F2"** .

The SC indicates the program step at which the error occurred.

If the fault can be corrected immediately, please press **"F1"** to restart the program, or press **"EF5"** to cancel.

OPTO 6

This fault is displayed if no 24 V is present at optocoupler 6 within a preset time (in seconds) after switching on relay 30.

Acknowledge the error with **"F2"** .

The SC indicates the program step at which the error occurred.

If the fault can be corrected immediately, please press **"F1"** to restart the program, or press **"F5"** to cancel.

OPTO 7

This error is displayed if, within a preset time in seconds after relay 31 is switched on, no 24 V is present at optocoupler 7.

ACKNOWLEDGE THE ERROR WITH **"F2"** .

The SC indicates the program step at which the error occurred.

If the fault can be remedied immediately, press **"F1"** to restart the program, or press **"F5"** to cancel.

OPTO 8

This fault is displayed when 24 V is present at optocoupler 8 while relay 32 is not energized.

ACKNOWLEDGE THE ERROR WITH **"F2"** .

The PLATIUM terminates the current program and returns to the home position.

SPECIAL ERRORS THAT DO DISPLAY ONE OF THE ABOVE NUMBERS BUT CANNOT BE CLEARED IN THE MANNER DESCRIBED.

Should this situation occur, it indicates an external interference affecting the processor. Such interference will likely cause the device to stop responding to any keyboard input. Accordingly, it cannot be acknowledged using the "F5" key. It is therefore necessary to proceed as follows:

1. SWITCH OFF THE CONTROL VOLTAGE (main switch or fuse)
2. SWITCH ON THE CONTROL VOLTAGE (main switch or fuse)

This allows the computer to reinitialize and, in all likelihood, resume normal operation.

If such an error occurs, the manufacturer or supplier should be notified without delay. In all cases, the fault originates externally and must be remedied. It is most commonly caused by a missing RC network or by loose terminal connections.

General Installation Requirements for E&B Control Systems.

When installing E&B control systems in new control cabinets for new installations, the requirements listed below shall be observed. These installation requirements are intended to ensure that equipment meeting the stringent EMC Directive No. 89/336/EEC requirements in accordance with the standards EN 55011, EN 61000-4-2, and EN 61000-4-4 is installed in such a manner that no significant adverse effects are to be expected in this regard.

1. Adequate grounding of the control cabinet shall be ensured.
2. The control-cabinet door shall be provided with a separate grounding conductor between the door and the cabinet.
3. All temperature sensors shall be wired using shielded cables.
4. The shield of the temperature-sensor connecting cables shall be bonded to earth at the controller.
5. The digital outputs to contactors and coils shall be wired in accordance with E&B Installation Guideline Sheet 1.3.
6. Control cabinets in which an E&B controller is installed shall be equipped in the door with a load disconnect switch featuring an EMERGENCY STOP function; the cabinet door may be opened only when the switch is in the OFF (0) position. (Alternatively, depending on applicable national regulations, an EMERGENCY STOP pushbutton may be sufficient; in such case, the door shall be fitted with an interlock device.)
7. For internal wiring between the controller and power components, Low Voltage Directive No. 73/23/EEC shall be observed.
8. Prior to delivery to the end customer, the control cabinet shall be inspected for compliance with Low Voltage Directive No. 73/23/EEC.
9. The control cabinets used shall meet at least IP65 protection.
10. E&B Räuchertechnologien AG controllers shall be installed in the control cabinet in such a manner that the interface between the controller frame and the control-cabinet door meets at least IP65 protection.
11. All cable entries shall be implemented in accordance with applicable national regulations. They shall enter the control cabinet from below and shall meet at least IP65 protection.

Installation Guidelines for E&B Control Systems

Subject: Suppression of Interference in Solenoid Coils.

As a general rule, all coils integrated into a control system as "primary command recipients" are protected and interference-suppressed by means of an RC network (mounted on the PCB). However, certain wiring configurations may still require additional suppression for coils. This applies to all **"secondary command recipients",** which **without exception** must be fitted with a separate RC network.

The purpose of using an RC network is that, when a coil is energized, it generates a magnetic field, which when switched off, can cause high voltage spikes on the control line. These may interfere with a microprocessor.

Example of a "Primary Command Receiver"

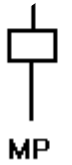

Example of a "Secondary Command Recipient"

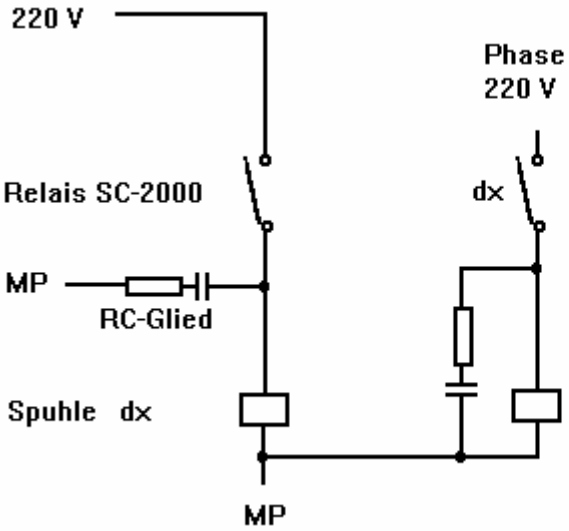

Bei dieser Ausführung ist ein zusätzliches RC-Glied notwendig. Das auf dem Print vorhandene reicht zur Entstörung der zusätzlichen Spuhle, die über den Schliesser von dx angesteuert wird, nicht aus.

Temperature Calibration on the PLATIUM

F3 – LOG IN – F3 – PROGRAM – F2 – SERVICE PROGRAMS – Select SENSOR CALIBRATION using the cursor – ENTER
Enter the sensor number and install the fixed resistor for 0% or 0°C – F1 – Save 0% Install the fixed resistor for 100% or 155°C (240°C) – F2 – Save 100% Use the cursor to select the next sensor. Repeat the procedure as previously described, starting with installation of the fixed resistor. Continue for all sensors. Exit with F5 F5 F5

Once this device calibration has been completed, the temperature must be verified by checking it in water using a reference thermometer. With long sensor cables, deviations may be observed. This requires fine calibration of the individual sensors. Please proceed as follows:

Fill a suitable container with ½ ice and ½ water. Please mix thoroughly and verify the temperature. Ice water is typically 0°C. Immerse the certified reference thermometer as well as the PLATIUM sensors in this ice water. After an adequate dwell time (approx. 2 minutes), the temperature readings of the PT-100 sensors will be stable, and the value for each individual sensor may be stored in RAM as the 0% raw value. This completes the compensation of the lead resistance.

This verification shall be performed at each commissioning and whenever any sensor is replaced.

Alternatively (if ice water is not available), an emergency method is provided. Instead of ice water, use a bucket of warm water, and measure the temperature using a suitable reference thermometer. After selecting the sensor to be calibrated, press F3 - SAVE CURRENT VALUE. Enter the measured value at the top right (after entering three digits, the decimal point is inserted automatically) and confirm with ENTER. This completes the lead compensation using this value.

Description of PLATIUM Optocoupler Terminal Assignment

These optocouplers are located on the relay board with 32 relay outputs.

Optocoupler	Relay/Command	Terminal (-)	Terminal (+)	Check/Action
1	25	65	57	If the relay is switched, whether static or dynamic, check after X seconds. If 24 V is present, OK; otherwise, shut down due to a fault. Message “OPTO 1”, or the corresponding message. Possible “Start or Stop”
2	26	65	58	Handle in the same manner as Item 1. “OPTO 2,” or the corresponding message.
3	27	65	59	Handle in the same manner as Item 1. “OPTO 3,” or the corresponding message.
4	28	65	60	Handle in the same manner as Item 1. “OPTO 4,” or the corresponding message.
5	29	65	61	Handle in the same manner as Item 1. “OPTO 5,” or the corresponding message.
6	30	65	62	Handle as described in Item 1. “OPTO 6,” or the corresponding message.
7	31	65	63	Handle as described in Item 1. “OPTO 7,” or the corresponding message.
8	32	65	64	If the relay is not switched and 24 V is present, shut down the system immediately. Message “OPTO 8,” or the corresponding message. It is possible to acknowledge the fault. The system is in its default position.

The 24 V negative is connected to terminal 65 and applies to all optocouplers. The positive is routed via the corresponding potential-free contact and from there to the respective terminal on the PLATIUM.

It is not mandatory that a control command is actually executed via relay 25–32.