RESIDENTIAL DESIGN GUIDE 2018

Toll Free - 877-782-6427
Phone - 502-992-8200
Fax - 502-812-1081

PO BOX 1520
6244 Old Lagrange Rd, STE 5
Crestwood, KY 40014

orders@quanics.net
www.quanics.net
www.quanicsstore.com

Quanics, Inc.

April 2018

Dear Friends,

My heart has always been with the onsite installer/contractors and septic service companies that are the backbone of our industry. We will always try to treat you the way we want to be treated and make buying and using Quanics' products as easy as possible.

We have made this Residential Design Guide easy to use by focusing on residential Systems under 4,000 gallons per day. In areas where wholesale distribution of our products is not available, we invite contractors to buy direct or from our website. Everywhere we have wholesale distribution we encourage contractors to buy through their local wholesaler/pre-caster.

Following the sale of the Zabel®[1] and after a ten year break, I returned to run Quanics in August of 2016. I am glad to be back, enjoying the challenge, and we are on the move.

We made several key changes over the past 21 months:

- Our AeroCell™ and BioCoir™ packed bed media filters are now NSF certified in INFILTRATOR® Water Technologies'[2] polypropylene tanks reducing the cost of our advanced treatment systems by 30%.
- Our standard ATS-8, ATS-6 can be purchased with built in recirculation dividers eliminating the need for an external recirculation device which saves material and installation labor costs.
- Our website www.Quanics.net has been completely rebuilt and we have added two onsite stores www.QuanicsStore.com and www.SepticMall.com.
- Our product line has been organized into
  - Quanics Core Products™ (a full line of components for septic and advanced onsite treatment systems), and
  - Quanics Packaged Systems™ (AeroCell™ and BioCoir™ secondary and tertiary treatment systems, sand filter kits, and packaged STEP Systems).
- We have also made internal changes, reorganizing our warehouse and assembly facility, and improving product quality and processing.

Please take a look at our new lower prices and let us know how we might serve you.

We appreciate your business.

Best Regards,

Harry M DeNoers, CEO

Quanics, Inc.

---

[1] Zabel® is a registered trademark owned by Polylok™, Wallingford, CT 06492

[2] INFILTRATOR® is a registered trademark of Infiltrator® Water Technologies, Old Saybrook, CT 06475

Toll Free - 877-782-6427
Phone - 502-992-8200
Fax - 502-812-1081

PO BOX 1520
6244 Old Lagrange Rd, STE 5
Crestwood, KY 40014

orders@quanics.net
quanics.net
quanicsstore.com

INDEX

1.1. Quanics® Residential Design Guide

1. Introduction

The information in this guide is presented to assist engineers, designers, installers, and users of advanced treatment systems to properly design, operate, and maintain AeroCell® and BioCOIR® residential treatment systems. This guide represents years of design, manufacturing, and testing of onsite

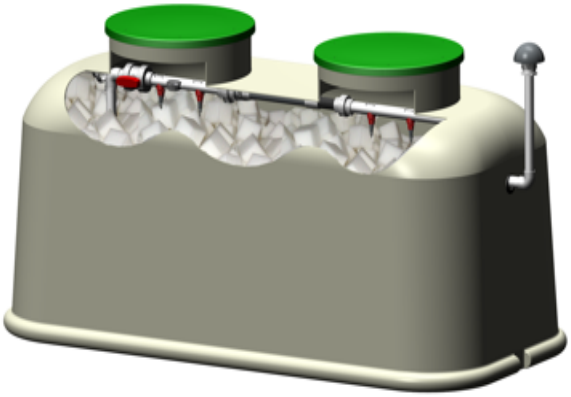

systems.

We do not view a single technology as the one and only option, but rather look to develop a wide variety of technologies that you can tailor to your individual application.

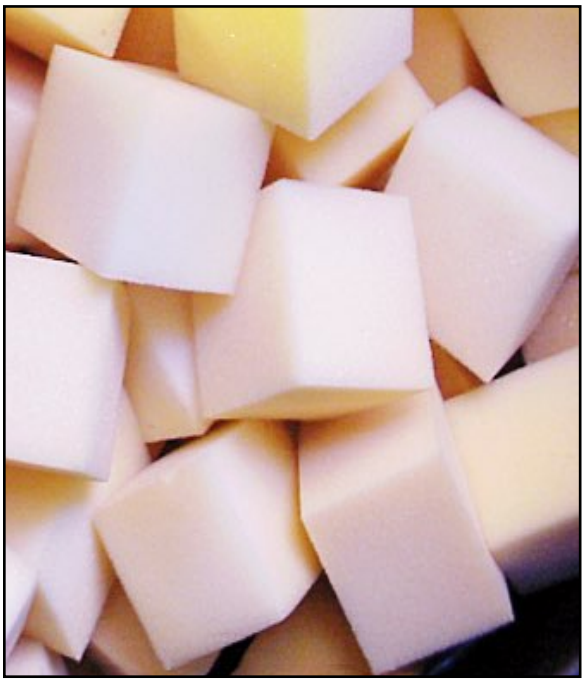

Quanics® is committed to protecting the environment by providing the best wastewater treatment solutions in the world. We provide complete environmental solutions using the latest technology, the best technical assistance and customer service. We will always strive to deliver more than we promise.

2. Treatment Process

There are four stages in the treatment process.

Septic Tank: Pretreatment of the wastewater occurs through the use of a septic tank equipped with an effluent filter on the outlet in both AeroCell® and BioCOIR® systems.

Pump Tank: The primary treated and filtered wastewater gravity flows from the septic tank into a pump/recirculation tank. A timed dosing control panel pumps the influent in short, frequent, equal doses from a pump installed in a filtered pump vault tank over a 24-hour period.

Treatment Module: Effluent sprays over the media through helical spray nozzles providing a uniform distribution over the media surface. The effluent gravity flows down through the media where it comes into contact with beneficial microorganisms that treat the wastewater to secondary and tertiary levels.

Recirculation Device: The treated effluent flows through an 80/20% recirculation device resulting in further treatment of most of the liquid while a portion is discharged. In periods of low flow, 100% of the effluent may be recirculated for additional treatment until discharge is required.

3. Packed Bed Treatment Systems

Quanics® has developed two unique recirculating packed bed treatment systems - AeroCell® and BioCOIR® - wherein microorganisms (aerobic bacteria) remove soluble contaminants from the wastewater, utilizing them as a source of energy for the growth and production of new aerobic bacteria. The extracellular enzymes solubilize the organic matter making them available to the bacteria for food. Both AeroCell® and Bio-COIR® media provide the necessary supply of

oxygen for the aerobic bacteria to live and reproduce.

Both systems operate as fixed-film media filters and share the same proprietary delivery systems. Both systems have also been demonstrated to significantly reduce total nitrogen and fecal coliform. Effluent is sprayed over the media utilizing specialized spray nozzles. This proprietary delivery system evenly distributes wastewater to achieve the desired treatment levels.

Note: The AeroCell® media achieves slightly higher performance numbers than BioCOIR®, and BioCOIR® media comes at a significantly lower cost.

AeroCell® media typically lasts well over 15 years and BioCOIR® should be replaced about every 7.5 to 10 years. Each media type has its own unique properties and both have been tested and listed under NSF/ANSI International Standard 40 Class 1. The following information will explain the differences and similarities of each system.

3.1 AeroCell® Media

The AeroCell® treatment module utilizes a proprietary high porosity, synthetic, open cell foam media for treatment. The media's large surface area and ease of microbial attachment allows for loading rates of up to ten times that of other fixed film systems. The open cell foam promotes the growth of the bacteria on the inside of the foam cubes and has a 24-year track record for effectively treating wastewater to the highest of standards.

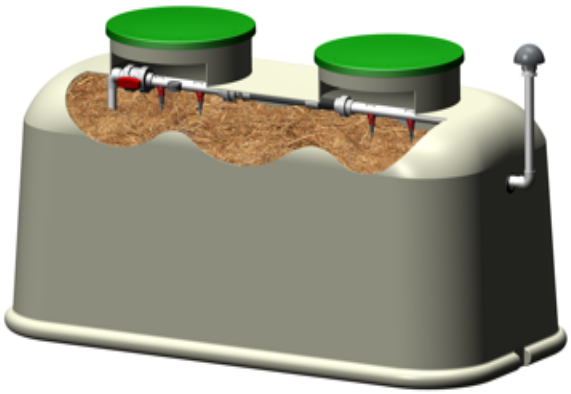

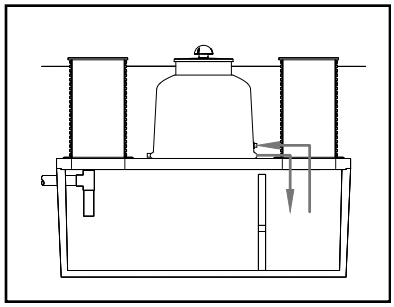

Drawing 1

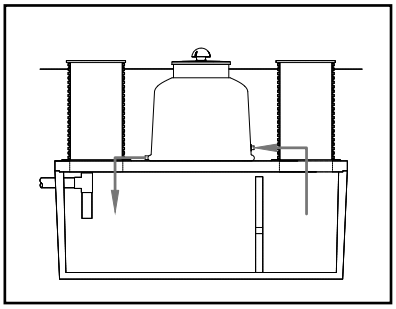

Drawing 2

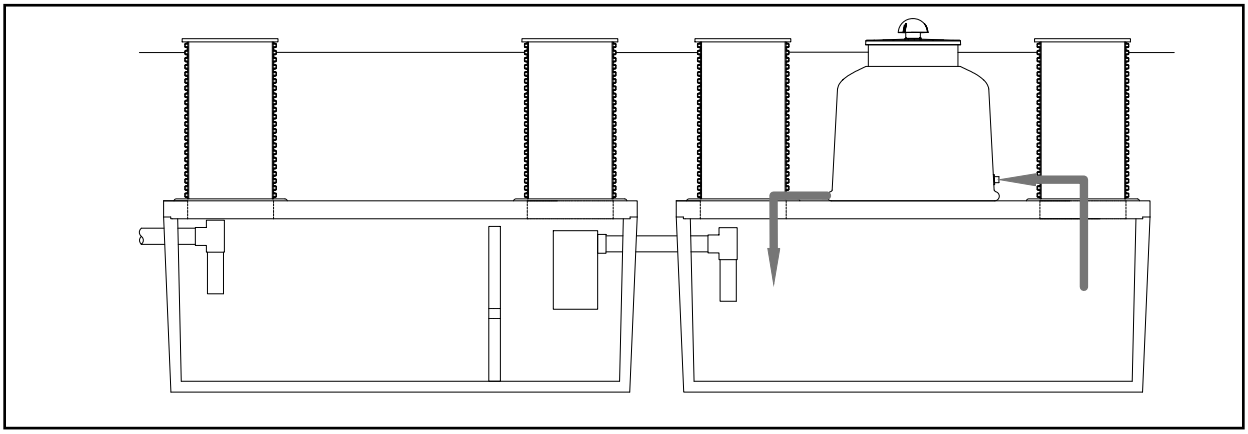

Drawing 3

Table 1: AeroCell®/BioCOIR® Packed Bed Treatment Systems-1-1-1

*AeroCell® = AC *BioCOIR® = BC PART #	Target Treatment Goal	Design Flow in GPD	Recirc GPD	Gallons Treated per Dose	Gallons Discharge per Dose	Nozzles per Module	GPM per Nozzle	GPM per Module	PSI	Nozzle Type
ATS-3-AC/BC*	Type 1	100	500	4	0.8	1	3	3	5-6	TF-14 Nozzle
	Type 2	125	625	5	1.0	1	3	3		
	Type 3	150	750	6	1.3	1	3	3		
ATS-4-AC/BC*	Type 1	175	875	7	1.5	2	3	6		
	Type 2	250	1,250	10	2.1	2	3	6		
	Type 3	300	1,500	13	2.5	2	3	6		
ATS-6-AC/BC*	Type 1	300	1,500	13	2.5	4	3	12		
	Type 2	400	2,000	17	3.3	4	3	12		
	Type 3	500	2,500	21	4.2	4	3	12		
ATS-8-AC/BC*	Type 1	500	2,500	21	4.2	4	4	16	9-10	
	Type 2	650	3,250	27	5.4	4	4	16		
	Type 3	800	4,000	33	6.7	4	4	16		
ATS-540-AC/BC*	Type 1	400	2,000	17	3.3	2	6	12	6-7	TF-20 Nozzle
	Type 2	500	2,500	21	4.2	2	6	12		
	Type 3	600	3,000	25	5.0	2	6	12		
ATS-1060-AC/BC	Type 1	900	4,500	38	7.5	3	7	21	7-8	
	Type 2	1,200	6,000	50	10.0	3	7	21		
	Type 3	1,600	8,000	67	13.3	3	7	21		
ATS-1530-AC/BC*	Type 1	1,300	6,500	54	10.8	4	8	32	9-10	
	Type 2	1,700	8,500	71	14.2	4	8	32		
	Type 3	2,000	10,000	83	16.7	4	8	32		
ATS-16-AC/BC*	Type 1	2,400	12,000	100	20.0	6	8	48		
	Type 2	3,200	16,000	133	26.7	6	8	48		
	Type 3	4,000	20,000	167	33.3	6	8	48		

Features

- Low operating costs
- Proven Sustainability
- Long lasting synthetic filter media
- 10-Year Media Warranty (20 Year optional)

3.2 BioCOIR® Media

The BioCOIR® treatment module utilizes a patented coir media for treatment. Coir refers to the fibers that constitute the thick mesocarp, or husk, of the coconut fruit. The long fibers are used for ropes, door mats, etc., leaving pith tissue and short-to medium-length fibers as waste material which accumulates in many third world countries.

The short-to medium-length fibers used in BioCOIR® are a lingo cellulosic material. The high lignin content of these fibers results in a more durable material than peat and is slow to degrade, assuring an excellent water/air ratio over a long period of time. This renewable third world resource is proven to effectively treat wastewater to secondary levels or better.

Features

- Low operating costs
- More durable than peat
- 5-Year Media Warranty (10 Year optional)
- Proven Sustainability utilizing 100% natural 3rd world renewable resource

Table 2: USEPA Residential Wastewater

Constituents	Pretreated Range
BOD_5 mg/L	155 to 286
TSS mg/L	155 to 330
Total Nitrogen (TN) mg/L	26 to 75
Ammonia (NH) mg/L	4 to 13
Total phosphorus (TP) mg/L	6 to 12
Fats, oils, and grease (FOG) mg/L	70 to 105
Fecal coliforms (FC) Col/100 mL	10^6 to 10^8

Note: Taken from USEPA Onsite Wastewater Treatment Systems Manual, 2/2002, Table 3-7

4. Treatment Modules

Quanics® has designed and manufactured a variety of module sizes in order to keep the treatment system footprint as small as possible. Unique in the industry, Quanics® manufactures models that are sized as low as

Table 3: NSF Standard 40 - Residential Wastewater

Constituents	Pretreated Range 30-day Avg.		
$CBOD_5$ mg/L	100	to	300
TSS mg/L	100	to	350
pH	6.0	to	9.0

Note: NSF Standard 40 Class 1 for residential flows from 400 to 1,500 gallons per day.

100 gallons per day for remote cabins and lake cottages in sensitive environmental locations.

Quanics® AeroCell® and Bio-COIR® modules each come in eight unique sizes. *Table 1: AeroCell®/BioCOIR® Packed Bed Treatment Systems* shows these eight module sizes with the effective loading rates of 6, 8, and 10 gallons per day per cubic foot of treatment area. Competitors that use a 'one size fits all' approach install multiple modules of the same size to handle the variation in residential flows.

5. System Layout

Quanics® Treatment Modules are designed to discharge approximately 20% of the treated effluent and return 80% either to the pump tank or the septic tank. The 80% recirculation rate means that effluent is treated five times before it is discharged. The three most common system layouts for a four-bedroom home are shown in the drawings below.

Drawing 1 shows a 1,500 gallon tank divided into a 1,000 gallon septic tank and a 500 gallon pump tank. Eighty percent of the treated effluent returns to the pump tank to be recirculated back to the treatment module.

Drawing 2 shows a 1,500 gallon tank divided into a 1,000 gallon septic tank and a 500 gallon pump tank. Eighty percent of the treated effluent returns to the influent side of the pretreatment (septic/anoxic) tank for enhanced denitrification.

Drawing 3 shows a thousand gallon septic tank and a five hundred (to 1000) gallon pump tank. Eighty percent of the treated effluent returns to the influent side of the pump tank. Enhanced denitrification can be achieved by recirculating to the influent side of the pretreatment (septic/anoxic) tank.

In all three configurations, 20% of the treated effluent is discharged with each dose.

6. Design Criteria

There are three key criteria that must be established to design an onsite system. These are Wastewater Strength, Design Flow, and required Effluent Quality.

These three key criteria determine: Tank sizes - Septic and Recirculation tank; Treatment module loading rate; Dose size and

Table 4: Quanics Residential Wastewater

Constituents	*Pretreated	**Primary Treated		
	Max	30-day Avg.	7-day Max	30-day Max
$CBOD_5$ mg/L	<300	130	200	300
TSS mg/L	<350	40	60	150
TN mg/L	<70	65	75	150
FOG mg/L	<30	20	25	25
pH	6.0 to 9.0	6.0 to 9.0		

*Pretreated: Raw wastewater prior to entering the septic tank.

**Primary Treated: Wastewater at the discharge of the septic tank.

Note: This is Quanics'® definition of pretreated/primary treated residential wastewater. If the wastewater exceeds these parameters, treatment goals may not be achieved and may require additional treatment.

Table 5: Residential Design Flow

Daily Design Flow			Tank Size	
Bedrooms	Persons	g.p.d	Septic	Recirculation
1	2	125	250	125
2	4	250	500	250
3	6	375	1000	500
4	8	500	1000	500
5	10	625	1250	625
6	12	750	1500	750

Note: Tank sizes shown are minimums. Verify tank sizing with local regulatory authority.

frequency; Pump selection; Timer settings; additional disinfection may also be required.

6.1 Wastewater Strength

What is the strength of the waste stream that needs to be treated is the first critical question to answer.

Residential strength wastewater is described as

- Pretreated: raw wastewater from a residence prior to entering the septic tank
- Primary: wastewater discharged from the septic tank

The two authoritative sources we reference in determining our definition of residential wastewater strength are:

- The USEPA Onsite Wastewater Treatment Systems Manual, 2/2002, Table 3-7, page 3-11 reports typical pretreated residential wastewater and are summarized in *Table 2: USEPA Residential Wastewater.*
- NSF defines pretreated residential wastewater in their NSF Standard 40 as shown in *Table 3: NSF Standard 40 Residential Wastewater* with flows between 400-1,500 gallons per day (g.p.d.).

  Treatment systems are affected by the strength of the incoming wastewater. This is why NSF has a prescribed pretreated range in their standard.

Quanics® defines both pretreated and primary treated wastewater in *Table 4: Quanics Residential Wastewater* acknowledging the essential role that septic tanks play in primary treatment. Quanics® Residential Wastewater must fall within the parameters as defined as Primary Treated to achieve the expected effluent quality from the treatment module.

6.2 Design Flow

The second critical question to answer: What are the daily design and peak flows?

Regulatory jurisdictions vary in their recommendations from 75 to 150 gallons a day per bedroom to calculate the hydraulic loading rate used to size residential systems. Check with your local health department or state for your onsite wastewater code. This guide focuses on residential flows less than 4,000 gallons per day.

The USEPA Manual cites a number of studies that put the median daily generation of residential wastewater per person from 50.7 to 83.5 gallons per day. The designer is required to follow the regulatory code, but should also consider the gallons per day per person usage to assure that the system is sized properly.

- Daily Design Flow:

  Table 5: Residential Design Flow outlines Quanics® daily design flow for residential systems up to 6 bedrooms.

Table 6: Loading Rates and Effluent Quality

	Media g.p.d./ ft^3	$CBOD_5$ (mg/L)	TSS (mg/L)	*TN (mg/L)
AeroCell®	6	2	2	10
	8	15	15	15
	10	25	30	NA
BioCoir®	6	10	10	10

Note: This table is a composite of many tests including, but not limited to those reported in the Appendix of this manual.
*TN based on return to 1st compartment of the septic tank. See Drawing 2.

Table 7: NSF Standard 40

Constituents	Treatment Standard	
	30-day Avg.	7-day Avg.
$CBOD_5$ mg/L	25	40
TSS mg/L	30	45
pH	6 to 9	

Note: NSF Standard 40 Class 1 for residential flows from 400 to 1,500 gallons per day.

Daily residential flows can range from a one

bedroom cabin to an apartment complex with many residents. Residential flows with less than 4,000 g.p.d.* may be treated by choosing one of eight single treatment modules with two types of media (see *Table 6: Loading Rates & Effluent Quality*). Systems greater than 6 bedrooms (12 persons) should be calculated based on 62.5 g.p.d. per person.

- Peak-flow:

  Peak flow is defined as twice the daily flow. Quanics® treatment systems can handle peak-flows of two times the daily rate for short periods of time (limited to no more than once a week or three times in a 30 day period) without affecting long term performance. Sustained high flows in any treatment system may result in system failure. This is a particularly critical factor in rental properties.

**Note: Systems larger than 4,000 g.p.d. are found in our Commercial Multi-Family Design Guide. Quanics® treatment systems can treat an unlimited wastewater flow size when properly sized and designed for residential housing, multi-family housing or community systems.*

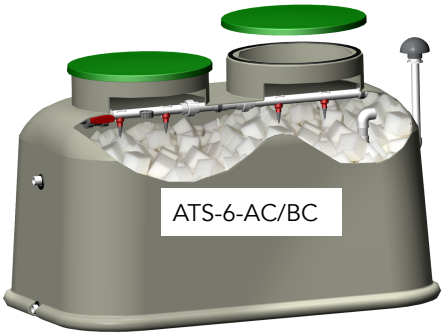

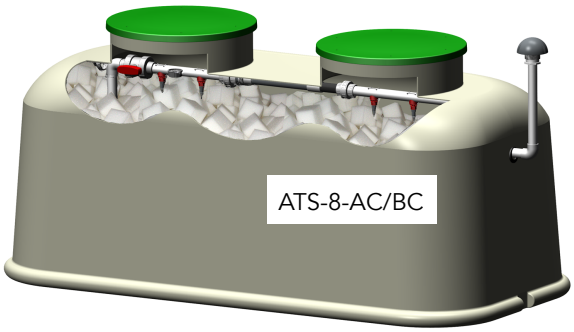

6.3 Effluent Quality

The third critical question to answer: What is the treated effluent quality that must be met by the treatment system?

The regulatory authority will set the required effluent quality that is acceptable by the receiving environment. The receiving environment may be a body of water, the ground surface, subsurface drain-field, drip, or low pressure pipe distribution.

Table 6: Loading Rates and Effluent Quality reports the loading rates required to achieve the required performance results. AeroCell® and BioCoir® loading rates are expressed in 6/8/10 gallons per day per cubic foot of media treatment space.

NSF/ANSI Standard 40's description of Class I system performance criteria says, *"The 30-day average of $CBOD_5$ concentrations of effluent samples shall not exceed 25 mg/L. The 7-day average of $CBOD_5$ concentrations of effluent samples shall not exceed 40 mg/L."* And in regards to TSS, *"The 30-day average of TSS concentrations of effluent samples shall not exceed 30 mg/L. The 7-day average of $CBOD_5$ concentrations of effluent samples shall not exceed 45 mg/L."*[1]

Whether it is NSF/ANSI Standard 40 (*see Table 3 & Table 7: NSF Standard 40*) or a more stringent secondary (plus FOG) or tertiary performance result that is required, the effluent quality

[1] NSF Standard 40

standards should always be understood within the context of a 30-day or 7-day average. One time grab samples may be informative, but are not the preferred method of sampling.

In addition, biological systems require start up time and are subject to performance fluctuations due to variations in incoming hydraulic flows or waste strength. Systems may temporarily fail to meet their performance requirements in a handful of samples, but remain well within their overall performance requirements for 7-day and 30-day averages. It is in the design phase of the project that the designer, the regulatory authorities, and the manufacturer need to agree on the treatment objectives and the component sizing.

Note: The most frequently used performance standard for residential systems of 1,500 g.p.d. or less is stated as $CBOD_5$ 25 mg/L and TSS 30 mg/L. Some jurisdictions may include additional constituents such as pH, TN, and P. Contact Quanics® for system configurations meeting these higher performance standards.

7. System Design

We will use a four bedroom house to walk through the basics of a typical System Design.

7.1 Tank Selection

Option One

- Dual Compartment Septic Tank: *Table 5: Residential Design Flow* establishes the daily design flow for a four bedroom house as 500 gallons per day. A single dual compartment tank sized to hold a minimum of two times the total design flow is required.

500 g.p.d. x 2 = 1,000 gallon minimum septic tank

Table 8B: TF-20 NOZZLE

PSI	5	6	7	8	9	10
GPM	5.8	6.3	6.8	7.3	7.8	8.3
Note: 1 PSI= 2.31 Feet of Head						

Table 8A: TF-14 NOZZLE

PSI	5	6	7	8	9	10
GPM	2.9	3.1	3.3	3.6	3.7	4.1
Note: 1 PSI= 2.31 Feet of Head						

Table 9A: SCHD 40 PVC Pipe Fitting Friction Loss of Head in Equivalent Lengths of Pipe

Type Fitting	1-1/4"	1-1/2"	2"
Threaded Adapter	3	3	3
90^0 Standard Elbow	7	8	9
Insert Coupling	3	3	3
Standard Tee	12	13	17

Table 9B: SCH 40 PVC Pipe Friction Loss of Head in Feet Due to Friction per 100 Feet of Pipe

GPM	1-1/4"	1-1/2"	2"
10	1.67	0.785	0.233
12	2.23	1.1	
14	3.1	1.46	
15			0.49
16	3.96	1.87	
18	4.93	2.33	
20	6.0	2.83	0.839
25	9.06	4.26	1.27
30	12.7	6	1.78
35	16.9	7.94	2.36
40	21.6	10.2	3.03
45		12.63	3.76
50	32.6	15.4	4.57
55		18.35	5.46
60	45.6	21.6	6.44
70	61.5	28.7	8.53
80	77.9	36.8	10.9
90	96.6	45.7	13.6
100		56.6	16.5

capacity

- Recirculation Tank: *Table 5: Residential Design Flow* establishes the recirculation tank at a minimum of one times the total design flow of the system of 500 g.p.d. (The recirculation tank should be equipped with an appropriately sized Quanics® filtered pump vault, pumps, risers, discharge assemblies, float tree, recirculation device, junction box, pressure filter and other equipment.)

  500 g.p.d. x 1 = 500 gallon minimum recirculation tank capacity

Option Two

- Combination Septic and Recirculation Tank: A single tank containing three compartments.

  Using the same calculations as above, but combining the septic and recirculation tank into one: The first compartment is 600 gallons with a baffle, and a 400 gallon second compartment with an effluent filter

Table 10: Standard Pump Selections

Pump Type	HP	G.p.m.	TDH	Electrical	Solids	Discharge
Effluent Pumps						
P-SE-13T	1/3	55	10	115V, 12FLA, 1PH, 60HZ	3/4"	1 1/2"
P-SE-41T	4/10	57	10	115V, 10FLA, 1PH, 60HZ	3/4"	1 1/2"
P-SE-12T	1/2	108	10	115V, 12FLA, 1PH, 60HZ	3/4"	2"
P-SE-10T	1	96	10	230V, 6.6FLA, IPH, 60HZ	3/4"	2"
Sewage Pumps						
P-SS-41T	4/10	57	10	115V, 12.5FLA, 1PH, 60HZ	2"	2"
P-SS-34T	3/4	96	10	115V, 13FLA, 1PH, 60HZ	2"	2"
P-SS-12T	1/2	128	10	115V, 13FLA, 1PH, 60HZ	2"	2"
Turbine Pumps						
P-TE-10	1/2	10	260	115V, 12FLA, 1PH, 60HZ	1/8"	1 1/4"
P-TE-20	1/2	20	260	115V, 12FLA, 1PH, 60HZ	1/8"	1 1/4"
P-TE-30	1/2	30	260	115V, 12FLA, 1PH, 60HZ	1/8"	1 1/4"
P-TE-50	1/2	50	260	115V, 12FLA, 1PH, 60HZ	1/8"	2"
P-TE-10+	1/2	10	250	115V, 11FLA, 1PH, 60HZ	1/8"	1 1/4"
P-TE-20+	1/2	20	250	115V, 9.5FLA, 1PH, 60HZ	1/8"	1 1/4"
P-TE-30+	1/2	30	250	115V, 9.5FLA, 1PH, 60HZ	1/8"	1 1/4"

on the outlet followed by a 500 gallon third compartment with an appropriately sized filtered pump vault, pumps, discharge assemblies, float tree, recirculation device, junction box, pressure filter and inlet and outlet risers to grade to facilitate servicing.

Note: The septic tank outlet should be equipped with an effluent filter. All inlet and outlet risers should be to grade to facilitate servicing.

7.2 Treatment Module Selection

Select the AeroCell® or Bio-COIR® module using the following steps.

- Determine the Daily Design Flow: *Table 5: Residential Design Flow* establishes the daily design flow for a four-bedroom house as 500 gallons per day.

  Daily Design Flow = 500 g.p.d.

- Identify the required Loading Rates and Effluent Quality: *Table 6: Loading Rates and Effluent Quality* indicates the most frequently used performance standard for residential systems of 1,500 g.p.d. or less is stated as $CBOD_5$ 25 mg/L and TSS 30 mg/L.

  Effluent Quality of $CBOD_5$ 25 mg/L and TSS 30 mg/L = Loading Rate of 10 g.p.d./ft^3

- Select the treatment module that matches the daily design flow, and loading rate: *Table*

Table 11A: 144 Dosing Cycles

*AeroCell® = AC	Design	Cycle	10 Min	
ATS-3-AC/BC*	100	144	1.16	8.84
	125	144	1.45	8.55
	150	144	1.74	8.26
ATS-4-AC/BC*	175	144	1.01	8.99
	250	144	1.45	8.55
	300	144	1.74	8.26
ATS-6-AC/BC*	300	144	0.87	9.13
	400	144	1.16	8.84
	500	144	1.45	8.55
ATS-8-AC/BC*	500	144	1.09	8.91
	650	144	1.41	8.59
	800	144	1.74	8.26
ATS-540-AC/BC*	500	144	1.45	8.55
	650	144	1.88	8.12
	800	144	2.31	7.69
ATS-1060-AC/BC	800	144	1.32	8.68
	1,000	144	1.65	8.35
	1,300	144	2.15	7.85
ATS-1530-AC/BC*	1,500	144	1.63	8.37
	2,000	144	2.17	7.83
	2,500	144	2.71	7.29
ATS-16-AC/BC*	2,400	144	1.74	8.26
	3,200	144	2.31	7.69
	4,000	144	2.89	7.11

Table 11B: 120 Dosing Cycles

*AeroCell® = AC	Design	Cycles	12 Min	
ATS-3-AC/BC*	100	120	1.39	10.61
	125	120	1.74	10.26
	150	120	2.08	9.92
ATS-4-AC/BC*	175	120	1.22	10.78
	250	120	1.74	10.26
	300	120	2.08	9.92
ATS-6-AC/BC*	300	120	1.04	10.96
	400	120	1.39	10.61
	500	120	1.74	10.26
ATS-8-AC/BC*	500	120	1.30	10.70
	650	120	1.69	10.31
	800	120	2.08	9.92
ATS-540-AC/BC*	500	120	1.74	10.26
	650	120	2.26	9.74
	800	120	2.78	9.22
ATS-1060-AC/BC	800	120	1.59	10.41
	1,000	120	1.98	10.02
	1,300	120	2.58	9.42
ATS-1530-AC/BC*	1,500	120	1.95	10.05
	2,000	120	2.60	9.40
	2,500	120	3.26	8.74
ATS-16-AC/BC*	2,400	120	2.08	9.92
	3,200	120	2.78	9.22
	4,000	120	3.47	8.53

1: AeroCell®/BioCOIR® Packed Bed Treatment Systems shows the treatment modules available for single family residential applications in flows from 100 to 4,000 gallons per day.

ATS-6-AC/BC meets the minimum requirement.

ATS-8-AC/BC and ATS-540-AC/BC slightly exceed the requirements

Note: The smaller module will not always be the least expensive, and in this case, module ATS-540 would be recommended based on cost.

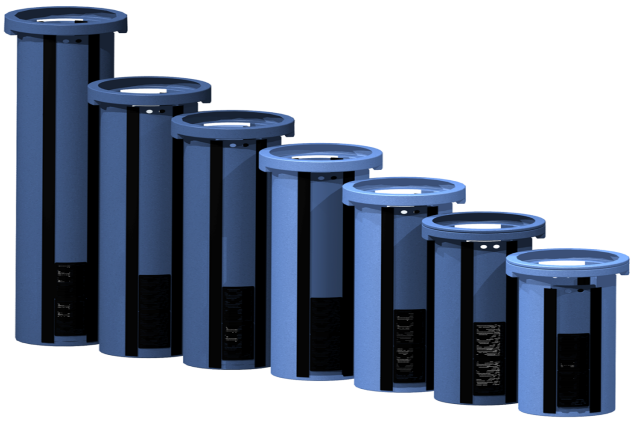

7.3 STEP System

Each STEP System consists of a high head (turbine) or low head (effluent or sewage) pump, a filtered pump vault, a simplex or duplex discharge, a junction box, a float tree, float switches, and a control panel.

- Pump Sizing: *Table 10: Standard Pump Selection* is

Table 11C: 96 Dosing Cycles

*AeroCell® = AC	Design	Cycles	15 Min
ATS-3-AC/BC*	100	96	1.74 13.26
	125	96	2.17 12.83
	150	96	2.60 12.40
ATS-4-AC/BC*	175	96	1.52 13.48
	250	96	2.17 12.83
	300	96	2.60 12.40
ATS-6-AC/BC*	300	96	1.30 13.70
	400	96	1.74 13.26
	500	96	2.17 12.83
ATS-8-AC/BC*	500	96	1.63 13.37
	650	96	2.12 12.88
	800	96	2.60 12.40
ATS-540-AC/BC*	500	96	2.17 12.83
	650	96	2.82 12.18
	800	96	3.47 11.53
ATS-1060-AC/BC	800	96	1.98 13.02
	1,000	96	2.48 12.52
	1,300	96	3.22 11.78
ATS-1530-AC/BC*	1,500	96	2.44 12.56
	2,000	96	3.26 11.74
	2,500	96	4.07 10.93
ATS-16-AC/BC*	2,400	96	2.60 12.40
	3,200	96	3.47 11.53
	4,000	96	4.34 10.66

Table 11D: 72 Dosing Cycles

*AeroCell® = AC	Design	Cycles	20 Min
ATS-3-AC/BC*	100	72	2.31 17.69
	125	72	2.89 17.11
	150	72	3.47 16.53
ATS-4-AC/BC*	175	72	2.03 17.97
	250	72	2.89 17.11
	300	72	3.47 16.53
ATS-6-AC/BC*	300	72	1.74 18.26
	400	72	2.31 17.69
	500	72	2.89 17.11
ATS-8-AC/BC*	500	72	2.17 17.83
	650	72	2.82 17.18
	800	72	3.47 16.53
ATS-540-AC/BC*	500	72	2.89 17.11
	650	72	3.76 16.24
	800	72	4.63 15.37
ATS-1060-AC/BC	800	72	2.65 17.35
	1,000	72	3.31 16.69
	1,300	72	4.30 15.70
ATS-1530-AC/BC*	1,500	72	3.26 16.74
	2,000	72	4.34 15.66
	2,500	72	5.43 14.57
ATS-16-AC/BC*	2,400	72	3.47 16.53
	3,200	72	4.63 15.37
	4,000	72	5.79 14.21

based on the gallons per minute (GPM) at the calculated total dynamic head (TDH) required to deliver the effluent to the treatment module at the proper PSI and dosing rate. We have simplified the process by providing *Table1* which includes the PSI settings required for each treatment module and the minimum GPM performance for each pump.

TDH for these systems is calculated by determining the equivalent elevation the effluent is to be pumped, while taking into account friction loss in the pipe and fittings *(Tables 9A & 9B)*, plus converting the nozzle(s) PSI to head required to deliver the desired dose *(Tables 8A & 8B)*. The ATS-540-AC module was selected above and *Table 1* indicates we will need a 12 GPM pump to achieve the correct dose per cycle.

Treatment modules and pump tanks are typically installed right next to one another which would equate to an elevation at a minimum of 12'. Measuring the length of 1-1/4" PVC pipe (say 15') and using the friction loss coefficient at 12 GPM (2.23/100 x 15) from *Table 9B* there is less than a foot of head loss due to friction. The head required to achieve 6 GPM per nozzle (6 x 2.31) equals 13.8' rounded to 14'. So TDH is 12' + 1' + 14' (plus fittings, which are few and were omitted for this calculation) for a total of 27' of TDH.

For ease of searching pump performance charts, use a minimum of 12 GPM and 30' of TDH.

A P-SE-13T meets the criteria in a submersible effluent pump. If a turbine style pump is desired, the smallest turbine style pump (P-TE-10) would be more than adequate and would need to be significantly restricted with the valve at the module to prevent overdosing the tank.

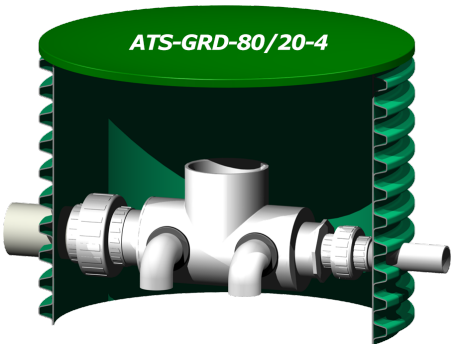

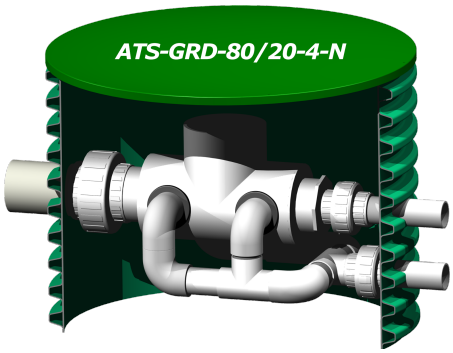

Note: Designers sometimes calculate the elevation differences between the pump and the discharge, the distance between the pump and the discharge point and add 20% to allow for the fittings. This rarely causes a problem on small single family systems. On larger systems or cluster systems, we recommend the fitting loss be calculated. Often the GPM required is much less than the pump capacity sized for the calculated TDH. It is better to size the pump for higher GPM to assure that TDH is achieved using the adjustment valve on the module to reduce the GPM to specifications in the table.

- Control Panel: The Control Panel of choice is the Simplex or Duplex Installer Friendly Series (ISF) by SJE Rhombus. When configured to work with the My Spy® [2] WiFi Messenger the customer will have both an indoor alarm, a wireless connection to their service company and a sophisticated outdoor alarm and control panel capable of handling the most demanding installations.

- Timer Setting: Virtually any treatment application can be handled with 10, 12, 15, or 20 minute cycles. We typically set effluent/sewage pumps for 96 or 72 cycles a day to reduce the wear on the pump. We set high head turbine pumps to 120/144 cycles.

  Tables A, B, C, & D include the four recommended cycles with their respective timer settings. Since we are recirculating the effluent 4:1 we calculate the treatment dose per cycle by multiplying the daily flow rate times the recirculation rate and dividing by the number of cycles.

  Example: Based on 120 cycles (24 hrs.) Daily flow rate (500 GPM) times the recirculation rate (5) equals 2,500 g.p.d. Divide 2,500 g.p.d by the number of cycles (2500/120) equals 21 gallons treated/dosed per cycle. We are dosing at 12 GPM so we divide 21/12 and we determine that we need to dose 1.75 minutes. Since our cycles (1440/120) are 12 minutes long, our off time is 10.25 minutes. We adjust for lead/lag observing the amount of time it takes to start the flow from the time the pump starts.

  We will set our timer for a 2 minute dose on, 10 minutes off.

- Filtered Pump Vaults: Quanics® has seven different sizes of Filtered Pump Vaults (FPV) from 36" to 102" in length. This variety of pump vaults assures the designer of sizing the vault to only draw from the clear middle level of the pump tank. Drawing the effluent from this clearest level plus simple to remove and clean side filtration panels makes maintenance easy. Easily maintained systems are systems that will be maintained.

7.4 Recirculation/Discharge

The AeroCell® and Bio-COIR® systems are designed to be recirculated at a 4:1 or an 80% rate. This can be achieved utilizing either gravity or pressure options. Recirculation assures proper treatment will occur and allows for the reduced footprint size of the system. The sizing information and treatment levels present in the preceding sections are based on this level of recirculation.

Quanics® has a variety of methods and products to achieve this level of recirculation and discharge.

The methods include:

- pressure recirculation utilizing ATS-PRD-4/1,
- gravity recirculation using an ATS-GRD-4/1,
- and the ATS-GRD-100/80/20 series. The ATS-GRD-100/80/20 is designed to provide 100% recirculation in times of low or no new flow into the system. This device contains a ball float that converts the device to 100% automatically. This arrangement is the ideal configuration for recirculation and should be utilized whenever possible. The 100/80/20 series of recirculation devices must be installed on the recirculation tank so that the ball float is contained within the same chamber as the treatment system dose pump.
- A nitrogen reducing recirculation device

[2] Registered trademark of SJE Rhombus

configuration is also available. The nitrogen reducing device captures the 80% discharge and routes it to the front of the pretreatment tank.

Most single family homes use the ATS-GRD-4/1-4 gravity recirculation device that is installed in a stand alone basin, or the ATS-GRD-80/20-4 that installs in the riser of the recirculation tank. It can be installed in the riser at the inlet end of the septic tank if denitrification is required.

8. Additional Considerations

Typical single family systems do not usually require more than a simple gravity discharge. The choice of pressure or gravity discharge is determined by the nature of the receiving body. Standard gravity drain-field or chamber discharge will require different considerations than (LPP) low pressure pipe or drip irrigation installations. A requirement of Ultraviolet or Chlorine disinfection will also affect the design.

Design considerations are also affected by cold weather concerns, high ground water tables, difficult soil types and additional environmental considerations. Insulated tanks and cold weather provisions are available.

Reserve Volume: This volume is used for reserve capacity in the event of a pump/power failure that provides temporary storage. The reserve volume is the space between the outlet invert and the inside top of the tank plus the reserve amount remaining above the "On" position of the float switch in the pump/recirculation tank. This volume is used for reserve in the event of a power/pump failure that provides temporary storage.

Surge Volume: Surges usually occur for no more than three or four hours. These surges are caused by heavy use periods and are offset by periods of no-flows or no-use periods. Even though flow rates are calculated in average gallons per day, the designer must be aware that there are periods of no-flow offset by periods of peak-flow that must be accounted for in the final design.

9. Cautions

It is essential that systems are designed based on accurate incoming waste strength and hydraulic loading rates. If not, there are two primary ways advanced treatment systems may be made to fail:

Advanced treatment systems are designed to treat a prescribed quality of influent or pretreated raw wastewater to a certain performance level or effluent quality. If a system is then subject to a higher strength influent for extended periods of time, the biological process in the treatment tank will not be able to keep up.

Advanced treatment systems are designed to treat a certain hydraulic load defined in gallons per day. If the system is constantly subject to hydraulic overloads in excess of the design, the biological process will be interrupted.

Quanics® AeroCell® and BioCOIR® packed bed media systems are very robust stable treatment platforms that are resistant to upset caused by influent waste strength and hydraulic overloading. This is a result of the nature of the open cell foam and coir media. But it is essential for long term performance that the treatment system be sized correctly for both biological and hydraulic loading.

Note: If the local jurisdiction requires NSF Standard 40 Class 1 Certification, please refer to the Quanics® NSF Certified System Design Guide for appropriate sizing criteria.

10. Design Check List

STEP ONE

Daily Flow Rate: _____

Influent Quality: _____

Effluent Quality: _____

Media Loading Rate: _____

STEP TWO

Septic Tank: _____

Pump Tank: _____

Risers: _____

Lids: _____

Tank Adapter: _____

STEP THREE: AeroCell®/BioCoir® Module: _____

STEP FOUR: Time Dose Frequency: _____

STEP FIVE

Pump: _____

Discharge: _____

Control Panel: _____

Pump Vault: _____

Float Tree: _____

Grommets: _____

STEP SIX: Recirculation/Discharge Method: _____