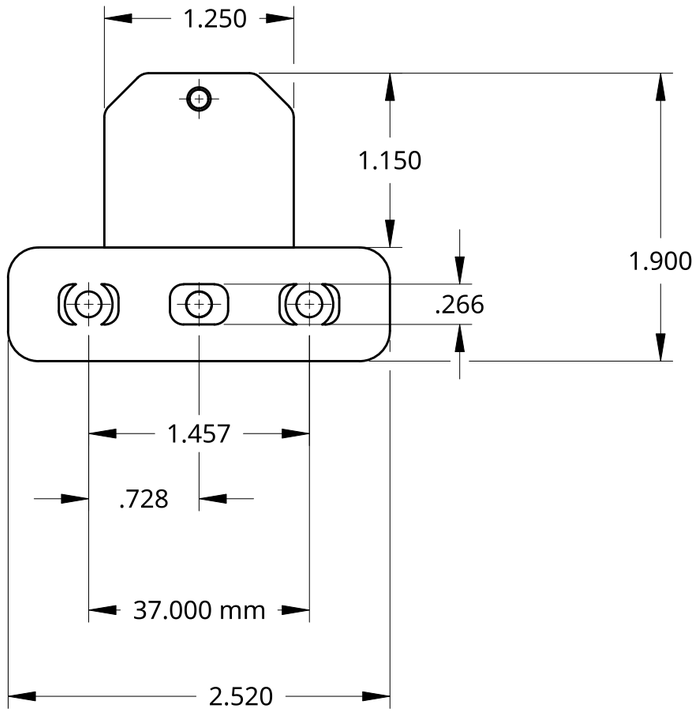

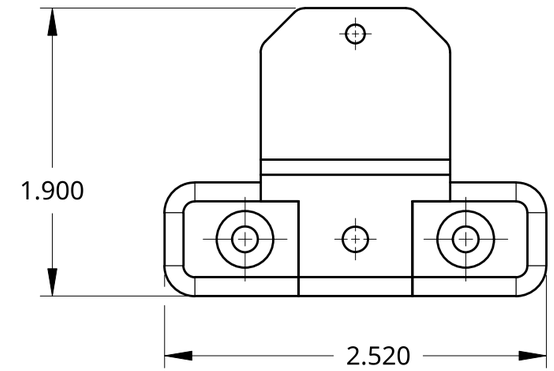

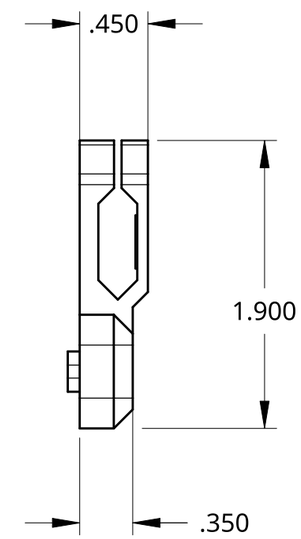

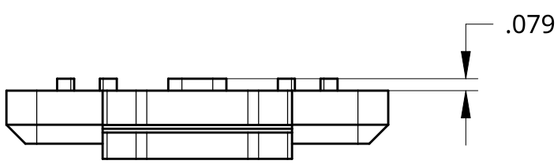

UNLESS OTHERWISE SPECIFIED,
DIMENSIONS ARE IN INCHES
.XX = ±.0-
.XXX = ±.00-
.XXXX = ±.000-
ANGULAR = ± °
FRACTIONAL = ±
SURFACE FINISH

DO NOT SCALE DRAWING

BREAK ALL SHARP EDGES AND REMOVE BURRS

THIRD ANGLE PROJECTION

	NAME	DATE
DRAWN	WILLIAM KNIGHT	04/19/2026
CHECKED		
APPROVED		

MATERIAL

FINISH

TITLE

SIZE B

DWG NO.

REV.

SCALE 1:1

WEIGHT

SHEET 1 of 1